For New Technology Network

NTN®

NTN corporation

Ball and Roller Bearings

CAT. NO. 2202-Ⅶ/E

Technical Data		A- 5
Deep Groove Ball Bearings	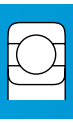	B- 5
Miniature and Extra Small Bearings	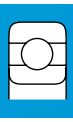	B- 31
Angular Contact Ball Bearings	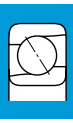	B- 43
Self-Aligning Ball Bearings	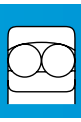	B- 79
Cylindrical Roller Bearings	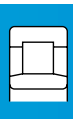	B- 91
Tapered Roller Bearings		B-133
Spherical Roller Bearings		B-233
Thrust Bearings		B-269
Locknuts, Lockwashers & Lockplates		C- 1
Catalog List & Appendix Table		D- 1

Warranty

NTN warrants, to the original purchaser only, that the delivered product which is the subject of this sale (a) will conform to drawings and specifications mutually established in writing as applicable to the contract, and (b) be free from defects in material or fabrication. The duration of this warranty is one year from date of delivery. If the buyer discovers within this period a failure of the product to conform to drawings or specifications, or a defect in material or fabrication, it must promptly notify NTN in writing. In no event shall such notification be received by NTN later than 13 months from the date of delivery. Within a reasonable time after such notification, NTN will, at its option, (a) correct any failure of the product to conform to drawings, specifications or any defect in material or workmanship, with either replacement or repair of the product, or (b) refund, in part or in whole, the purchase price. Such replacement and repair, excluding charges for labor, is at NTN's expense. All warranty service will be performed at service centers designated by NTN. These remedies are the purchaser's exclusive remedies for breach of warranty.

NTN does not warrant (a) any product, components or parts not manufactured by NTN, (b) defects caused by failure to provide a suitable installation environment for the product, (c) damage caused by use of the product for purposes other than those for which it was designed, (d) damage caused by disasters such as fire, flood, wind, and lightning, (e) damage caused by unauthorized attachments or modification, (f) damage during shipment, or (g) any other abuse or misuse by the purchaser.

THE FOREGOING WARRANTIES ARE IN LIEU OF ALL OTHER WARRANTIES, EXPRESS OR IMPLIED, INCLUDING BUT NOT LIMITED TO THE IMPLIED WARRANTIES OF MERCHANTABILITY AND FITNESS FOR A PARTICULAR PURPOSE.

In no case shall NTN be liable for any special, incidental, or consequential damages based upon breach of warranty, breach of contract, negligence, strict tort, or any other legal theory,and in no case shall total liability of NTN exceed the purchase price of the part upon which such liability is based. Such damages include, but are not limited to, loss of profits, loss of savings or revenue, loss of use of the product or any associated equipment, cost of capital, cost of any substitute equipment, facilities or services, downtime, the claims of third parties including customers, and injury to property. Some states do not allow limits on warranties, or on remedies for breach in certain transactions. In such states, the limits in this paragraph and in paragraph (2) shall apply to the extent allowable under case law and statutes in such states.

Any action for breach of warranty or any other legal theory must be commenced within 15 months following delivery of the goods.

Unless modified in a writing signed by both parties, this agreement is understood to be the complete and exclusive agreement between the parties, superceding all prior agreements, oral or written, and all other communications between the parties relating to the subject matter of this agreement. No employee of NTN or any other party is authorized to make any warranty in addition to those made in this agreement.

This agreement allocates the risks of product failure between NTN and the purchaser. This allocation is recognized by both parties and is reflected in the price of the goods. The purchaser acknowledges that it has read this agreement, understands it, and is bound by its terms.

© NTN Corporation. 2002
Although care has been taken to assure the accuracy of the data compiled in this catalog, NTN does not assume any liability to any company or person for errors or omissions.

Ball and Roller Bearings

CAD data of model numbers given in the catalog is available as an electronic catalog. For information, please contact NTN Engineering.

TECHNICAL DATA CONTENTS

1. Classification and Characteristics of Rolling Bearings ····· A-5
- 1.1 Rolling bearing construction ····· A-5
- 1.2 Classification of rolling bearings ····· A-5
- 1.3 Characteristics of rolling bearings ····· A-8

2. Bearing Selection ····· A-12
- 2.1 Bearing selection flow chart ····· A-12
- 2.2 Type and characteristics ····· A-14
- 2.3 Selection of bearing arrangement ····· A-15

3. Load Rating and Life ····· A-17
- 3.1 Bearing life ····· A-17
- 3.2 Basic rating life and basic dynamic load rating ····· A-17
- 3.3 Adjusted rating life ····· A-18
- 3.4 Machine applications and requisite life ··· A-19
- 3.5 Basic static load rating ····· A-19
- 3.6 Allowable static equivalent load ····· A-20

4. Bearing Load Calculation ····· A-21
- 4.1 Loads acting on shafts ····· A-21
- 4.2 Bearing load distribution ····· A-23
- 4.3 Mean load ····· A-24
- 4.4 Equivalent load ····· A-25
- 4.5 Bearing rating life and load calculation examples ····· A-27

5. Boundary Dimensions and Bearing Number Codes ····· A-30
- 5.1 Boundary dimensions ····· A-30
- 5.2 Bearing numbers ····· A-31

6. Bearing Tolerances ····· A-35
- 6.1 Dimensional accuracy and running accuracy ····· A-35
- 6.2 Chamfer measurements and tolerance or allowable values of tapered bore ····· A-46
- 6.3 Bearing tolerance measurement methods ····· A-48

7. Bearing Fits ····· A-49
- 7.1 Fitting ····· A-49
- 7.2 The necessity of a proper fit ····· A-49
- 7.3 Fit selection ····· A-49

8. Bearing Internal Clearance and Preload ····· A-58
- 8.1 Bearing internal clearance ····· A-58
- 8.2 Internal clearance selection ····· A-58
- 8.3 Preload ····· A-66

9. Allowable Speed ····· A-70

10. Friction and Temperature Rise ····· A-71
10.1 Friction ····· A-71
10.2 Temperature rise ····· A-71

11. Lubrication ····· A-72
11.1 Purpose of lubrication ····· A-72
11.2 Lubrication methods and characteristics ····· A-72
11.3 Grease lubrication ····· A-72
11.4 Solid grease (For bearings with solid grease) ····· A-76
11.5 Oil lubrication ····· A-77

12. External bearing sealing devices ····· A-80

13. Bearing Materials ····· A-83
13.1 Raceway and rolling element materials ····· A-83
13.2 Cage materials ····· A-83

14. Shaft and Housing Design ····· A-85
14.1 Fixing of bearings ····· A-85
14.2 Bearing fitting dimensions ····· A-86
14.3 Shaft and housing accuracy ····· A-87
14.4 Allowable bearing misalignment ····· A-87

15. Bearing Handling ····· A-88
15.1 Bearing storage ····· A-88
15.2 Installation ····· A-88
15.3 Internal clearance adjustment ····· A-90
15.4 Post installation running test ····· A-92
15.5 Bearing disassembly ····· A-92
15.6 Bearing maintenance and inspection ··· A-94

16. Bearing Damage and Corrective Measures ····· A-96

17. Technical data ····· A-100
17.1 Deep groove ball bearing radial internal clearances and axial internal clearances ····· A-100
17.2 Angular contact ball bearing axial load and axial displacement ····· A-100
17.3 Tapered roller bearing axial load and axial displacement ····· A-102
17.4 Allowable axial load for ball bearings A-102
17.5 Fitting surface pressure ····· A-103
17.6 Necessary press fit and pullout force A-104

1. Classification and Characteristics of Rolling Bearings

1.1 Rolling bearing construction

Most rolling bearings consist of rings with raceway (inner ring and outer ring), rolling elements (either balls or rollers) and cage. The cage separates the rolling elements at regular intervals, holds them in place within the inner and outer raceways, and allows them to rotate freely.

Raceway (inner ring and outer ring) or raceway disc 1)

The surface on which rolling elements roll is called the "raceway surface". The load placed on the bearing is supported by this contact surface.

Generally the inner ring fits on the axle or shaft and the outer ring on the housing.

Note 1: The raceway of thrust bearing is called "raceway disc," the inner ring is called the "shaft raceway disc" and the outer ring is called the "housing raceway disc."

Rolling elements

Rolling elements classify in two types: balls and rollers. Rollers come in four types: cylindrical, needle, tapered, and spherical.

Balls geometrically contact with the raceway surfaces of the inner and outer rings at "points", while the contact surface of rollers is a "line" contact.

Theoretically, rolling bearings are so constructed as to allow the rolling elements to rotate orbitally while also rotating on their own axes at the same time.

Cages

Cages function to maintain rolling elements at a uniform pitch so load is never applied directly to the cage and to prevent the rolling elements from falling out when handling the bearing. Types of cages differ according to way they are manufactured, and include pressed, machined and formed cages.

1.2 Classification of rolling bearings

Rolling bearings divide into two main classifications: ball bearings and roller bearings. Ball bearings are classified according to their bearing ring configurations: deep groove type and angular contact type. Roller bearings on the other hand are classified according to the shape of the rollers: cylindrical, needle, tapered and spherical.

Rolling bearings can be further classified according to the direction in which the load is applied; radial bearings carry radial loads and thrust bearings carry axial loads.

Other classification methods include: 1) number of rolling rows (single, double, or 4-row), 2) separable and non-separable, in which either the inner ring or the outer ring can be detached.

There are also bearings designed for special applications, such as: railway car journal roller bearings, ball screw support bearings, turntable bearings, as well as linear motion bearings (linear ball bearings, linear roller bearings and linear flat roller bearings).Types of rolling bearings are given in **Fig. 1.2**.

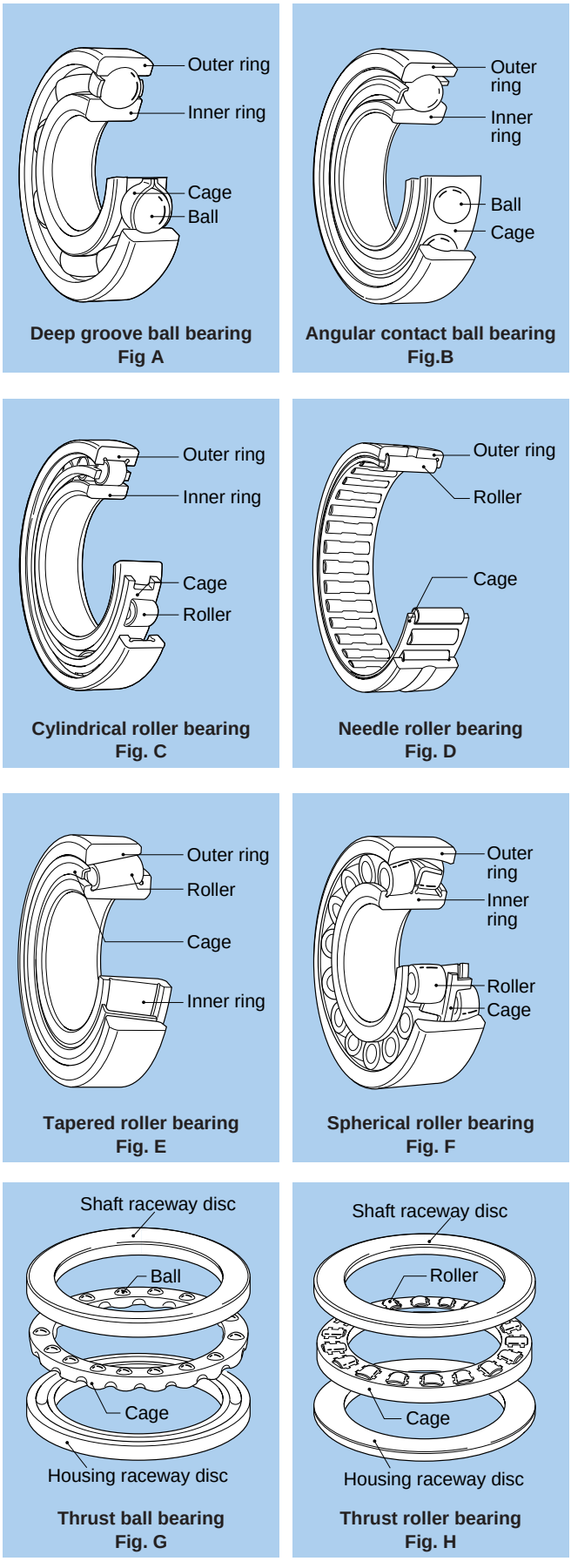

Fig. 1.1 Rolling bearing

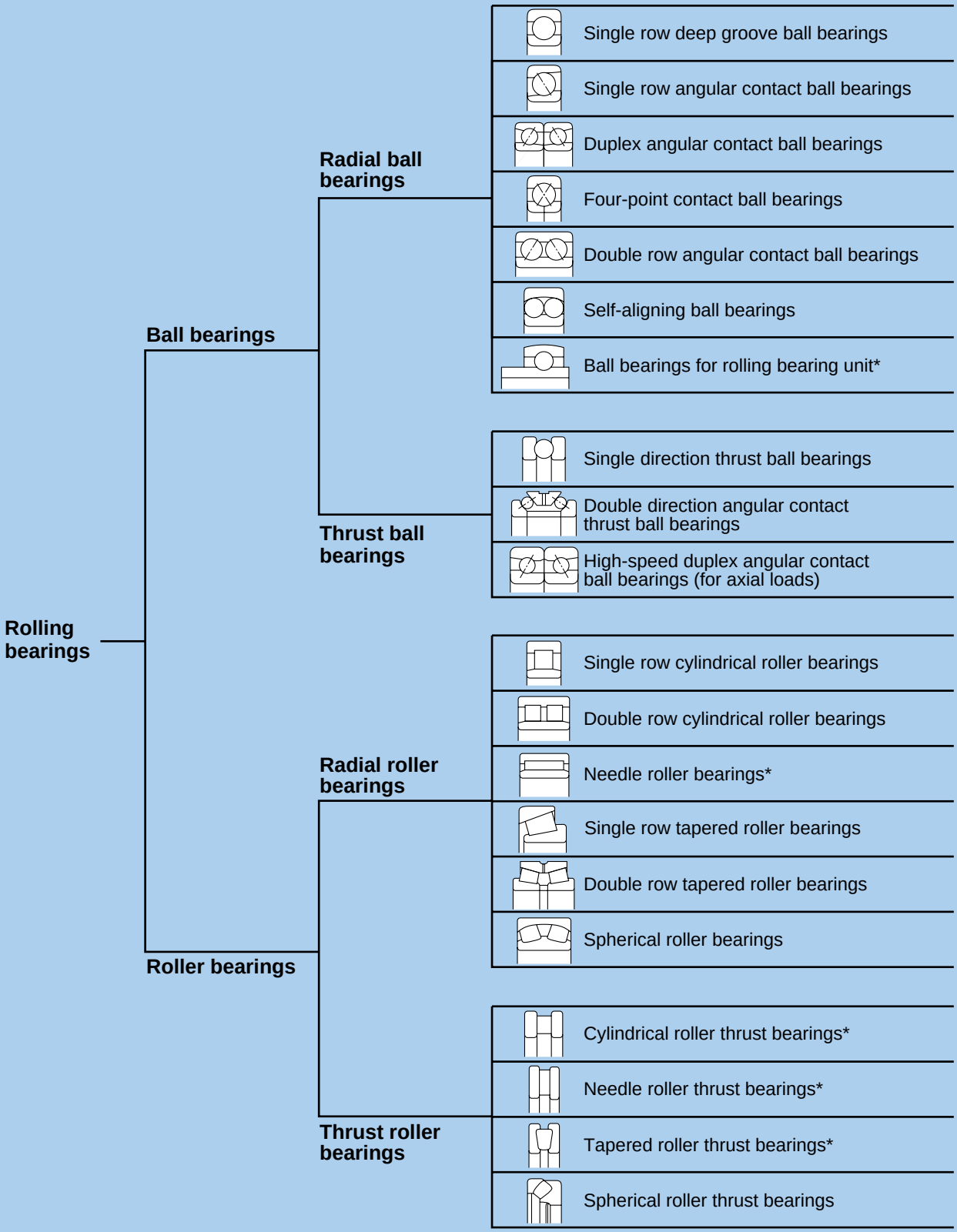

Fig. 1.2 Classification of rolling bearings

Special application bearings

	Ultra thin wall type ball bearings*
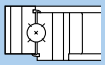	Turntable bearings*
	Ball screw support bearings*
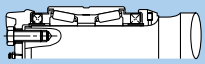	Railway car journal roller bearings*
	Ultra-clean vacuum bearings*
	SL-type cylindrical roller bearings*
	Rubber molded bearings*
	Clearance adjusting needle roller bearings*
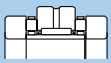	Complex bearings*
	Connecting rod needle roller bearings with cage*
	Roller followers*
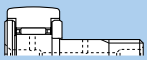	Cam followers*

Linear motion bearings

Linear ball bearings*
Linear roller bearings*
Linear flat roller bearings*

Note: Bearings marked with an asterisk are not contained in this catalog.
For details, see the catalog devoted to the concerned type of bearing.

1.3 Characteristics of rolling bearings

1.3.1 Characteristics of rolling bearings

Rolling bearings come in many shapes and varieties, each with its own distinctive features.

However, when compared with sliding bearings, rolling bearings all have the following advantages:

(1) The starting friction coefficient is lower and there is little difference between this and the dynamic friction coefficient.
(2) They are internationally standardized, interchangeable and readily obtainable.
(3) They are easy to lubricate and consume less lubricant.
(4) As a general rule, one bearing can carry both radial and axial loads at the same time.
(5) May be used in either high or low temperature applications.
(6) Bearing rigidity can be improved by preloading.

Construction, classes, and special features of rolling bearings are fully described in the boundary dimensions and bearing numbering system section.

1.3.2 Ball bearings and roller bearings

Table 1.1 gives a comparison of ball bearings and roller bearings.

Table 1.1 Comparison of ball bearings and roller bearings

	Ball bearings	Roller bearings
Contact with raceway	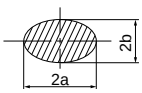 **Point contact** Contact surface is oval when load is applied.	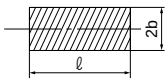 **Linear contact** Contact surface is generally rectangular when load is applied.
Characteristics	Because of point contact there is little rolling resistance, ball bearings are suitable for low torque and high-speed applications. They also have superior acoustic characteristics.	Because of linear contact, rotational torque is higher for roller bearings than for ball bearings, but rigidity is also higher.
Load capacity	Load capacity is lower for ball bearings, but radial bearings are capable of bearing loads in both the radial and axial direction.	Load capacity is higher for rolling bearings. Cylindrical roller bearings equipped with a lip can bear slight radial loads. Combining tapered roller bearings in pairs enables the bearings to bear an axial load in both directions.

1.3.3 Radial and thrust bearings

Almost all types of rolling bearings can carry both radial and axial loads at the same time.

Generally, bearings with a contact angle of less than 45 °have a much greater radial load capacity and are classed as radial bearings; whereas bearings which have a contact angle over 45 °have a greater axial load capacity and are classed as thrust bearings. There are also bearings classed as complex bearings which combine the loading characteristics of both radial and thrust bearings.

1.3.4 Standard bearings and special bearings

The boundary dimensions and shapes of bearings conforming to international standards are interchangeable and can be obtained easily and economically over the world over. It is therefore better to design mechanical equipment to use standard bearings.

However, depending on the type of machine they are to be used in, and the expected application and function, a non-standard or specially designed bearing may be best to use. Bearings that are adapted to specific applications, and "unit bearings" which are integrated (built-in) into a machine's components, and other specially designed bearings are also available.

The feature of typical standard bearings are as follows:

Deep groove ball bearings

The most common type of bearing, deep groove ball bearings are widely used in a variety of fields. Deep groove ball bearings include shield bearings and sealed bearings with grease make them easier to use.

Deep groove ball bearings also include bearings with a locating snap-ring to facilitate positioning when mounting the outer ring, expansion compensating bearings which absorb dimension variation of the bearing fitting surface due to housing temperature, and TAB bearings that are able to withstand contamination in the lubricating oil.

Table 1.2 Configuration of sealed ball bearings

Type and symbol	Shield	Sealed		
	Non-contact ZZ	Non-contact LLB	Contact LLU	Low torque LLH
Configuration	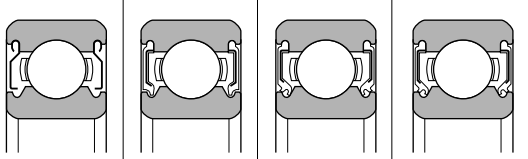			

Angular contact ball bearings

The line that unites point of contact of the inner ring, ball and outer ring runs at a certain angle (contact angle) in the radial direction. Bearings are generally designed with three contact angles.

Angular contact ball bearings can support an axial load, but cannot be used by single bearing because of the contact angle. They must instead be used in pairs or in combinations.

Angular contact ball bearings include double row angular contact ball bearings for which the inner and outer rings are combined as a single unit. The contact angle of double row angular contact ball bearings is 25˚.

There are also four-point contact bearings that can support an axial load in both directions by themselves. These bearings however require caution because problems such as excessive temperature rise and wearing could occur depending on the load conditions.

Table 1.3 Contact angle and symbol

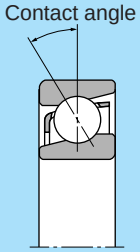

Contact angle and contact angle symbol

Contact angle	15 °	30 °	40 °
Contact angle symbol	C	A [1)]	B

Note 1: Contact angle symbol has been abbreviated as "A".

Table 1.4 Configuration of double row angular contact ball bearings

Type and symbol	Open	Shield ZZ	Non-contact sealed LLM	Contact sealed LLD
Configuration	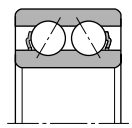	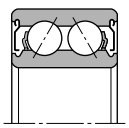	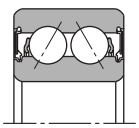	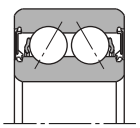

Table 1.5 Combinations of duplex angular contact ball bearings

Type and symbol	Back-to-back duplex DB	Face-to-face duplex DF	Tandem duplex DT
Configuration	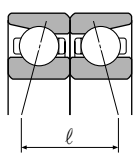	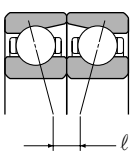	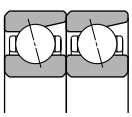

Cylindrical roller bearings

Uses rollers for rolling elements, and therefore has a high load capacity. The rollers are guided by the ribs of the inner or outer ring. The inner and outer rings can be separated to facilitate assembly, and both can be fit with shaft or housing tightly. If there is no ribs, either the inner or the outer ring can move freely in the axial direction. Cylindrical roller bearings are therefore ideal to be used as so-called "free side bearings" that absorb shaft expansion. In the case where there is a ribs, the bearing can bear a slight axial load between the end of the rollers and the ribs. Cylindrical roller bearings include the HT type which modifies the shape of roller end face and ribs for increasing axial road capacity. And the E type with a special internal design for enhancing radial load capacity. The E type is standardized for small-diameter sizes. **Table 1.6** shows the basic configuration for cylindrical roller bearings.

In addition to these, there are cylindrical roller bearings with multiple rows of rollers and the SL type of full complement roller bearing without cage.

Table 1.6 Types of cylindrical roller bearings

Type and Symbol	NU type N type	NJ type NF type	NUP type NH type (NJ+HJ)
Drawings	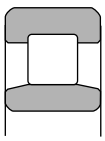 NU type	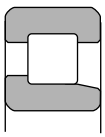 NJ type	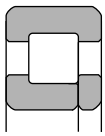 NUP type
	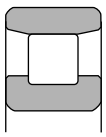 N type	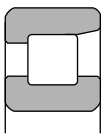 NF type	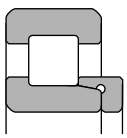 NH type

Tapered roller bearings

Tapered roller bearings are designed so the inner/outer ring raceway and apex of the tapered rollers intersect at one point on the bearing centerline. By receiving combined load from inner and outer ring, the rollers are pushed against the inner ring rib and roll guided with rib.

Induced force is produced in the axial direction when a radial load is applied, so must be handled by using a pair of bearings. The inner ring with rollers and outer ring come apart, thus facilitating mounting with clearance or preload. Assembled clearance is however hard to manage and requires special attention. Tapered roller bearings are capable of supporting large loads in both the axial and radial directions.

NTN bearings with 4T-, ET-, T- and U attached to the name conform to ISO and JIS standards for sub-unit dimensions (nominal contact angle, nominal small end diameter of outer ring) and are internationally interchangeable.

NTN also has a line of case hardened steel bearings designed for longer life (ETA-, ET-, etc.). NTN tapered roller bearings also include bearings with two and four rows of tapered rollers for extra-heavy loads.

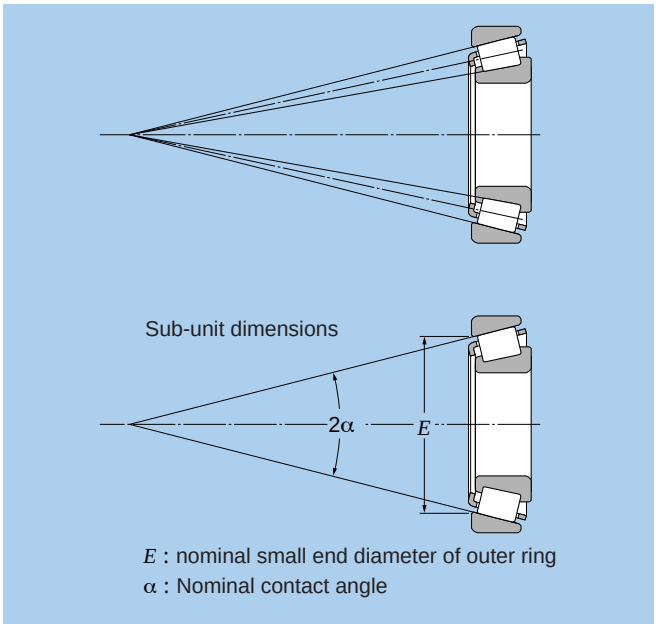

Fig. 1.3 Tapered roller bearings

Spherical roller bearings

Equipped with an outer ring with a spherical raceway surface and an inner ring which holds two rows of barrel-shaped rolling elements, NTN spherical roller bearings are able to adjust center alignment to handle inclination of the axle or shaft.

There are variety of bearing types that differ according to internal design.

Spherical roller bearings include as type equipped with an inner ring with a tapered bore. The bearing can easily be mounted on a shaft by means of an adapter or withdrawal sleeve. The bearing is capable of supporting heavy loads, and is therefore often used in industrial machinery. When heavy axial load is applied to the bearing, the load on rollers of another row is disappeared, and can cause problems. Attention must therefore be paid to operating conditions.

Table 1.7 Types of spherical roller bearings

Type	Standard (B type)	C type	213 type	E type
Configuration	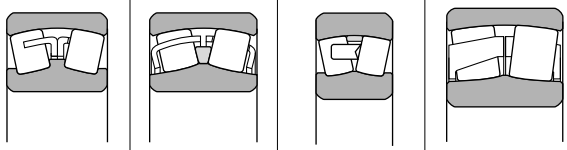			

Thrust bearings

There are many types of thrust bearings that differ according to shape of rolling element and application. Allowable rotational speed is generally low and special attention must be paid to lubrication.

In addition to the ones given below, there are various types of thrust bearings for special applications. For details, see the catalog devoted to the concerned type of bearing.

Table 1.8 Types of thrust bearings

Type	Single direction thrust ball bearing	Needle roller thrust bearing
Configuration		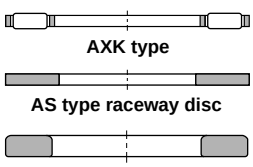 AXK type AS type raceway disc GS/WS type raceway disc
	Cylindrical roller thrust bearing	**Spherical roller thrust bearing**
		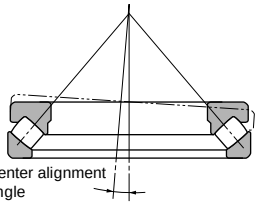 Center alignment angle

Needle roller bearings

Needle roller bearings use needle rollers as rolling elements. The needle rollers are a maximum of 5 mm in diameter and are 3 to 10 times as long as they are in diameter. Because the bearings use needle rollers as rolling elements, the cross-section is thin, but they have a high load capacity for their size. Because of the large number of rolling elements, the bearings have high rigidity and are ideally suited to wobbling or pivoting motion.

There is a profusion of types of needle roller bearings, and just a few of the most representative types are covered here. For details, see the catalog devoted to the concerned type of bearing.

Table 1.9 Main types of needle roller bearings

Type	Needle roller bearing with cage
Configuration	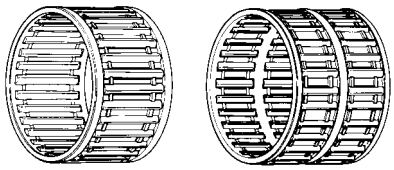
	Solid type needle roller bearings
	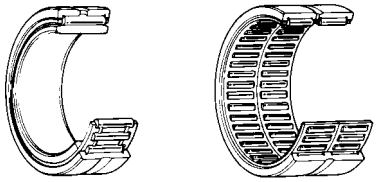
	Shell type needle roller bearings
	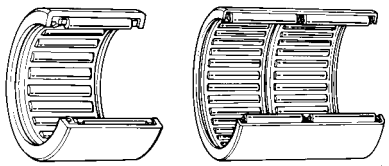
	Roller follower Cam follower
	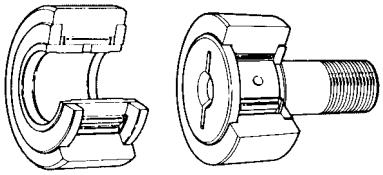

Bearing unit

A unit comprised of a ball bearing inserted into various types of housings. The housing can be bolted onto machinery and the inner ring can be easily mounted on the shaft with a set screw.

This means the bearing unit can support rotating equipment without special design to allow for mounting. A variety of standardized housing shapes is available, including pillow and flange types. The outer diameter of the bearing is spherical just like the inner diameter of the housing, so it capable of aligning itself on the shaft.

For lubrication, grease is sealed inside the bearing, and particle generation is prevented by a double seal. For details, see the catalog devoted to the concerned type of bearing.

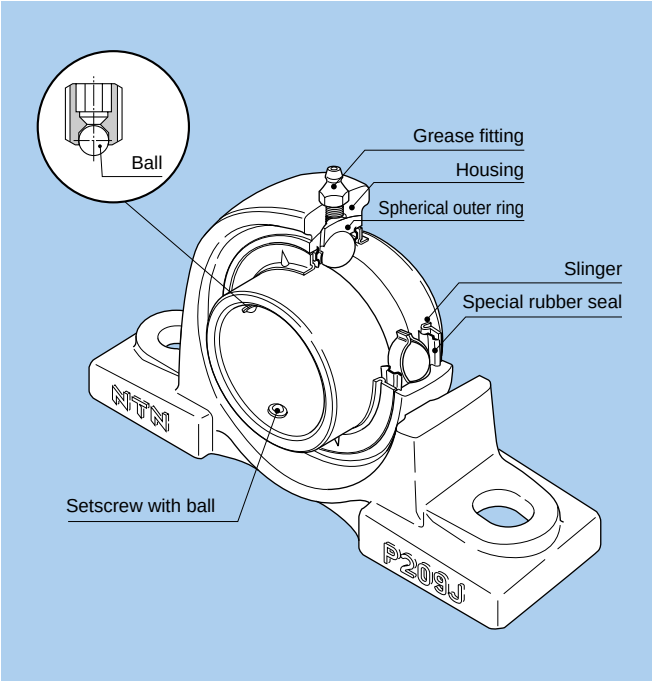

Fig. 1.4 Oil-lubricated bearing unit

2. Bearing Selection

Rolling element bearings are available in a variety of types, configurations, and sizes. When selecting the correct bearing for your application, it is important to consider several factors, and analyse in various means.

A comparison of the performance characteristics for each bearing type is shown in **Table 2.1**. As a general guideline, the basic procedure for selecting the most appropriate bearing is shown in the following flow chart.

2.1 Bearing selection flow chart

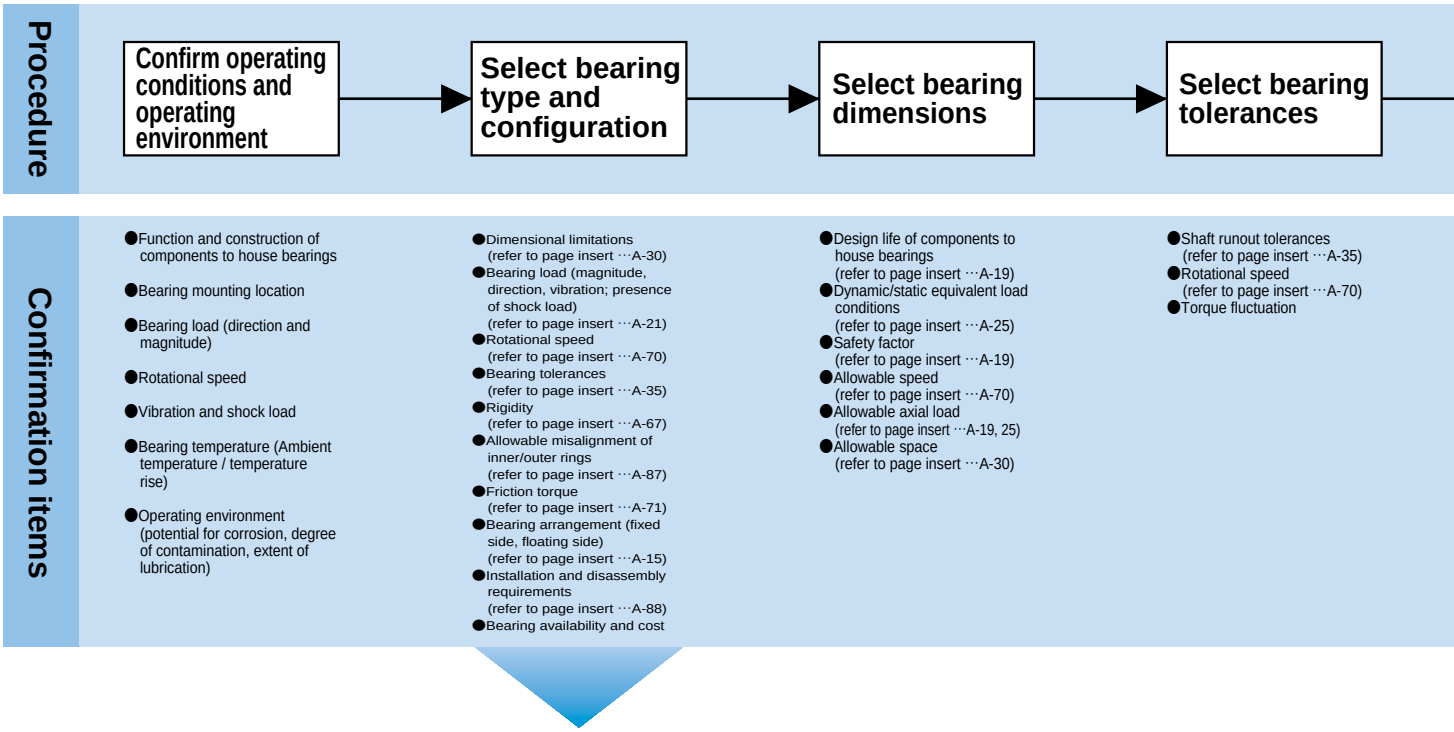

Selection of bearing type and configuration

(1) Dimensional limitations

The allowable space for bearings is generally limited. In most cases, shaft diameter (or the bearing bore diameter) has been determined according to the machine's other design specifications. Therefore, bearing's type and dimensions are determined according to bearing bore diameters. For this reason all dimension tables are organized according to standard bore diameters. There is a wide range of standardized bearing types and dimensions: the right one for a particular application can usually be found in these tables.

(2) Bearing load

The characteristics, magnitude, and direction of loads acting upon a bearing are extremely variable. In general, the basic load ratings shown in bearing dimension tables indicate their load capacity. However, in determining the appropriate bearing type, consideration must also be given to whether the acting load is a radial load only or combined radial and axial load, etc. When ball and roller bearings within the same dimension series are considered, the roller bearings have a larger load capacity and are also capable of withstanding greater vibration and shock loads.

(3) Rotational speed

The allowable speed of a bearing will differ depending upon bearing type, size, tolerances, cage type, load, lubricating conditions, and cooling conditions.

The allowable speeds listed in the bearing tables for grease and oil lubrication are for normal tolerance NTN bearings. In general, deep groove ball bearings, angular contact ball bearings, and cylindrical roller bearings are most suitable for high speed applications.

(4) Bearing tolerances

The dimensional accuracy and operating tolerances of bearings are regulated by ISO and JIS standards. For equipment requiring high tolerance shaft runout or high speed operation, bearings with Class 5 tolerance or higher are recommended. Deep groove ball bearings, angular contact ball bearings, and cylindrical roller bearings are recommended for high rotational tolerances.

(5) Rigidity

Elastic deformation occurs along the contact surfaces of a bearing's rolling elements and raceway surfaces under loading. With certain types of equipment it is necessary to reduce this deformation as much as

Select bearing's internal clearance

- Material and shape of shaft and housing (refer to page insert ···A-85)
- Fit (refer to page insert ···A-49)
- Temperature differential between inner/outer rings (refer to page insert ···A-59)
- Allowable misalignment of inner/outer rings (refer to page insert ···A-87)
- Load (magnitude, nature) (refer to page insert ···A-21)
- Amount of preload (refer to page insert ···A-66)
- Rotational speed (refer to page insert ···A-70)

Select cage type and material

- Rotational speed (refer to page insert ···A-70)
- Noise level
- Vibration and shock load
- Momentary load
- Lubrication type and method (refer to page insert ···A-72)

Select lubricant, lubrication method, sealing method

- Operating temperature (refer to page insert ···A-72)
- Rotational speed (refer to page insert ···A-70)
- Lubrication type and method (refer to page insert ···A-72)
- Sealing method (refer to page insert ···A-80)
- Maintenance and inspection (refer to page insert ···A-94)

Select any special bearing specifications

- Operating environment (high/low temperature, vacuum, pharmaceutical, etc.)
- Requirement for high reliability

Confirm handling procedures

- Installation-related dimensions (refer to page insert ···A-86)
- Installation and disassembly procedures (refer to page insert ···A-88)

possible. Roller bearings exhibit less elastic deformation than ball bearings. Furthermore, in some cases, bearings are given a load in advance (preloaded) to increase their rigidity. This procedure is commonly applied to deep groove ball bearings, angular contact ball bearings, and tapered roller bearings.

(6) Misalignment of inner and outer rings

Shaft flexure, variations in shaft or housing accuracy, and fitting errors. result in a certain degree of misalignment between the bearing's inner and outer rings. In cases where the degree of misalignment is relatively large, self-aligning ball bearings, spherical roller bearings, or bearing units with self-aligning properties are the most appropriate choices. (Refer to **Fig. 2.1**)

(7) Noise and torque levels

Rolling bearings are manufactured and processed according to high precision standards, and therefore generally produce only slight amounts of noise and torque. For applications requiring particularly low-noise or low-torque operation, deep groove ball bearings and cylindrical roller bearings are most appropriate.

(8) Installation and disassembly

Some applications require frequent disassembly and reassembly to enable periodic inspections and repairs. For such applications, bearings with separable inner/outer rings, such as cylindrical roller bearings, needle roller bearings, and tapered roller bearings are most appropriate. Incorporation of adapter sleeves simplifies the installation and disassembly of self-aligning ball bearings and spherical roller bearings with tapered bores.

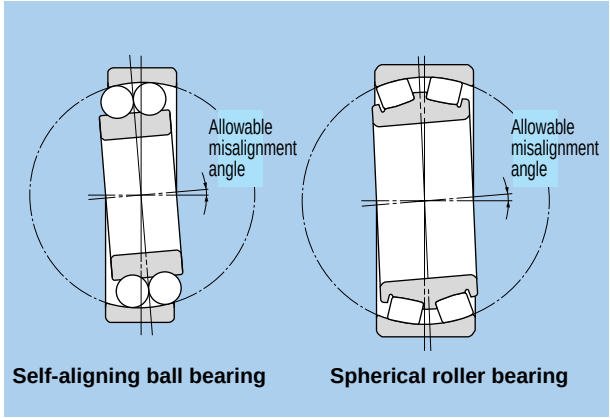

Fig. 2.1

2.2 Type and characteristics

Table 2.1 shows types and characteristics of rolling bearings.

Table 2.1 Type of rolling bearings and performance comparison

Bearing types / Characteristics	Deep groove ball bearings	Angular contact ball bearings	Double row angular contact ball bearings	Duplex angular contact ball bearings	Self-aligning ball bearings	Cylindrical roller bearings	Single-flange cylindrical roller bearings	Double-flange cylindrical roller bearings	Double row cylindrical roller bearings	Needle roller bearings
Load Carrying Capacity (Radial load / Axial load)	↕ ↔	↗	↕ ↔	↕ ↔	↕ ↔	↑	↗	↕ ↔	↑	↑
High speed ❶	☆☆☆☆	☆☆☆☆	☆☆	☆☆☆	☆☆	☆☆☆☆	☆☆☆	☆☆☆	☆☆☆	☆☆☆
High rotating accuracy ❶	☆☆☆	☆☆☆	☆☆	☆☆☆		☆☆☆	☆☆	☆	☆☆☆	
Low noise/vibration ❶	☆☆☆☆	☆☆☆		☆		☆	☆	☆	☆	☆
Low friction torque ❶	☆☆☆☆	☆☆☆		☆☆	☆	☆				
High rigidity ❶			☆☆	☆☆		☆☆	☆☆	☆☆	☆☆☆	☆☆
Vibration/shock resistance ❶			☆		★	☆☆	☆☆	☆☆	☆☆	☆☆
Allowable misalignment for inner/outer rings ❶	☆				☆☆☆	☆				
Stationary in axial direction ❷	◎	○	◎	◎ For DB and DF arrangement	◎		○	◎		
Moveable in axial direction ❸	○		○	○ For DB arrangement	○	◎			◎	◎
Separable inner/outer rings ❹						○	○	○	○	○
Inner ring tapered bore ❺					○	○			○	
Remarks		For duplex arrangement				NU, N type	NJ, NF type	NUP, NP, NH type	NNU, NN type	NA type
Reference page	B-5	B-43	B-74	B-43	B-79	B-91	B-91	B-91	B-116	E-2

Tapered roller bearings	Double-row, 4-row tapered roller bearings	Spherical roller bearings	Thrust ball bearings	Double row angular contact thrust ball bearings	Cylindrical roller thrust bearings	Spherical roller thrust bearings	Reference page	Bearing types / Characteristics
↗ ↕ ↔	↗ ↕ ↔	↗ ↕ ↔	←	↔	←	↗		Load Carrying Capacity (Radial load / Axial load)
☆☆☆	☆☆	☆☆	☆	☆☆☆	☆	☆	A-66	High speed ❶
☆☆☆	☆		☆	☆☆☆			A-31	High rotating accuracy ❶
			☆				—	Low noise/vibration ❶
							A-67	Low friction torque ❶
☆☆	☆☆☆☆	☆☆☆		☆☆	☆☆☆	☆☆☆	A-54	High rigidity ❶
☆☆	☆☆☆	☆☆☆		★	☆☆☆	☆☆☆	A-18	Vibration/shock resistance ❶
☆		☆☆☆		★	★	☆☆☆	A-79	Allowable misalignment for inner/outer rings ❶
○	◎	◎	○	◎	○	○	A-13	Stationary in axial direction ❷
	○	○	○				A-13	Moveable in axial direction ❸
○	○		○	○	○	○	—	Separable inner/outer rings ❹
		○					A-79	Inner ring tapered bore ❺
For duplex arrangement					Including needle roller thrust bearing		—	Remarks
B-133	B-133	B-233	B-269	B-269	E-48	B-269		Reference page

❶ ☆ The number of stars indicates the degree to which that bearing type displays that particular characteristic. ★ Not applicable to that bearing type.
❷ ◎ Indicates dual direction. ○ Indicates single direction axial movement only.
❸ ◎ indicates movement in the axial direction is possible for the raceway surface; ○ indicates movement in the axial direction is possible for the fitting surface of the outer ring or inner ring.
❹ ○ Indicates both inner ring and outer ring are detachable.
❺ ○ Indicates inner ring with tapered bore is possible.

2.3 Selection of bearing arrangement

Shafts or axles are generally supported by a pair of bearings in the axial and radial directions. The bearing which prevents axial movement of the shaft relative to the housing is called the "**fixed side bearing**" and the bearing which allows axial movement relatively is called the "**floating-side bearing**". This allows for expansion and contraction of the shaft due to temperature variation and enables error in bearing mounting clearance to be absorbed.

The **fixed side bearing** is able to support radial and axial loads. A bearing which can fix axial movement in both directions should therefore be selected. A **floating-side bearing** that allows movement in the axial direction while supporting a radial load is desirable. Movement in the axial direction occurs on the raceway surface for bearings with separable inner and outer rings such as cylindrical roller bearings, and occurs on the fitting surface for those which are not separable, such as deep groove ball bearings.

In applications with short distances between bearings, shaft expansion and contraction due to temperature fluctuations is slight, therefore the same type of bearing may be used for both the fixed-side and floating-side bearing. In such cases it is common to use a set of matching bearings, such as angular contact ball bearings, to guide and support the shaft in one axial direction only.

Table 2.2 (1) shows typical bearing arrangements where the bearing type differs on the fixed side and floating side. **Table 2.2 (2)** shows some common bearing arrangements where no distinction is made between the fixed side and floating side. Vertical shaft bearing arrangements are shown in **Table 2.2 (3)**.

Table 2.2 (1) Bearing arrangement (distinction between fixed and floating-side)

Arrangement		Comment	Application (Reference)
Fixed	Floating		
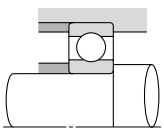	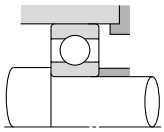	1. General arrangement for small machinery. 2. For radial loads, but will also accept axial loads.	Small pumps, auto-mobile transmissions, etc.
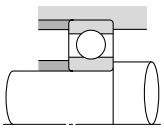	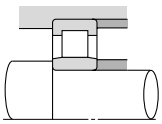	1. Suitable when mounting error and shaft deflection are minimal or used for high rotational speed application. 2. Even with expansion and contraction of shaft, floating side moves smoothly.	Medium-sized electric motors, ventilators, etc.
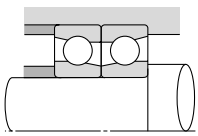	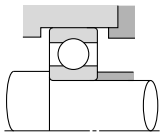	1. Radial loading and dual direction of axial loading possible. 2. In place of duplex angular contact ball bearings, double-row angular contact ball bearings are also used.	Worm reduction gear
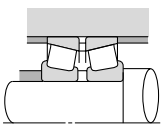	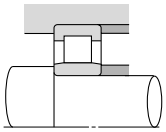	1. Heavy loading capable. 2. Shafting rigidity increased by preloading the two back-to-back fixed bearings. 3. Requires high precision shafts and housings, and minimal fitting errors.	Reduction gears for general industrial machinery
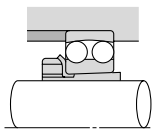	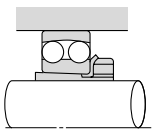	1. Allows for shaft deflection and fitting errors. 2. By using an adaptor on long shafts without screws or shoulders, bearing mounting and dismounting can be facilitated. 3. Self-aligning ball bearings are used for positioning in the axial direction, and not suitable for applications requiring support of axial load.	General industrial machinery
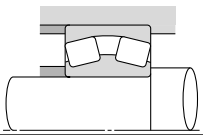	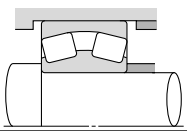	1. Widely used in general industrial machinery with heavy and shock load demands. 2. Allows for shaft deflection and fitting errors. 3. Accepts radial loads as well as dual direction of axial loads.	Reduction gears for general industrial machinery
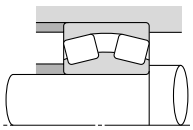	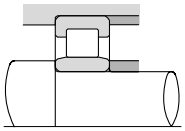	1. Accepts radial loads as well as dual direction axial loads. 2. Suitable when both inner and outer ring require tight fit.	Reduction gears for general industrial machinery
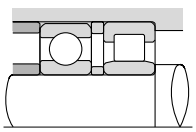	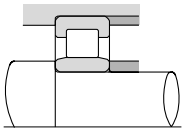	1. Capable of handling large radial and axial loads at high rotational speeds. 2. Maintains clearance between the bearing's outer diameter and housing inner diameter to prevent deep groove ball bearings from receiving radial loads.	Transmissions for diesel locomotives

Table 2.2 (2) Bearing arrangement (no distinction between fixed and floating-side)

Arrangement	Comment	Application (Reference)
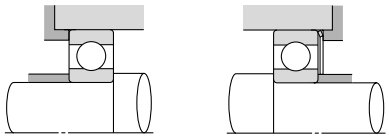	1. General arrangement for use in small machines. 2. Preload is sometimes applied by placing a spring on the outer ring side surface or inserting a shim. (can be floating-side bearings.)	Small electric motors, small reduction gears, etc.
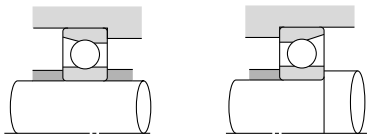	1. Back to back arrangement is preferable to face to face arrangement when moment load applied. 2. Able to support axial and radial loads; suitable for high-speed rotation. 3. Rigidity of shaft can be enhanced by providing preload.	Machine tool spindles, etc.
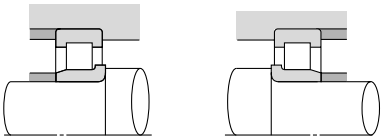	1. Capable of supporting extra heavy loads and impact loads. 2. Suitable if inner and outer ring tight fit is required. 3. Care must be taken that axial clearance does not become too small during operation.	Construction equipment, mining equipment sheaves, agitators, etc.
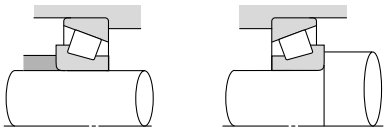 Back to back 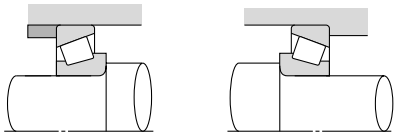 Face to face	1. Withstands heavy and shock loads. Wide range application. 2. Shaft rigidity can be enhanced by providing preload, but make sure preload is not excessive. 3. Back-to-back arrangement for moment loads, and face-to-face arrangement to alleviate fitting errors. 4. With face-to-face arrangement, inner ring tight fit is facilitated.	Reduction gears, front and rear axle of automobiles, etc.

Table 2.2 (3) Bearing arrangement (Vertical shaft)

Arrangement	Comment	Application (Reference)
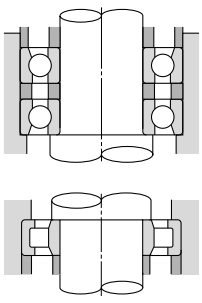	1. When fixing bearing is a duplex angular contact ball bearing, floating bearing should be a cylindrical roller bearing.	Vertically mounted electric motors, etc.
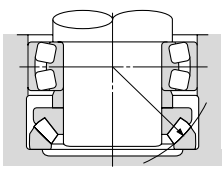	1. Most suitable arrangement for very heavy axial loads. 2. Shaft deflection and mounting error can be absorbed by matching the center of the spherical surface with the center of spherical roller thrust bearings.	Crane center shafts, etc.

3. Load Rating and Life

3.1 Bearing life

Even in bearings operating under normal conditions, the surfaces of the raceway and rolling elements are constantly being subjected to repeated compressive stresses which causes flaking of these surfaces to occur. This flaking is due to material fatigue and will eventually cause the bearings to fail. The effective life of a bearing is usually defined in terms of the total number of revolutions a bearing can undergo before flaking of either the raceway surface or the rolling element surfaces occurs.

Other causes of bearing failure are often attributed to problems such as seizing, abrasions, cracking, chipping, scuffing, rust, etc. However, these so called "causes" of bearing failure are usually themselves caused by improper installation, insufficient or improper lubrication, faulty sealing or inaccurate bearing selection. Since the above mentioned "causes" of bearing failure can be avoided by taking the proper precautions, and are not simply caused by material fatigue, they are considered separately from the flaking aspect.

3.2 Basic rating life and basic dynamic load rating

A group of seemingly identical bearings when subjected to identical load and operating conditions will exhibit a wide diversity in their durability.

This "life" disparity can be accounted for by the difference in the fatigue of the bearing material itself. This disparity is considered statistically when calculating bearing life, and the basic rating life is defined as follows.

The basic rating life is based on a 90% statistical model which is expressed as the total number of revolutions 90% of the bearings in an identical group of bearings subjected to identical operating conditions will attain or surpass before flaking due to material fatigue occurs. For bearings operating at fixed constant speeds, the basic rating life (90% reliability) is expressed in the total number of hours of operation.

Basic dynamic load rating expresses a rolling bearing's capacity to support a dynamic load. The basic dynamic load rating is the load under which the basic rating life of the bearing is 1 million revolutions. This is expressed as pure radial load for radial bearings and pure axial load for thrust bearings. These are referred to as "basic dynamic load rating (C_r)" and "basic dynamic axial load rating (C_a)." The basic dynamic load ratings given in the bearing tables of this catalog are for bearings constructed of NTN standard bearing materials, using standard manufacturing techniques.

The relationship between the basic rating life, the basic dynamic load rating and the bearing load is given in formula.

For ball bearings: $$L_{10} = \left(\frac{C}{P}\right)^3 \quad \cdots\cdots\cdots\cdots (3.1)$$

For roller bearings: $$L_{10} = \left(\frac{C}{P}\right)^{10/3} \quad \cdots\cdots\cdots\cdots (3.2)$$

where,

L_{10} : Basic rating life 10^6 revolutions
C : Basic dynamic load rating, N {kgf}
(C_r: radial bearings, C_a: thrust bearings)
P : Equivalent dynamic load, N {kgf}
(P_r: radial bearings, P_a: thrust bearings)
n : Rotational speed, min^{-1}

The relationship between Rotational speed n and speed factor f_n as well as the relation between the basic rating life L_{10h} and the life factor f_n is shown in **Table 3.1** and **Fig. 3.1.**

Table 3.1 Correlation of bearing basic rating life, life factor, and speed factor

Classification	Ball bearing	Roller bearing
Basic rating life L_{10h} h	$\frac{10^6}{60n}\left(\frac{C}{P}\right)^3 = 500\, f_h^3$	$\frac{10^6}{60n}\left(\frac{C}{P}\right)^{10/3} = 500\, f_h^{10/3}$
Life factor f_h	$f_n \frac{C}{P}$	$f_n \frac{C}{P}$
Speed factor f_n	$\left(\frac{33.3}{n}\right)^{1/3}$	$\left(\frac{33.3}{n}\right)^{3/10}$

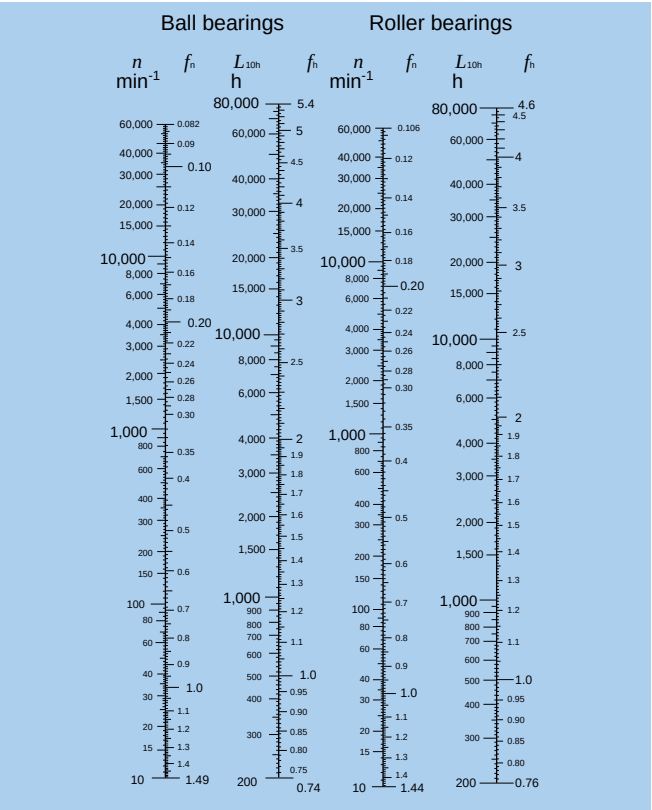

Fig. 3.1 Bearing life rating scale

When several bearings are incorporated in machines or equipment as complete units, all the bearings in the unit are considered as a whole when computing bearing life (see formula 3.3).

$$L = \frac{1}{\left(\frac{1}{L_1^e} + \frac{1}{L_2^e} + \cdots \frac{1}{L_n^e}\right)^{1/e}} \cdots\cdots\cdots\cdots (3.3)$$

where,

L : Total basic rating life of entire unit, h

L_1 , L_2 $\cdots L_n$: Basic rating life of individual bearings, 1, 2, $\cdots$n, h

e = 10/9.....For ball bearings

e = 9/8.....For roller bearings

When the load conditions vary at regular intervals, the life can be given by formula (3.4).

$$L_m = \left(\frac{\Phi_1}{L_1} + \frac{\Phi_2}{L_2} + \cdots \frac{\Phi_j}{L_j}\right)^{-1} \cdots\cdots\cdots\cdots (3.4)$$

where,

L_m : Total life of bearing

Φ_j : Frequency of individual load conditions ($\Sigma \Phi_j = 1$)

L_j : Life under individual conditions

If equivalent load P and rotational speed n are operating conditions of the bearing, basic rated dynamic load C that satisfies required life of the bearing is determined using **Table 3.1** and formula (3.5). Bearings that satisfy the required C can be selected from the bearing dimensions table provided in the catalog.

$$C = P \frac{f_h}{f_n} \cdots\cdots\cdots\cdots (3.5)$$

3.3 Adjusted rating life

The basic bearing rating life (90% reliability factor) can be calculated through the formulas mentioned earlier in Section 3.2. However, in some applications a bearing life factor of over 90% reliability may be required. To meet these requirements, bearing life can be lengthened by the use of specially improved bearing materials or manufacturing process. Bearing life is also sometimes affected by operating conditions such as lubrication, temperature and rotational speed.

Basic rating life adjusted to compensate for this is called "adjusted rating life," and is determined using formula (3.6).

$$L_{na} = a_1 \cdot a_2 \cdot a_3 \cdot L_{10} \cdots (3.6)$$

where,

L_{na} : Adjusted rating life in millions of revolutions (10^6)

a_1 : Reliability factor

a_2 : Bearing characteristics factor

a_3 : Operating conditions factor

3.3.1 Reliability factor a_1

The value of reliability factor a_1 is provided in **Table 3.2** for reliability of 90% or greater.

3.3.2 Bearing characteristics factor a_2

Bearing characteristics concerning life vary according to bearing material, quality of material and if using special manufacturing process. In this case, life is adjusted using bearing characteristics factor a_2.

The basic dynamic load ratings listed in the catalog are based on NTN's standard material and process, therefore, the adjustment factor $a_2 = 1$. $a_2 > 1$ may be used for specially enhanced materials and manufacturing methods.If this applies, consult with NTN Engineering.

Dimensions change significantly if bearings made of high carbon chrome bearing steel with conventional heat treatment are used at temperatures in excess of 120˚C for an extended period of time. NTN Engineering therefore offers a bearing for high-temperature applications specially treated to stabilize dimensions at the maximum operating temperature (TS treatment). The treatment however makes the bearing softer and affects life of the bearing. Life is adjusted by multiplying by the values given in **Table 3.3**.

Table 3.2 Reliability factor a_1

Reliability %	L_n	Reliability factor a_1
90	L_{10}	1.00
95	L_5	0.62
96	L_4	0.53
97	L_3	0.44
98	L_2	0.33
99	L_1	0.21

Table 3.3 Treatment for stabilizing dimensions

Symbol	Max. operating temperature (C°)	Bearing characteristics factor a_2
TS2	160	1.00
TS3	200	0.73
TS4	250	0.48

3.3.3 Operating conditions factor a_3

Operating conditions factor a_3 is used to compensate for when lubrication condition worsens due to rise in temperature or rotational speed, lubricant deteriorates, or becomes contaminated with foreign matter.

Generally speaking, when lubricating conditions are satisfactory, the a_3 factor has a value of one; and when lubricating conditions are exceptionally favorable, and all other operating conditions are normal, a_3 can have a value greater than one. a_3 is however less than 1 in the following cases:

- Dynamic viscosity of lubricating oil is too low for bearing operating temperature
  (13 mm^2/s or less for ball bearings, 20 mm^2/s for roller bearings)
- Rotational speed is particularly low
  (If sum of rotational speed n min^{-1} and rolling element pitch diameter D_{pw} mm is $D_{pw} \cdot n < 10{,}000$)
- Bearing operating temperature is too high
  If bearing operating temperature is too high, the raceway becomes softened, thereby shortening life. Life is adjusted by multiplying by the values given in **Fig. 3.2** as the operating condition factor according to operating temperature. This however does not apply to bearings that have been treated to stabilize dimensions.
- Lubricant contaminated with foreign matter or moisture
  If using special operating condition, consult with NTN Engineering. Even if $a_2 > 1$ is used for specially bearings made of enhanced materials or produced by special manufacturing methods, $a_2 \times a_3 < 1$ is used if lubricating conditions are not favorable.

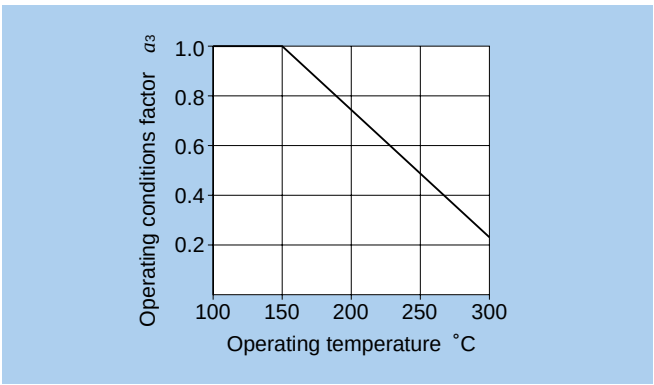

Fig. 3.2 Operating conditions factor according to operating temperature

When a super heavy load is applied, harmful plastic distortion could be produced on the contact surfaces of the rolling elements and raceway. The formulae for determining basic rating life (3.1, 3.2, and 3.6) do not apply if P_r exceeds either C_{or} (Basic static load rating) or 0.5 C_r for radial bearings, or if P_a exceeds 0.5 C_a for thrust bearings.

3.4 Machine applications and requisite life

When selecting a bearing, it is essential that the requisite life of the bearing be established in relation to the operating conditions. The requisite life of the bearing is usually determined by the type of machine in which the bearing will be used, and duration of service and operational reliability requirements. A general guide to these requisite life criteria is shown in **Table 3.4**. When determining bearing size, the fatigue life of the bearing is an important factor; however, besides bearing life, the strength and rigidity of the shaft and housing must also be taken into consideration.

3.5 Basic static load rating

When stationary rolling bearings are subjected to static loads, they suffer from partial permanent deformation of the contact surfaces at the contact point between the rolling elements and the raceway. The amount of deformity increases as the load increases, and if this increase in load exceeds certain limits, the subsequent smooth operation of the bearings is impaired.

It has been found through experience that a permanent deformity of 0.0001 times the diameter of the rolling element, occurring at the most heavily stressed contact point between the raceway and the rolling elements, can be tolerated without any impairment in running efficiency.

Table 3.4 Machine application and requisite life (reference)

Service classification	Machine application and requisite life (reference) L_{10h} $\times 10^3$ h				
	～4	4～12	12～30	30～60	60～
Machines used for short periods or used only occasionally	● Household appliances ● Electric hand tools	● Farm machinery ● Office equipment			
Short period or intermittent use, but with high reliability requirements	● Medical appliances ● Measuring instruments	● Home air-conditioning motor ● Construction equipment ● Elevators ● Cranes	● Crane (sheaves)		
Machines not in constant use, but used for long periods	● Automobiles ● Two-wheeled vehicles	● Small motors ● Buses/trucks ● General gear drives ● Woodworking machines	● Machine spindles ● Industrial motors ● Crushers ● Vibrating screens	● Main gear drives ● Rubber/plastic ● Calender rolls ● Printing machines	
Machines in constant use over 8 hours a day		● Rolling mills ● Escalators ● Conveyors ● Centrifuges	● Railway vehicle axles ● Air conditioners ● Large motors ● Compressor pumps	● Locomotive axles ● Traction motors ● Mine hoists ● Pressed flywheels	● Papermaking machines ● Propulsion equipment for marine vessels
24 hour continuous operation, non-interruptable					● Water supply equipment ● Mine drain pumps/ventilators ● Power generating equipment

The basic static load rating refers to a fixed static load limit at which a specified amount of permanent deformation occurs. It applies to pure radial loads for radial bearings and to pure axial loads for thrust bearings. The maximum applied load values for contact stress occurring at the rolling element and raceway contact points are given below.

For ball bearings	4,200 MPa {428kgf/mm^2}
For self-aligning ball bearings	4,600 MPa {469kgf/mm^2}
For roller bearings	4,000 MPa {408kgf/mm^2}

Referred to as "basic static radial load rating" for radial bearings and "basic static axial load rating" for thrust bearings, basic static load rating is expressed as C_{or} or C_{oa} respectively and is provided in the bearing dimensions table.

3.6 Allowable static equivalent load

Generally the static equivalent load which can be permitted (See page A-25) is limited by the basic static rating load as stated in **Section 3.5**. However, depending on requirements regarding friction and smooth operation, these limits may be greater or lesser than the basic static rating load.

This is generally determined by taking the safety factor So given in **Table 3.5** and formula (3.7) into account.

$$S_o = C_o / P_o \cdots (3.7)$$

where,

S_o : Safety factor
C_o : Basic static load rating, N {kgf}
(radial bearings: C_{or}, thrust bearings: C_{oa})
P_o : Static equivalent load, N {kgf}
(radial: P_{or}, thrust: C_{oa})

Table 3.5 Minimum safety factor values S_0

Operating conditions	Ball bearings	Roller bearings
High rotational accuracy demand	2	3
Normal rotating accuracy demand (Universal application)	1	1.5
Slight rotational accuracy deterioration permitted (Low speed, heavy loading, etc.)	0.5	1

Note 1: For spherical thrust roller bearings, min. S_0 value=4.
2: For shell needle roller bearings, min. S_0 value=3.
3: When vibration and/or shock loads are present, a load factor based on the shock load needs to be included in the P_0 max value.
4: If a large axial load is applied to deep groove ball bearings or angular ball bearings, the contact oval may exceed the raceway surface. For more information, please contact NTN Engineering.

4. Bearing Load Calculation

To compute bearing loads, the forces which act on the shaft being supported by the bearing must be determined. Loads which act on the shaft and its related parts include dead load of the rotator, load produced when the machine performs work, and load produced by transmission of dynamic force. These can theoretically be mathematically calculated, but calculation is difficult in many cases.

A method of calculating loads that act upon shafts that convey dynamic force, which is the primary application of bearings, is provided herein.

4.1 Load acting on shafts

4.1.1 Load factor

There are many instances where the actual operational shaft load is much greater than the theoretically calculated load, due to machine vibration and/or shock. This actual shaft load can be found by using formula (4.1).

$$K = f_w \cdot K_c \quad \cdots\cdots (4.1)$$

where,

K : Actual shaft load N {kgf}
f_w : Load factor (**Table 4.1**)
K_c : Theoretically calculated value N {kgf}

Table 4.1 Load factor f_w

Amount of shock	f_w	Application
Very little or no shock	1.0～1.2	Electric machines, machine tools, measuring instruments.
Light shock	1.2～1.5	Railway vehicles, automobiles, rolling mills, metal working machines, paper making machines, printing machines, aircraft, textile machines, electrical units, office machines.
Heavy shock	1.5～3.0	Crushers, agricultural equipment, construction equipment, cranes.

4.1.2 Gear load

The loads operating on gears can be divided into three main types according to the direction in which the load is applied; i.e. tangential (K_t), radial (K_s), and axial (K_a). The magnitude and direction of these loads differ according to the types of gears involved. The load calculation methods given herein are for two general-use gear and shaft arrangements: parallel shaft gears, and cross shaft gears.

(1)Loads acting on parallel shaft gears

The forces acting on spur gears and helical gears are depicted in **Figs. 4.1**, **4.2**, and **4.3**. The load magnitude can be found by using or formulas (4.2), through (4.5).

$$\left.\begin{aligned} K_t &= \frac{19.1\times10^6 \cdot H}{D_p \cdot n} \quad \text{N} \\ &= \frac{1.95\times10^6 \cdot H}{D_p \cdot n} \quad \{\text{kgf}\} \end{aligned}\right\} \quad \cdots\cdots (4.2)$$

$$K_s = K_t \cdot \tan\alpha \quad \text{(Spur gear)} \quad \cdots\cdots (4.3a)$$

$$= K_t \cdot \frac{\tan\alpha}{\cos\beta} \quad \text{(Helical gear)} \quad \cdots\cdots (4.3b)$$

$$K_r = \sqrt{K_t^2 + K_s^2} \quad \cdots\cdots (4.4)$$

$$K_a = K_t \cdot \tan\beta \quad \text{(Helical gear)} \quad \cdots\cdots (4.5)$$

where,

K_t : Tangential gear load (tangential force), N {kgf}
K_s : Radial gear load (separating force), N {kgf}
K_r : Right angle shaft load (resultant force of tangential force and separating force), N {kgf}
K_a : Parallel load on shaft, N {kgf}
H : Transmission force , kW
n : Rotational speed, min^{-1}
D_p : Gear pitch circle diameter, mm
α : Gear pressure angle, deg
β : Gear helix angle, deg

Because the actual gear load also contains vibrations and shock loads as well, the theoretical load obtained by the above formula should also be adjusted by the gear factor f_z as shown in **Table 4.2.**

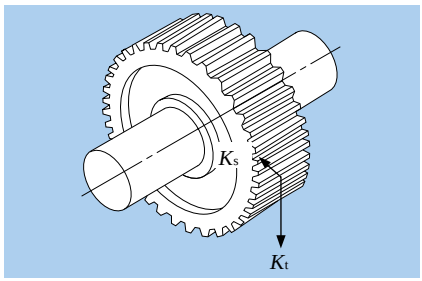

Fig. 4.1 Spur gear loads

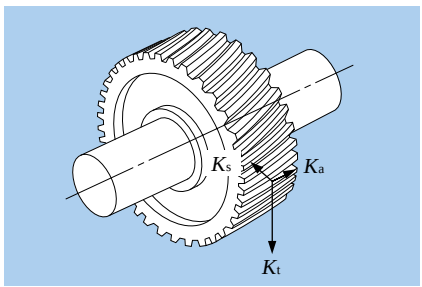

Fig. 4.2 Helical gear loads

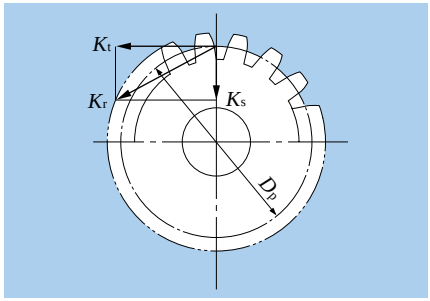

Fig. 4.3 Radial resultant forces

Table 4.2 Gear factor f_z

Gear type	f_z
Precision ground gears (Pitch and tooth profile errors of less than 0.02 mm)	1.05～1.1
Ordinary machined gears (Pitch and tooth profile errors of less than 0.1 mm)	1.1～1.3

(2)Loads acting on cross shafts

Gear loads acting on straight tooth bevel gears and spiral bevel gears on cross shafts are shown in **Figs. 4.4** and **4.5**. The calculation methods for these gear loads are shown in **Table 4.3**. Herein, to calculate gear loads for straight bevel gears, the helix angle $\beta = 0$.

The symbols and units used in **Table 4.3** are as follows:

K_t : Tangential gear load (tangential force), N {kgf}
K_s : Radial gear load (separating force), N {kgf}
K_a : Parallel shaft load (axial load), N {kgf}
H : Transmission force, kW
n : Rotational speed, min^{-1}
D_{pm} : Mean pitch circle diameter, mm
α : Gear pressure angle, deg
β : Helix angle, deg
δ : Pitch cone angle, deg

Because the two shafts intersect, the relationship of pinion and gear load is as follows:

$$K_{sp} = K_{ag} \cdots\cdots (4.6)$$
$$K_{ap} = K_{sg} \cdots\cdots (4.7)$$

where,

K_{sp}, K_{sg} : Pinion and gear separating force, N {kgf}
K_{ap}, K_{ag} : Pinion and gear axial load, N {kgf}

For spiral bevel gears, the direction of the load varies depending on the direction of the helix angle, the direction of rotation, and which side is the driving side or the driven side. The directions for the separating force (K_s) and axial load (K_a) shown in **Fig. 4.5** are positive directions. The direction of rotation and the helix angle direction are defined as viewed from the large end of the gear. The gear rotation direction in **Fig. 4.5** is assumed to be clockwise (right).

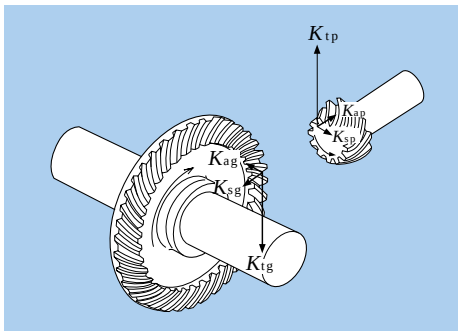

Fig. 4.4 Loads on bevel gears

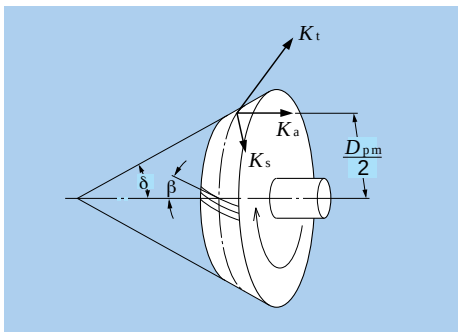

Fig. 4.5 Bevel gear diagram

Table 4.3 Loads acting on bevel gears

Types of load	Rotation direction / Helix direction	Clockwise / Right	Counter clockwise / Left	Clockwise / Left	Counter clockwise / Right
Tangential load (tangential force) K_t		$K_t = \frac{19.1\times10^6 \cdot H}{D_{pm} \cdot n}$, $\left\{\frac{1.95\times10^6 \cdot H}{D_{pm} \cdot n}\right\}$			
Radial load (separation force) K_s	Driving side	$K_s = K_t\left(\tan\alpha\frac{\cos\delta}{\cos\beta} + \tan\beta\sin\delta\right)$		$K_s = K_t\left(\tan\alpha\frac{\cos\delta}{\cos\beta} - \tan\beta\sin\delta\right)$	
	Driven side	$K_s = K_t\left(\tan\alpha\frac{\cos\delta}{\cos\beta} - \tan\beta\sin\delta\right)$		$K_s = K_t\left(\tan\alpha\frac{\cos\delta}{\cos\beta} + \tan\beta\sin\delta\right)$	
Parallel load on gear shaft (axial load) K_a	Driving side	$K_a = K_t\left(\tan\alpha\frac{\sin\delta}{\cos\beta} - \tan\beta\cos\delta\right)$		$K_a = K_t\left(\tan\alpha\frac{\sin\delta}{\cos\beta} + \tan\beta\cos\delta\right)$	
	Driven side	$K_a = K_t\left(\tan\alpha\frac{\sin\delta}{\cos\beta} + \tan\beta\cos\delta\right)$		$K_a = K_t\left(\tan\alpha\frac{\sin\delta}{\cos\beta} - \tan\beta\cos\delta\right)$	

4.1.3 Chain / belt shaft load

The tangential loads on sprockets or pulleys when power (load) is transmitted by means of chains or belts can be calculated by formula (4.8).

$$K_t = \frac{19.1 \times 10^6 \cdot H}{D_p \cdot n} \quad \text{N}$$

$$= \frac{1.95 \times 10^6 \cdot H}{D_p \cdot n} \quad \{\text{kgf}\} \qquad \cdots\cdots\cdots\cdots\cdots (4.8)$$

where,

K_t : Sprocket/pulley tangential load, N {kgf}

H : Transmitted force, kW

D_p : Sprocket/pulley pitch diameter, mm

For belt drives, an initial tension is applied to give sufficient constant operating tension on the belt and pulley. Taking this tension into account, the radial loads acting on the pulley are expressed by formula (4.9). For chain drives, the same formula can also be used if vibrations and shock loads are taken into consideration.

$$K_r = f_b \cdot K_t \cdots (4.9)$$

where,

K_r : Sprocket or pulley radial load, N {kgf}

f_b : Chain or belt factor (**Table 4.4**)

Table. 4.4 chain or belt factor f_b

Chain or belt type	f_b
Chain (single)	1.2～1.5
V-belt	1.5～2.0
Timing belt	1.1～1.3
Flat belt (w / tension pulley)	2.5～3.0
Flat belt	3.0～4.0

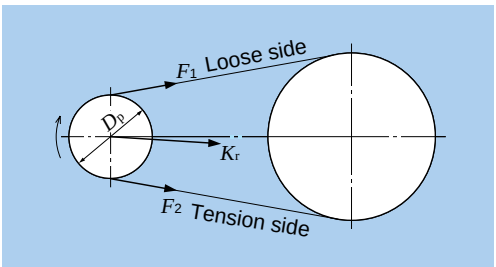

Fig. 4.6 Chain / belt loads

4.2 Bearing load distribution

For shafting, the static tension is considered to be supported by the bearings, and any loads acting on the shafts are distributed to the bearings.

For example, in the gear shaft assembly depicted in **Fig. 4.7**, the applied bearing loads can be found by using formulas (4.10) and (4.11).

This example is a simple case, but in reality, many of the calculations are quite complicated.

$$F_{rA} = \frac{a+b}{b} F_{\mathrm{I}} + \frac{d}{c+d} F_{\mathrm{II}} \qquad \cdots\cdots\cdots\cdots\cdots (4.10)$$

$$F_{rB} = -\frac{a}{b} F_{\mathrm{I}} + \frac{c}{c+d} F_{\mathrm{II}} \qquad \cdots\cdots\cdots\cdots\cdots (4.11)$$

where,

F_{rA} : Radial load on bearing A, N {kgf}

F_{rB} : Radial load on bearing B, N {kgf}

F_{I}, F_{II} : Radial load on shaft, N {kgf}

If directions of radial load differ, the vector sum of each respective load must be determined.

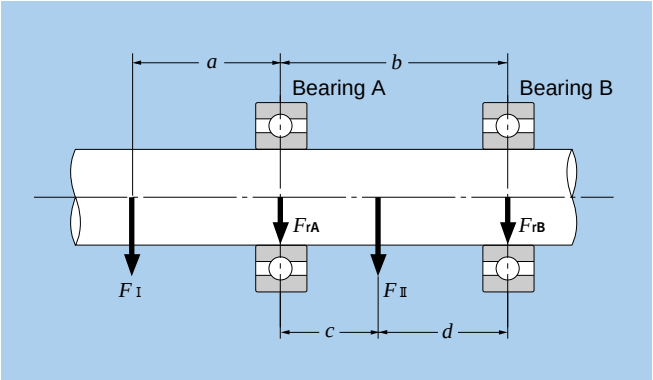

Fig. 4.7

4.3 Mean load

The load on bearings used in machines under normal circumstances will, in many cases, fluctuate according to a fixed time period or planned operation schedule. The load on bearings operating under such conditions can be converted to a mean load (F_m), this is a load which gives bearings the same life they would have under constant operating conditions.

(1) Fluctuating stepped load

The mean bearing load, F_m, for stepped loads is calculated from formula (4.12). F_1 , F_2 ..... F_n are the loads acting on the bearing; n_1, n_2.....n_n and t_1, t_2..... t_n are the bearing speeds and operating times respectively.

$$F_m = \left\{ \frac{\Sigma (F_i^{\,p} n_i t_i)}{\Sigma (n_i t_i)} \right\}^{1/p} \cdots\cdots\cdots\cdots\cdots\cdots (4.12)$$

where:

$p = 3$ For ball bearings
$p = 10/3$ For roller bearings

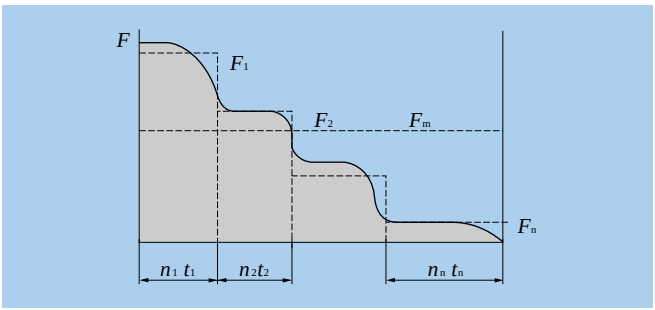

Fig. 4.8 Stepped load

(2) Continuously fluctuating load

Where it is possible to express the function $F(t)$ in terms of load cycle t_o and time t, the mean load is found by using formula (4.13).

$$F_m = \left\{ \frac{1}{t_o} \int_o^{t_o} F(t)^p \, dt \right\}^{1/p} \cdots\cdots\cdots\cdots\cdots\cdots (4.13)$$

where:

$p = 3$ For ball bearings
$p = 10/3$ For roller bearings

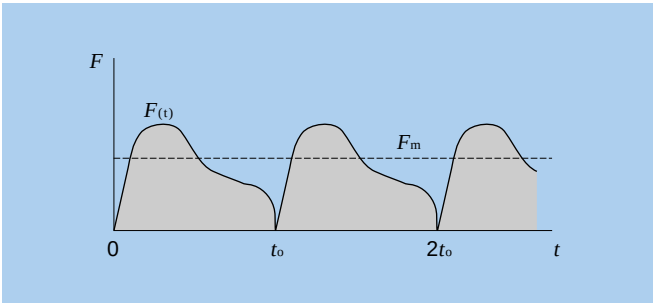

Fig. 4.9 Load that fluctuated as function of time

(3) Linear fluctuating load

The mean load, F_m, can be approximated by formula (4.14).

$$F_m = \frac{F_{min} + 2F_{max}}{3} \cdots (4.14)$$

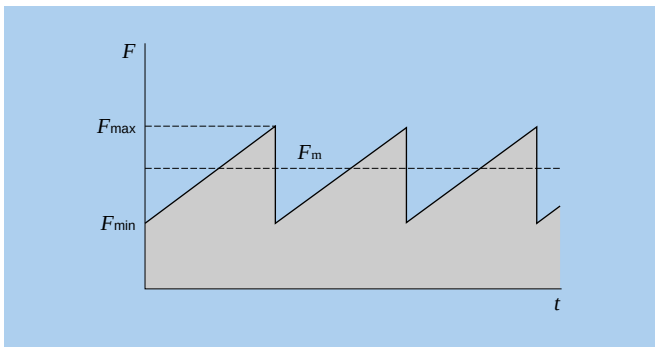

Fig. 4.10 Linear fluctuating load

(4) Sinusoidal fluctuating load

The mean load, F_m, can be approximated by formulas (4.15) and (4.16).

case (a) $F_m = 0.75 F_{max}$ ····· (4.15)
case (b) $F_m = 0.65 F_{max}$ ····· (4.16)

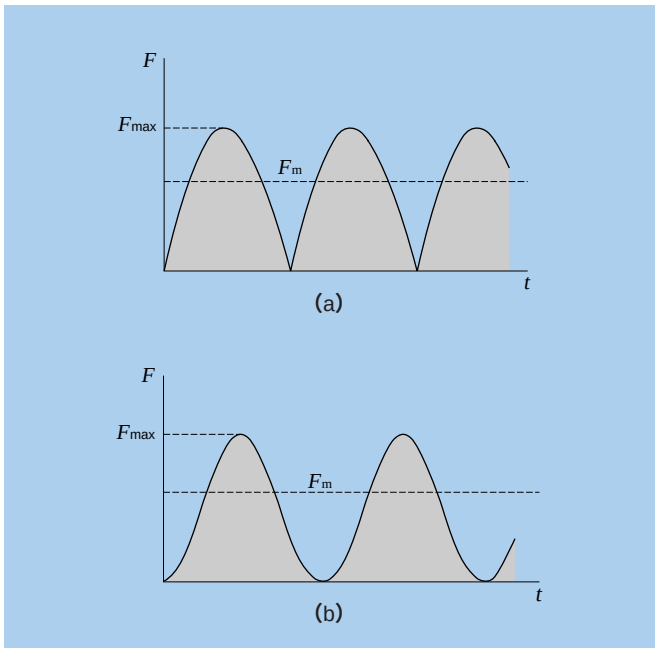

Fig. 4.11 Sinusoidal variable load

4.4 Equivalent load

4.4.1 Dynamic equivalent load

When both dynamic radial loads and dynamic axial loads act on a bearing at the same time, the hypothetical load acting on the center of the bearing which gives the bearings the same life as if they had only a radial load or only an axial load is called the dynamic equivalent load.

For radial bearings, this load is expressed as pure radial load and is called the dynamic equivalent radial load. For thrust bearings, it is expressed as pure axial load, and is called the dynamic equivalent axial load.

(1) Dynamic equivalent radial load

The dynamic equivalent radial load is expressed by formula (4.17).

$$P_r = XF_r + YF_a \cdots\cdots\cdots\cdots\cdots (4.17)$$

where,

P_r : Dynamic equivalent radial load, N {kgf}
F_r : Actual radial load, N {kgf}
F_a : Actual axial load, N {kgf}
X : Radial load factor
Y : Axial load factor

The values for X and Y are listed in the bearing tables.

(2) Dynamic equivalent axial load

As a rule, standard thrust bearings with a contact angle of 90° cannot carry radial loads. However, self-aligning thrust roller bearings can accept some radial load. The dynamic equivalent axial load for these bearings is given in formula (4.18).

$$P_a = F_a + 1.2F_r \cdots\cdots\cdots\cdots\cdots (4.18)$$

where,

P_a : Dynamic equivalent axial load, N {kgf}
F_a : Actual axial load, N {kgf}
F_r : Actual radial load, N {kgf}

Provided that $F_r / F_a \leqq 0.55$ only.

4.4.2 Static equivalent load

The static equivalent load is a hypothetical load which would cause the same total permanent deformation at the most heavily stressed contact point between the rolling elements and the raceway as under actual load conditions; that is when both static radial loads and static axial loads are simultaneously applied to the bearing.

For radial bearings this hypothetical load refers to pure radial loads, and for thrust bearings it refers to pure centric axial loads. These loads are designated static equivalent radial loads and static equivalent axial loads respectively.

(1) Static equivalent radial load

For radial bearings the static equivalent radial load can be found by using formula (4.19) or (4.20). The greater of the two resultant values is always taken for P_{or}.

$$P_{or} = X_o F_r + Y_o F_a \cdots (4.19)$$
$$P_{or} = F_r \cdots\cdots\cdots\cdots (4.20)$$

where,

P_{or} : Static equivalent radial load, N {kgf}
F_r : Actual radial load, N {kgf}
F_a : Actual axial load, N {kgf}
X_o : Static radial load factor
Y_o : Static axial load factor

The values for X_o and Y_o are given in the respective bearing tables.

(2) Static equivalent axial load

For spherical thrust roller bearings the static equivalent axial load is expressed by formula (4.21).

$$P_{oa} = F_a + 2.7F_r \cdots (4.21)$$

where,

P_{oa} : Static equivalent axial load, N {kgf}
F_a : Actual axial load, N {kgf}
F_r : Actual radial load, N {kgf}

Provided that $F_r / F_a \leqq 0.55$ only.

4.4.3 Load calculation for angular contact ball bearings and tapered roller bearings

For angular contact ball bearings and tapered roller bearings the pressure cone apex (load center) is located as shown in **Fig. 4.12**, and their values are listed in the bearing tables.

When radial loads act on these types of bearings the component force is induced in the axial direction. For this reason, these bearings are used in pairs. For load calculation this component force must be taken into consideration and is expressed by formula (4.22).

$$F_a = \frac{0.5F_r}{Y} \cdots\cdots\cdots\cdots (4.22)$$

where,

F_a: Axial component force, N {kgf}
F_r: Radial load, N {kgf}
Y: Axial load factor

The dynamic equivalent radial loads for these bearing pairs are given in **Table 4.5**.

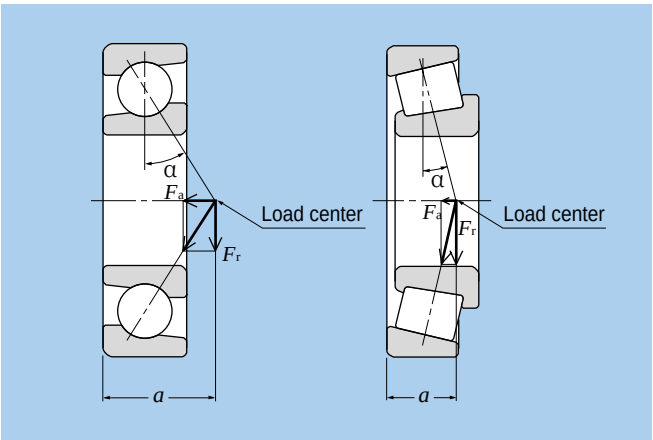

Fig. 4.12 Pressure cone apex and axial component force

Table 4.5 Bearing arrangement and dynamic equivalent load

Bearing arrangement	Load condition	Axial load	Dynamic equivalent radial load
Rear 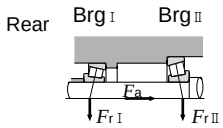	$\frac{0.5F_{r\,I}}{Y_I} \leqq \frac{0.5F_{r\,II}}{Y_{II}} + F_a$	$F_{a\,I} = \frac{0.5F_{r\,II}}{Y_{II}} + F_a$	$P_{r\,I} = XF_{r\,I} + Y_I \left(\frac{0.5F_{r\,II}}{Y_{II}} + F_a \right)$
		———	$P_{r\,II} = F_{r\,II}$
Front 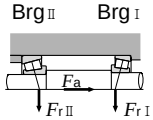	$\frac{0.5F_{r\,I}}{Y_I} > \frac{0.5F_{r\,II}}{Y_{II}} + F_a$	———	$P_{r\,I} = F_{r\,I}$
		$F_{a\,II} = \frac{0.5F_{r\,I}}{Y_I} - F_a$	$P_{r\,II} = XF_{r\,II} + Y_{II} \left(\frac{0.5F_{r\,I}}{Y_I} - F_a \right)$
Rear 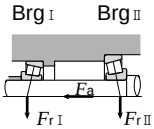	$\frac{0.5F_{r\,II}}{Y_{II}} \leqq \frac{0.5F_{r\,I}}{Y_I} + F_a$	———	$P_{r\,I} = F_{r\,I}$
		$F_{a\,II} = \frac{0.5F_{r\,I}}{Y_I} + F_a$	$P_{r\,II} = XF_{r\,II} + Y_{II} \left(\frac{0.5F_{r\,I}}{Y_I} + F_a \right)$
Front 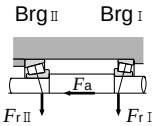	$\frac{0.5F_{r\,II}}{Y_{II}} > \frac{0.5F_{r\,I}}{Y_I} + F_a$	$F_{a\,I} = \frac{0.5F_{r\,II}}{Y_{II}} - F_a$	$P_{r\,I} = XF_{r\,I} + Y_I \left(\frac{0.5F_{r\,II}}{Y_{II}} - F_a \right)$
		———	$P_{r\,II} = F_{r\,II}$

Note 1: Applies when preload is zero.
2: Radial forces in the opposite direction to the arrow in the above illustration are also regarded as positive.

4.5 Bearing rating life and load calculation examples

In the examples given in this section, for the purpose of calculation, all hypothetical load factors as well as all calculated load factors may be presumed to be included in the resultant load values.

(Example 1)
What is the rating life in hours of operation (L_{10h}) for deep groove ball bearing **6208** operating at rotational speed n = 650 min^{-1}, with a radial load F_r of 3.2 kN {326 kgf} ?

From formula (4.17) the dynamic equivalent radial load:

$$P_r = F_r = 3.2\text{kN} \quad \{326\text{kgf}\}$$

Basic dynamic load rating C_r for bearing 6208 given on page B-12 is 29.1 kN {2970 kgf}, ball bearing speed factor fn relative to rotational speed n = 650 min^{-1} from **Fig. 3.1** is f_n = 0.37. Thus life factor f_h from formula (3.5) is:

$$f_h = f_n \frac{C_r}{P_r} = 0.37 \times \frac{29.1}{3.2} = 3.36$$

Therefore, with f_h = 3.36 from **Fig. 3.1** the rated life, L_{10h}, is approximately 19,000 hours.

(Example 2)
What is the life rating L_{10h} for the same bearing and conditions as in **Example 1**, but with an additional axial load F_a of 1.8 kN {184 kgf} ?

To find the dynamic equivalent radial load value for P_r, the radial load factor X and axial load factor Y are used. Basic static load rating C_{or} for bearing 6208 given on page B-12 is 17.8 kN {1820 kgf} and f_o is 14.0. Therefore:

$$\frac{f_o \cdot F_a}{C_{or}} = \frac{14 \times 1.8}{17.8} = 1.42$$

Calculating by the proportional interpolation method given on page B-13, e = 0.30.

For the operating radial load and axial load:

$$\frac{F_a}{F_r} = \frac{1.8}{3.2} = 0.56 > e = 0.30$$

From page B-13 X = 0.56 and Y = 1.44, and from formula (4.17) the equivalent radial load, P_r, is:

$$P_r = XF_r + YF_a = 0.56 \times 3.2 + 1.43 \times 1.8$$
$$= 4.38 \quad \text{kN} \quad \{447\text{kgf}\}$$

From Fig. 3.1 and formula (3.1) the life factor, f_h, is:

$$f_h = f_n \frac{C_r}{P_r} = 0.37 \times \frac{29.1}{4.38} = 2.46$$

Therefore, with life factor f_h = 2.46, from **Fig. 3.1** the rated life, L_{10h}, is approximately 7,500 hours.

(Example 3)
Determine the optimum model number for a cylindrical roller bearing operating at the rotational speed n = 450 min^{-1}, with a radial load F_r of 200 kN {20,400kgf}, and which must have a life (L_{10h}) of over 20,000 hours.

From **Fig. 3.1** the life factor f_h = 3.02 (L_{10h} at 20,000), and the speed factor f_n = 0.46 (n = 450 min^{-1}). To find the required basic dynamic load rating, C_r, formula (3.1) is used.

$$C_r = \frac{f_h}{f_n} P_r = \frac{3.02}{0.46} \times 200$$
$$= 1{,}313\text{kN} \quad \{134{,}000\text{kgf}\}$$

From page B-106, the smallest bearing that fulfills all the requirements is **NU2336** (C_r = 1,380 kN {141,000kgf}).

(Example 4)
The spur gear shown in **Fig. 4.13** (pitch diameter D_p = 150 mm, pressure angle α = 20°) is supported by a pair of tapered roller bearings, 4T-32206 (C_r = 54.5 kN {5,600 kgf}) and 4T-32205 (C_r = 42 kN {4300 kfg}). Find rating life for each bearing when gear transfer power H = 150 kW and rotational speed n = 2,000 min^{-1}.

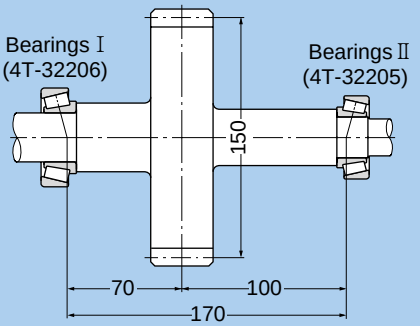

Fig. 4.13 Spur gear diagram

The gear load from formulas (4.2), (4.3a) and (4.4) is:

$$K_t = \frac{19.1\times10^6 \cdot H}{D_p \cdot n} = \frac{19{,}100\times150}{150\times2{,}000}$$
$$= 9.55\text{kN} \ \{974\text{kgf}\}$$
$$K_s = K_t \cdot \tan\alpha = 9.55\times\tan20^\circ$$
$$= 3.48\text{kN} \ \{355\text{kgf}\}$$
$$K_r = \sqrt{K_t^2 + K_s^2} = \sqrt{9.55^2 + 3.48^2}$$
$$= 10.16\text{kN} \ \{1{,}040\text{kgf}\}$$

The radial loads for bearings Ⅰ and Ⅱ are:

$$F_{r\,\mathrm{I}} = \frac{100}{170} K_r = \frac{100}{170}\times10.16 = 5.98\text{kN} \ \{610\text{kgf}\}$$

$$F_{r\,\mathrm{II}} = \frac{70}{170} K_r = \frac{70}{170}\times10.16 = 4.18\text{kN} \ \{426\text{kgf}\}$$

$$\frac{0.5F_{r\,\mathrm{I}}}{Y_{\mathrm{I}}} = 1.87 > \frac{0.5F_{r\,\mathrm{II}}}{Y_{\mathrm{II}}} = 1.25$$

From **Table 4.5**, equivalent radial load:

$$P_{r\,\mathrm{I}} = F_{r\,\mathrm{I}} = 5.98\text{kN} \ \{610\text{kgf}\}$$

$$P_{r\,\mathrm{II}} = XF_{r\,\mathrm{II}} + Y_{\mathrm{II}} \frac{0.5F_{r\,\mathrm{I}}}{Y_{\mathrm{I}}}$$
$$= 0.4\times4.18 + 1.67\times1.87$$
$$= 4.79\text{kN} \ \{489\text{kgf}\}$$

From formula (3.5) and **Fig. 3.1** the life factor, f_h, for each bearing is:

$$f_{h\,\mathrm{I}} = f_n \frac{C_{r\,\mathrm{I}}}{P_{r\,\mathrm{I}}} = 0.293\times54.5/5.98 = 2.67$$

$$f_{h\,\mathrm{II}} = f_n \frac{C_{r\,\mathrm{II}}}{P_{r\,\mathrm{II}}} = 0.293\times42.0/4.79 = 2.57$$

Therefore: a_2 = 1.4 (4T-tapered roller bearings shown in **B-144**)

$$L_{h1} = 13{,}200\times a_2$$
$$= 13{,}200\times1.4$$
$$= 18{,}480 \text{ hour}$$
$$L_{h2} = 11{,}600\times a_2$$
$$= 11{,}600\times1.4$$
$$= 16{,}240 \text{ hour}$$

The combined bearing life, L_h, from formula (3.3) is:

$$L_h = \frac{1}{\left(\frac{1}{L_{h1}^{\,e}} + \frac{1}{L_{h2}^{\,e}}\right)^{1/e}}$$

$$= \frac{1}{\left(\frac{1}{18{,}480^{9/8}} + \frac{1}{16{,}240^{9/8}}\right)^{8/9}}$$

$$= 9{,}330 \text{ hour}$$

(Example 5)
Find the mean load for spherical roller bearing **23932** (L_a = 320 kN {33,000 kgf}) when operated under the fluctuating conditions shown in **Table 4.6**.

Table 4.6

Condition No. i	Operating time ϕ_i %	Radial load F_{ri} kN {kgf}	Axial load F_{ai} kN {kgf}	Revolution n_i min^{-1}
1	5	10 {1020}	2 {204}	1200
2	10	12 {1220}	4 {408}	1000
3	60	20 {2040}	6 {612}	800
4	15	25 {2550}	7 {714}	600
5	10	30 {3060}	10 {1020}	400

The equivalent radial load, P_r, for each operating condition is found by using formula (4.17) and shown in **Table 4.7**. Because all the values for F_{ri} and F_{ai} from the bearing tables are greater than $F_a / F_r > e = 0.18$, $X = 0.67$, $Y_2 = 5.50$.

$$P_{ri} = XF_{ri} + Y_2 F_{ai} = 0.67F_{ri} + 5.50F_{ai}$$

From formula (4.12) the mean load, F_m, is:

$$F_m = \left\{ \frac{\Sigma (P_{ri}^{10/3} \cdot n_i \cdot \phi_i)}{\Sigma (n_i \cdot \phi_i)} \right\}^{3/10} = 48.1\text{kN} \ \{4{,}906\text{kgf}\}$$

Table 4.7

Condition No. i	Equivalent radial load. P_{ri} kN {kgf}
1	17.7 {1805}
2	30.0 {3060}
3	46.4 {4733}
4	55.3 {5641}
5	75.1 {7660}

(Example 6)
Find the threshold values for rating life time and allowable axial load when cylindrical roller bearing NUP312 is used under the following conditions:
Provided that intermittent axial load and oil lubricant.

Radial load $F_r = 10\text{kN}$ {1,020kgf}
Rotational speed $n = 2{,}000$ min^{-1}

Radial load is:

$P_r = F_r = 10\text{kN}$ {1,020kgf}

The speed factor of cylindrical roller bearing, f_n, at $n =$ 2,000 min^{-1}, from **Table 3.1**

$$f_n = \left(\frac{33.3}{2{,}000} \right)^{3/10} = 0.293$$

The life factor, f_h, from formula (3.4)

$$f_h = 0.293 \times \frac{124}{10} = 3.63$$

Therefore the basic rated life, L_{10h} , from **Table 3.1**

$L_{10h} = 500 \times 3.63^{10/3}$ 37,000

And next, allowable axial load of cylindrical roller bearing is shown in page B-93.

In formula (1) on page B-93, based on NUP312 from Table 4 on page B-93, k = 0.065.

$d_p = (60 + 130)/2 = 95\text{mm}$, $n = 2{,}000$ min^{-1}

Take into consideration that intermittent axial load.

$d_p \cdot n \times 10^4 = 19 \times 10^4$

In **Fig. 1** on page B-93, $d_p \cdot n = 19 \times 10^4$. In the case of intermittent axial load, allowable surface pressure at the lip P_t = 40 MPa.

Therefore the allowable axial load, P_t, following

$P_z = 0.065 \times 60^2 \times 40 = 9{,}360\text{N}$ {954kgf}

Based on **Table 4** of page B-93, it is within the limits of $F_{a\,max} < 0.4 \times 10{,}000 = 4{,}000$ N. Therefore $P_t < 4{,}000$ N {408 kgf}.

5. Boundary Dimensions and Bearing Number Codes

5.1 Boundary dimensions

A rolling bearing's major dimensions, known as "boundary dimensions," are shown in **Figs. 5.1** - **5.3**. To facilitate international bearing interchangeability and economical bearing production, bearing boundary dimensions have been standardized by the International Standards Organization (ISO). In Japan, rolling bearing boundary dimensions are regulated by Japanese Industrial Standards (JIS B 1512).

Those boundary dimensions which have been standardized include: bearing bore diameter, outside diameter, width/height, and chamfer dimensions - all important dimensions when considering the compatibility of shafts, bearings, and housings. However, as a general rule, bearing internal construction dimensions are not covered by these dimensions.

For metric series rolling bearings there are 90 standardized bore diameters (d) ranging in size from 0.6mm - 2,500mm.

Outer diameter dimensions (D) for radial bearings with standardized bore diameter dimensions are covered in the "diameter series;" their corresponding width dimensions (B) are covered in the "width series." For thrust bearings there is no width series; instead, these dimensions are covered in the "height series." The combination of all these series is known as the "dimension series." All series numbers are shown in **Table 5.1**.

Although many rolling bearing dimensions are standardized, and have been listed here for purposes of

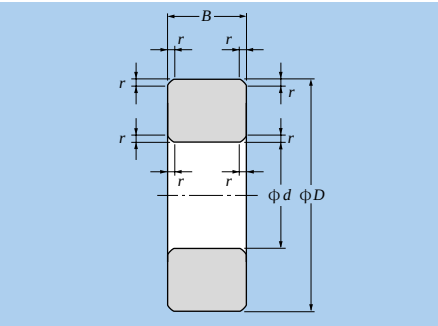

Fig. 5.1 Radial bearings (excluding tapered roller bearings)

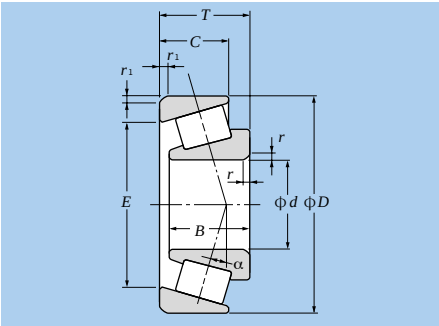

Fig. 5.2 Tapered roller bearings

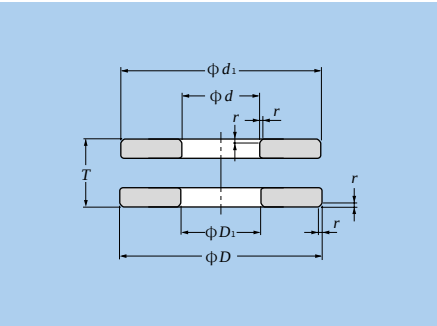

Fig. 5.3 Single direction thrust bearings

Table 5.1 Dimension series numbers

	Dimension series				
	Diameter series (outer diameter dimensions)		Width series (width dimensions)	Height series (height dimensions)	Reference diagram
Radial bearings (excluding tapered roller bearings)	number	7, 8, 9, 0, 1, 2, 3, 4	8, 0, 1, 2, 3, 4, 5, 6	———	**Diagram 5.4**
	dimensions	small ◄——► large	small ◄——► large		
Tapered roller bearings	number	9, 0, 1, 2, 3	0, 1, 2, 3	———	**Diagram 5.5**
	dimensions	small ◄——► large	small ◄——► large		
Thrust bearings	number	0, 1, 2, 3, 4	———	7, 9, 1, 2	**Diagram 5.6**
	dimensions	small ◄——► large		small ◄——► large	

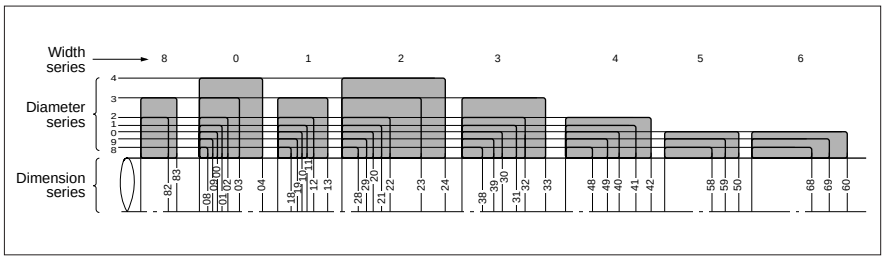

Fig. 5.4 Dimension series for radial bearings (excluding tapered roller bearings; diameter series 7 has been omitted)

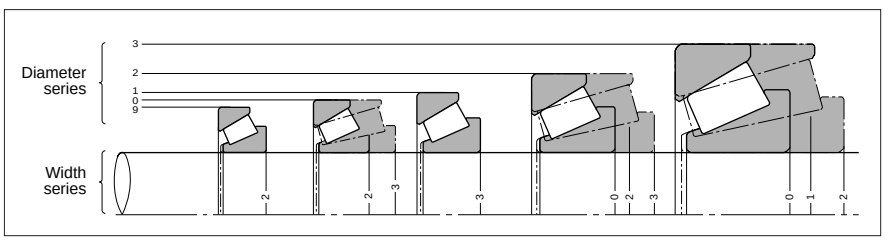

Fig. 5.5 Dimension series for tapered roller bearings

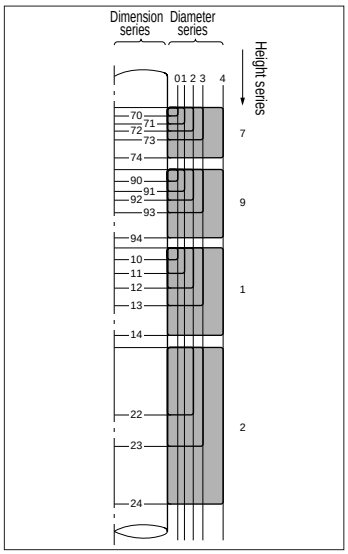

Fig. 5.6 Dimension series for thrust bearings (excluding diameter series 5)

future standardization, there are many standard bearing dimensions which are not presently manufactured.

Boundary dimensions for radial bearings (excluding tapered roller bearings) are shown in the attached tables.

5.2 Bearing numbers

Rolling bearing part numbers indicate bearing type, dimensions, tolerances, internal construction, and other related specifications. Bearing numbers are comprised of a "basic number" followed by "supplementary codes." The makeup and order of bearing numbers is shown in **Table 5.2**.

The basic number indicates general information about a bearing, such as its fundamental type, boundary dimensions, series number, bore diameter code and contact angle. The supplementary codes derive from prefixes and suffixes which indicate a bearing's tolerances, internal clearances, and related specifications.

(Bearing number examples)

6205ZZC3／2A

- Shell Alvania 2 grease
- Radial internal clearance C3
- Shielded (both)
- Nominal bore diameter 25mm
- Diameter series 2
- **Deep groove ball bearing**

23034BD1

- Lubrication hole/lubrication groove (when outer diameter is less than 320mm)
- Type B
- Nominal bore diameter 170mm
- Dimension series 0
- Width series 3
- **Spherical roller bearing**

7012CDB／GMP4

- Tolerances JIS Class 4
- Medium preload
- Back-to-back duplex arrangement
- Contact angle 15°
- Nominal bore diameter 60mm
- Dimension series 0
- **Angular contact ball bearing**

240／750BK30

- Bore diameter: tapered inner ring bore, standard taper ratio 1:30
- Type B
- Bore diameter 750mm
- Dimension series 0
- Width series 4
- **Spherical roller bearing**

NU320G1C3

- Radial internal clearance C3
- High strength machined brass rivetless cage with square holes
- Nominal bore diameter 100mm
- Dimension series 3
- **Cylindrical roller bearing NU type**

51120L1P5

- Tolerances JIS Class 5
- High strength, machined brass cage
- Nominal bore diameter 100mm
- Diameter series 1
- Height series 1
- **Thrust ball bearing**

4T－30208

- Nominal bore diameter 40mm
- Diameter series 2
- Width series 0
- **Tapered roller bearing**
- Spec. 4T

Table 5.2 Bearing number composition and arrangement

Supplementary prefix code Special application/material/ heat treatment code		Basic number Bearing series Bearing series code	Dimension series code Width/height series ❶	Diameter series	Bore diameter code Code	bore diameter mm	Contact angle code Code ❶	Contact angle
4T:	4T tapered roller bearings	**Deep groove ball bearings (type code 6)**			/0.6	0.6	**Angular contact ball bearings**	
ET:	ET tapered roller bearings	68	(1)	8	/1.5	1.5	(A)	Standard contact angle 30°
ETA:	ET+special heat treatment	69	(1)	9	/2.5	2.5	B	Standard contact angle 40°
E:	Bearing using case hardened steel	60	(1)	0			C	Standard contact angle 15°
EA:	Bearing made of nitride-treated case hardened steel	62	(0)	2	1	1	**Tapered roller bearings**	
TA:	Bearing made of nitride-treated bearing steel (SUJ3)	63	(0)	3	⋮	⋮	(B)	Contact angle over 10° to/including 17°
TM:	Bearing made of special heat-treated bearing steel (SUJ3)	**Angular contact ball bearings (type code 7)**			9	9	C	
F:	Stainless steel bearings	78	(1)	8			D	Contact angle over 17° to/including 24°
N:	High speed steel bearings	79	(1)	9	00	10		Contact angle over 24° to/including 32°
M:	Plated bearings	70	(1)	0	01	12		
5S:	Ceramic rolling element bearings	72	(0)	2	02	15		
HL:	HL roller bearings	73	(0)	3	03	17		
ECO:	ECO-Top tapered roller bearings	**Self-aligning ball bearings (type code 1,2)**						
LH:	Bearing made of bearing steel that provides long life at high temperatures (STJ2), which is treated to stabilize dimensions at temperatures up to 250°C	12	(0)	2				
TS3:	Dimension stabilized bearing for high temperature use (to 200°C)	13	(0)	3	/22	22		
TS4:	Dimension stabilized bearing for high temperature use (to 250°C)	22	(2)	2	/28	28		
		23	(2)	3	/32	32		
		Cylindrical roller bearings (type code NU, N, NF, NNU, NN, etc.)						
		NU10	1	0	04	20		
		NU2	(0)	2	05	25		
		NU22	2	2	06	30		
		NU3	(0)	3	⋮	⋮		
		NU23	2	3	88	440		
		NU4	(0)	4	92	460		
		NNU49	4	9	96	480		
		NN30	3	0				
		Tapered roller bearings (type code 3)						
		329X	2	9	/500	500		
		320X	2	0	/530	530		
		302	0	2	/560	560		
		322	2	2		⋮		
		303	0	3	/2,360	2,360		
		303D	0	3	/2,500	2,500		
		313X	1	3				
		323	2	3				
		Spherical roller bearings (type code 2)						
		239	3	9				
		230	3	0				
		240	4	0				
		231	3	1				
		241	4	1				
		222	2	2				
		232	3	2				
		213	1	3				
		223	2	3				
		Single direction thrust ball bearings (type code 5)						
		511	1	1				
		512	1	2				
		513	1	3				
		514	1	4				
		Cylindrical roller thrust bearings (type code 8)						
		811	1	1				
		812	1	2				
		893	9	3				
		Spherical thrust roller bearings (type code 2)						
		292	9	2				
		293	9	3				
		294	9	4				

❶ Codes in ( ) are not shown in nominal numbers.
Note: Please consult NTN Engineering concerning bearing series codes, and supplementary prefix/suffix codes not listed in the above table.

Supplementary suffix codes							
Internal modifications code	cage code	Seal / Shield code	External configuration code	Duplex arrangement code	Internal clearance /preload code	Tolerance code	Lubrication code
U: Internationally interchangeable tapered roller bearings R: Non-internationally interchangeable tapered roller bearings ST: Low torque tapered roller bearings HT: High axial load use cylindrical roller bearings	L1: High strength, machined brass cage F1: Machined carbon steel cage G1: High strength machined brass rivetless cage with square holes, G2: Pin type cage J: Pressed steel cage T2: Plastic mold cage	LLB: Synthetic rubber seal (non-contact type) LLU: Synthetic rubber seal (contact type) LLH: Synthetic rubber seal (low-torque type) ZZ: Steel shield	K: Tapered inner ring bore, standard taper ratio 1:12 K30: Tapered inner ring bore, standard taper ratio 1:30 N: With snap ring groove NR: With snap ring D: With oil hole D1: Lubrication hole/lubrication groove	DB: Back-to-back arrangement DF: Face-to-face arrangement DT: Tandem arrangement D2: Two matched, paired bearings G: Flush ground +α: Spacer (α = spacer's standard width dimensions)	C2: Internal clearance less than normal (CN): Normal clearance C3: Internal clearance greater than normal C4: Internal clearance greater than C3 C5: Internal clearance greater than C4 CM: Radial internal clearance for electric motor use /GL: Light preload /GN: Normal preload /GM: Medium preload /GH: Heavy preload	P6: JIS Class 6 P5: JIS Class 5 P4: JIS Class 4 P2: JIS Class 2 2: ABMA Class 2 3: ABMA Class 3 0: ABMA Class 0 00: ABMA Class 00	/2A: Shell Alvania 2 grease /3A: Shell Alvania 3 grease /8A: Shell Alvania EP2 grease /5K: MULTEMP SRL /LX11: Barierta JFE552 /LP03: Thermosetting grease (grease for poly-lube bearings)

6. Bearing Tolerances

6.1 Dimensional accuracy and running accuracy

Bearing “tolerances” or dimensional accuracy and running accuracy, are regulated by ISO and JIS B 1514 standards (rolling bearing tolerances). For dimensional accuracy, these standards prescribe the tolerances necessary when installing bearings on shafts or in housings. Running accuracy is defined as the allowable limits for bearing runout during operation.

Dimensional accuracy

Dimensional accuracy constitutes the acceptable values for bore diameter, outer diameter, assembled bearing width, and bore diameter uniformity as seen in chamfer dimensions, allowable inner ring tapered bore deviation and shape error. Also included are, average bore diameter variation, outer diameter variation, average outer diameter unevenness, as well as raceway width and height variation (for thrust bearings).

Running accuracy

Running accuracy constitutes the acceptable values for inner and outer ring radial runout and axial runout, inner ring side runout, and outer ring outer diameter runout.

Allowable rolling bearing tolerances have been established according to precision classes. Bearing precision is stipulated as JIS class 6, class 5, class 4, or class 2, with precision rising from ordinary precision indicated by class 0.

Table 6.1 indicates which standards and precision classes are applicable to the major bearing types. **Table 6.2** shows a relative comparison between JIS B 1514 precision class standards and other standards. For greater detail on allowable limitations and values, refer to **Tables 6.3** - **6.9**. Allowable values for chamfer dimensions are shown in **Table 6.10**, and allowable limitations and values for radial bearing inner ring tapered bores are shown in **Table 6.11**.

Table 6.1 Bearing types and applicable tolerance

Bearing type		Applicable standard	Tolerance class					Tolerance table
Deep groove ball bearings		JIS B 1514 (ISO492)	class 0	class 6	class 5	class 4	class 2	Table 6.3
Angular contact ball bearings			class 0	class 6	class 5	class 4	class 2	
Self-aligning ball bearings			class 0	—	—	—	—	
Cylindrical roller bearigns			class 0	class 6	class 5	class 4	class 2	
Needle roller bearings			class 0	class 6	class 5	class 4	—	
Spherical roller bearings			class 0	—	—	—	—	
Tapered roller bearings	metric	JIS B 1514	class 0,6X	class 6	class 5	class 5	—	Table 6.4
	Inch	ANSI/ABMA Std.19	class 4	class 2	class 3	class 0	class 00	Table 6.5
	J series	ANSI/ABMA Std.19.1	class K	class N	class C	class B	class A	Table 6.6
Thrust ball bearings		JIS B 1514 (ISO199)	class 0	class 6	class 5	class 4	—	Table 6.7
Spherical roller thrust bearings			class 0	—	—	—	—	Table 6.8
Double direction angular contact thrust ball bearings		NTN standard	—	—	class 5	class 4	—	Table 6.9

Table 6.2 Comparison of tolerance classifications of national standards

Standard	Applicable standerd	Tolerance Class					Bearing Types
Japanese industrial standard (JIS)	JIS B 1514	Class 0,6X	Class 6	Class 5	Class 4	Class 2	All type
International Organization for Standardization (ISO)	ISO 492	Normal class Class 6X	Class 6	Class 5	Class 4	Class 2	Radial bearings
	ISO 199	Normal Class	Class 6	Class 5	Class 4	—	Thrust ball bearings
	ISO 578	Class 4	—	Class 3	Class 0	Class 00	Tapered roller bearings (Inch series)
	ISO 1224	—	—	Class 5A	Class 4A	—	Precision instrument bearings
Deutsches Institut fur Normung(DIN)	DIN 620	P0	P6	P5	P4	P2	All type
American National Standards Institute (ANSI)	ANSI/ABMA Std.20 ❶	ABEC-1 RBEC-1	ABEC-3 RBEC-3	ABEC-5 RBEC-5	ABEC-7	ABEC-9	Radial bearings (Except tapered roller bearings)
American Bearing Manufacturer's Association (ABMA)	ANSI/ABMA Std.19.1	Class K	Class N	Class C	Class B	Class A	Tapered roller bearings (Metric series)
	ANSI/ABMA Std.19	Class 4	Class 2	Class 3	Class 0	Class 00	Tapered roller bearings (Inch series)

❶ "ABEC" is applied for ball bearings and "RBEC" for roller bearings.

Notes 1: JIS B 1514, ISO 492 and 199, and DIN 620 have the same specification level.

2: The tolerance and allowance of JIS B 1514 are a little different from those of ABMA standards.

Table 6.3 Tolerance of radial bearings (Except tapered roller bearings)
Table 6.3 (1) Inner rings

Nominal bore diameter d mm		Dimensional tolerance of mean bore diameter within plane Δ_{dmp}										Bore diameter variation V_{dp}														
												diameter series 9					diameter series 0.1					diameter series 2.3.4				
		class 0		class 6		class 5		class 4 [1]		class 2 [1]		class 0	class 6	class 5	class 4	class 2	class 0	class 6	class 5	class 4	class 2	class 0	class 6	class 5	class 4	class 2
over	incl.	high	low	high	low	high	low	high	low	high	low	max					max					max				
0.6 [4]	2.5	0	-8	0	-7	0	-5	0	-4	0	-2.5	10	9	5	4	2.5	8	7	4	3	2.5	6	5	4	3	2.5
2.5	10	0	-8	0	-7	0	-5	0	-4	0	-2.5	10	9	5	4	2.5	8	7	4	3	2.5	6	5	4	3	2.5
10	18	0	-8	0	-7	0	-5	0	-4	0	-2.5	10	9	5	4	2.5	8	7	4	3	2.5	6	5	4	3	2.5
18	30	0	-10	0	-8	0	-6	0	-5	0	-2.5	13	10	6	5	2.5	10	8	5	4	2.5	8	6	5	4	2.5
30	50	0	-12	0	-10	0	-8	0	-6	0	-2.5	15	13	8	6	2.5	12	10	6	5	2.5	9	8	6	5	2.5
50	80	0	-15	0	-12	0	-9	0	-7	0	-4	19	15	9	7	4	19	15	7	5	4	11	9	7	5	4
80	120	0	-20	0	-15	0	-10	0	-8	0	-5	25	19	10	8	5	25	19	8	6	5	15	11	8	6	5
120	150	0	-25	0	-18	0	-13	0	-10	0	-7	31	23	13	10	7	31	23	10	8	7	19	14	10	8	7
150	180	0	-25	0	-18	0	-13	0	-10	0	-7	31	23	13	10	7	31	23	10	8	7	19	14	10	8	7
180	250	0	-30	0	-22	0	-15	0	-12	0	-8	38	28	15	12	8	38	28	12	9	8	23	17	12	9	8
250	315	0	-35	0	-25	0	-18	—	—	—	—	44	31	18	—	—	44	31	14	—	—	26	19	14	—	—
315	400	0	-40	0	-30	0	-23	—	—	—	—	50	38	23	—	—	50	38	18	—	—	30	23	18	—	—
400	500	0	-45	0	-35	—	—	—	—	—	—	56	44	—	—	—	56	44	—	—	—	34	26	—	—	—
500	630	0	-50	0	-40	—	—	—	—	—	—	63	50	—	—	—	63	50	—	—	—	38	30	—	—	—
630	800	0	-75	—	—	—	—	—	—	—	—	—	—	—	—	—	—	—	—	—	—	—	—	—	—	—
800	1 000	0	-100	—	—	—	—	—	—	—	—	—	—	—	—	—	—	—	—	—	—	—	—	—	—	—
1 000	1 250	0	-125	—	—	—	—	—	—	—	—	—	—	—	—	—	—	—	—	—	—	—	—	—	—	—
1 250	1 600	0	-160	—	—	—	—	—	—	—	—	—	—	—	—	—	—	—	—	—	—	—	—	—	—	—
1 600	2 000	0	-200	—	—	—	—	—	—	—	—	—	—	—	—	—	—	—	—	—	—	—	—	—	—	—

[1] The dimensional difference Δ_{ds} of bore diameter to applied for class 4 and 2 is the same as the tolerance of dimentional difference Δ_{dmp} of average bore diameter. However, the dimensional difference is applied to diameter series 0, 1, 2, 3 and 4 against Class 4, and to all the diameter series against Class 2.

Table 6.3 (2) Outer rings

Nominal outside diameter D mm		Dimensional tolerance of mean outside diameter within plane Δ_{Dmp}										Outside diameter variation [6] V_{Dp} open type														
												diameter series 9					diameter series 0.1					diameter series 2.3.4				
		class 0		class 6		class 5		class 4 [5]		class 2 [5]		class 0	class 6	class 5	class 4	class 2	class 0	class 6	class 5	class 4	class 2	class 0	class 6	class 5	class 4	class 2
over	incl.	high	low	high	low	high	low	high	low	high	low	max					max					max				
2.5 [8]	6	0	-8	0	-7	0	-5	0	-4	0	-2.5	10	9	5	4	2.5	8	7	4	3	2.5	6	5	4	3	2.5
6	18	0	-8	0	-7	0	-5	0	-4	0	-2.5	10	9	5	4	2.5	8	7	4	3	2.5	6	5	4	3	2.5
18	30	0	-9	0	-8	0	-6	0	-5	0	-4	12	10	6	5	4	9	8	5	4	4	7	6	5	4	4
30	50	0	-11	0	-9	0	-7	0	-6	0	-4	14	11	7	6	4	11	9	5	5	4	8	7	5	5	4
50	80	0	-13	0	-11	0	-9	0	-7	0	-4	16	14	9	7	4	13	11	7	5	4	10	8	7	5	4
80	120	0	-15	0	-13	0	-10	0	-8	0	-5	19	16	10	8	5	19	16	8	6	5	11	10	8	6	5
120	150	0	-18	0	-15	0	-11	0	-9	0	-5	23	19	11	9	5	23	19	8	7	5	14	11	8	7	5
150	180	0	-25	0	-18	0	-13	0	-10	0	-7	31	23	13	10	7	31	23	10	8	7	19	14	10	8	7
180	250	0	-30	0	-20	0	-15	0	-11	0	-8	38	25	15	11	8	38	25	11	8	8	23	15	11	8	8
250	315	0	-35	0	-25	0	-18	0	-13	0	-8	44	31	18	13	8	44	31	14	10	8	26	19	14	10	8
315	400	0	-40	0	-28	0	-20	0	-15	0	-10	50	35	20	15	10	50	35	15	11	10	30	21	15	11	10
400	500	0	-45	0	-33	0	-23	—	—	—	—	56	41	23	—	—	56	41	17	—	—	34	25	17	—	—
500	630	0	-50	0	-38	0	-28	—	—	—	—	63	48	28	—	—	63	48	21	—	—	38	29	21	—	—
630	800	0	-75	0	-45	0	-35	—	—	—	—	94	56	35	—	—	94	56	26	—	—	55	34	26	—	—
800	1 000	0	-100	0	-60	—	—	—	—	—	—	125	75	—	—	—	125	75	—	—	—	75	45	—	—	—
1 000	1 250	0	-125	—	—	—	—	—	—	—	—	—	—	—	—	—	—	—	—	—	—	—	—	—	—	—
1 250	1 600	0	-160	—	—	—	—	—	—	—	—	—	—	—	—	—	—	—	—	—	—	—	—	—	—	—
1 600	2 000	0	-200	—	—	—	—	—	—	—	—	—	—	—	—	—	—	—	—	—	—	—	—	—	—	—
2 000	2 500	0	-250	—	—	—	—	—	—	—	—	—	—	—	—	—	—	—	—	—	—	—	—	—	—	—

[5] The dimensional difference Δ_{Ds} of outer diameter to be applied for classes 4 and 2 is the same as the tolerance of dimensional difference Δ_{Dmp} of average outer diameter. However, the dimensional difference is applied to diameter series 0, 1, 2, 3 and 4 against Class 4, and also to all the diameter series against Class 2.

Unit μm

Mean bore diameter variation V_{dmp}					Inner ring radial runout K_{ia}					Side runout with bore S_d			Inner ring axial runout S_{ia} ❷			Inner ring width deviation Δ_{Bs}								Inner ring width variation V_{Bs}				
																normal						modified ❸								
class 0	class 6	class 5	class 4	class 2	class 0	class 6	class 5	class 4	class 2	class 5	class 4	class 2	class 5	class 4	class 2	class 0,6		class 5,4		class 2		class 0,6		class 5,4		class 0	class 6	class 5	class 4	class 2
max					max					max			max			high	low	high	low	high	low	high	low	high	low	max				
6	5	3	2	1.5	10	5	4	2.5	1.5	7	3	1.5	7	3	1.5	0	-40	0	-40	0	-40	—	—	0	-250	12	12	5	2.5	1.5
6	5	3	2	1.5	10	6	4	2.5	1.5	7	3	1.5	7	3	1.5	0	-120	0	-40	0	-40	0	-250	0	-250	15	15	5	2.5	1.5
6	5	3	2	1.5	10	7	4	2.5	1.5	7	3	1.5	7	3	1.5	0	-120	0	-80	0	-80	0	-250	0	-250	20	20	5	2.5	1.5
8	6	3	2.5	1.5	13	8	4	3	2.5	8	4	1.5	8	4	2.5	0	-120	0	-120	0	-120	0	-250	0	-250	20	20	5	2.5	1.5
9	8	4	3	1.5	15	10	5	4	2.5	8	4	1.5	8	4	2.5	0	-120	0	-120	0	-120	0	-250	0	-250	20	20	5	3	1.5
11	9	5	3.5	2	20	10	5	4	2.5	8	5	1.5	8	5	2.5	0	-150	0	-150	0	-150	0	-380	0	-250	25	25	6	4	1.5
15	11	5	4	2.5	25	13	6	5	2.5	9	5	2.5	9	5	2.5	0	-200	0	-200	0	-200	0	-380	0	-380	25	25	7	4	2.5
19	14	7	5	3.5	30	18	8	6	2.5	10	6	2.5	10	7	2.5	0	-250	0	-250	0	-250	0	-500	0	-380	30	30	8	5	2.5
19	14	7	5	3.5	30	18	8	6	5	10	6	4	10	7	5	0	-250	0	-250	0	-250	0	-500	0	-380	30	30	8	5	4
23	17	8	6	4	40	20	10	8	5	11	7	5	13	8	5	0	-300	0	-300	0	-300	0	-500	0	-500	30	30	10	6	5
26	19	9	—	—	50	25	13	—	—	13	—	—	15	—	—	0	-350	0	—	—	—	0	-500	0	—	35	35	13	—	—
30	23	12	—	—	60	30	15	—	—	15	—	—	20	—	—	0	-400	0	—	—	—	0	-630	0	—	40	40	15	—	—
34	26	—	—	—	65	35	—	—	—	—	—	—	—	—	—	0	-450	—	—	—	—	—	—	—	—	50	45	—	—	—
38	30	—	—	—	70	40	—	—	—	—	—	—	—	—	—	0	-500	—	—	—	—	—	—	—	—	60	50	—	—	—
55	—	—	—	—	80	—	—	—	—	—	—	—	—	—	—	0	—	—	—	—	—	—	—	—	—	70	—	—	—	—
75	—	—	—	—	90	—	—	—	—	—	—	—	—	—	—	0	—	—	—	—	—	—	—	—	—	80	—	—	—	—
94	—	—	—	—	100	—	—	—	—	—	—	—	—	—	—	0	—	—	—	—	—	—	—	—	—	100	—	—	—	—
120	—	—	—	—	120	—	—	—	—	—	—	—	—	—	—	0	—	—	—	—	—	—	—	—	—	120	—	—	—	—
150	—	—	—	—	140	—	—	—	—	—	—	—	—	—	—	0	—	—	—	—	—	—	—	—	—	140	—	—	—	—

❷ Applies to ball bearings such as deep groove ball bearings and angular ball bearings.
❸ To be applied for individual raceway rings manufactured for combined bearing use.
❹ Nominal bore diameter of bearings of 0.6 mm is included in this dimensional division.

Unit μm

Outside diameter variation V_{DP} ❻ Sealed/shield bearings diameter series		Mean bore diameter variation V_{Dmp}					Outer ring radial runout K_{ea}					Outside surface inclination S_D			Outside ring axial runout S_{ea} ❼			Outer ring width deviation Δ_{Cs}	Outer ring width variation V_{Cs}			
2,3,4 class 0	0,1,2,3,4 class 6	class 0	class 6	class 5	class 4	class 2	class 0	class 6	class 5	class 4	class 2	class 5	class 4	class 2	class 5	class 4	class 2	all type	class 0,6	class 5	class 4	class 2
max		max					max					max			max				max			
10	9	6	5	3	2	1.5	15	8	5	3	1.5	8	4	1.5	8	5	1.5			5	2.5	1.5
10	9	6	5	3	2	1.5	15	8	5	3	1.5	8	4	1.5	8	5	1.5	Depends on tolerance of Δ_{Bs} in relation to d of same bearing	Depends on tolerance of Δ_{Bs} in relation to d of same bearing	5	2.5	1.5
12	10	7	6	3	2.5	2	15	9	6	4	2.5	8	4	1.5	8	5	2.5			5	2.5	1.5
16	13	8	7	4	3	2	20	10	7	5	2.5	8	4	1.5	8	5	2.5			5	2.5	1.5
20	16	10	8	5	3.5	2	25	13	8	5	4	8	4	1.5	10	5	4			6	3	1.5
26	20	11	10	5	4	2.5	35	18	10	6	5	9	5	2.5	11	6	5			8	4	2.5
30	25	14	11	6	5	2.5	40	20	11	7	5	10	5	2.5	13	7	5			8	5	2.5
38	30	19	14	7	5	3.5	45	23	13	8	5	10	5	2.5	14	8	5			8	5	2.5
—	—	23	15	8	6	4	50	25	15	10	7	11	7	4	15	10	7			10	7	4
—	—	26	19	9	7	4	60	30	18	11	7	13	8	5	18	10	7			11	7	5
—	—	30	21	10	8	5	70	35	20	13	8	13	10	7	20	13	8			13	8	7
—	—	34	25	12	—	—	80	40	23	—	—	15	—	—	23	—	—			15	—	—
—	—	38	29	14	—	—	100	50	25	—	—	18	—	—	25	—	—			18	—	—
—	—	55	34	18	—	—	120	60	30	—	—	20	—	—	30	—	—			20	—	—
—	—	75	45	—	—	—	140	75	—	—	—	—	—	—	—	—	—			—	—	—
—	—	—	—	—	—	—	160	—	—	—	—	—	—	—	—	—	—			—	—	—
—	—	—	—	—	—	—	190	—	—	—	—	—	—	—	—	—	—			—	—	—
—	—	—	—	—	—	—	220	—	—	—	—	—	—	—	—	—	—			—	—	—
—	—	—	—	—	—	—	250	—	—	—	—	—	—	—	—	—	—			—	—	—

❻ To be applied in case snap rings are not installed on the bearings.
❼ Applies to ball bearings such as deep groove ball bearings and angular ball bearings.
❽ Nominal outer diameter of bearings of 2.5 mm is included in this dimensional division.

Table 6.4 Tolerance of tapered roller bearings (Metric series)

Table 6.4 (1) Inner rings

Nominal bore diameter d mm		Dimensional tolerance of mean bore diameter within plane Δ_{dmp}						Bore diameter variation V_{dp}				Mean bore diameter variation V_{dmp}				Inner ring radial runout K_{ia}				Side runout with bore S_d	
		class 0,6X		class 5,6		class 4 ❶		class 0,6X	class 6	class 5	class 4	class 0,6X	class 6	class 5	class 4	class 0,6X	class 6	class 5	class 4	class 5	class 4
over	incl.	high	low	high	low	high	low	max				max				max				max	
10	18	0	-12	0	-7	0	-5	12	7	5	4	9	5	5	4	15	7	5	3	7	3
18	30	0	-12	0	-8	0	-6	12	8	6	5	9	6	5	4	18	8	5	3	8	4
30	50	0	-12	0	-10	0	-8	12	10	8	6	9	8	5	5	20	10	6	4	8	4
50	80	0	-15	0	-12	0	-9	15	12	9	7	11	9	6	5	25	10	7	4	8	5
80	120	0	-20	0	-15	0	-10	20	15	11	8	15	11	8	5	30	13	8	5	9	5
120	180	0	-25	0	-18	0	-13	25	18	14	10	19	14	9	7	35	18	11	6	10	6
180	250	0	-30	0	-22	0	-15	30	22	17	11	23	16	11	8	50	20	13	8	11	7
250	315	0	-35	—	—	—	—	35	—	—	—	26	—	—	—	60	—	—	—	—	—
315	400	0	-40	—	—	—	—	40	—	—	—	30	—	—	—	70	—	—	—	—	—
400	500	—	—	—	—	—	—	—	—	—	—	—	—	—	—	—	—	—	—	—	—
500	630	—	—	—	—	—	—	—	—	—	—	—	—	—	—	—	—	—	—	—	—
630	800	—	—	—	—	—	—	—	—	—	—	—	—	—	—	—	—	—	—	—	—
800	1,000	—	—	—	—	—	—	—	—	—	—	—	—	—	—	—	—	—	—	—	—

❶ The dimensional difference Δ_{ds} of bore diameter to be applied for class 4 is the same as the tolerance of dimensional difference Δ_{dmp} of average bore diameter.

Table 6.4 (2) Outer rings

Nominal outside diameter D mm		Dimensional tolerance of mean outside diameter within plane D_{Dmp}						Outside diameter variation V_{Dp}				Mean bore diameter variation V_{Dmp}				Outer ring radial runout K_{ea}				Outside surface inclination S_D ❷	
		class 0,6X		class 5,6		class 4 ❸		class 0,6X	class 6	class 5	class 4	class 0,6X	class 6	class 5	class 4	class 0,6X	class 6	class 5	class 4	class 5	class 4
over	incl.	high	low	high	low	high	low	max				max				max				max	
18	30	0	-12	0	-8	0	-6	12	8	6	5	9	6	5	4	18	9	6	4	8	4
30	50	0	-14	0	-9	0	-7	14	9	7	5	11	7	5	5	20	10	7	5	8	4
50	80	0	-16	0	-11	0	-9	16	11	8	7	12	8	6	5	25	13	8	5	8	4
80	120	0	-18	0	-13	0	-10	18	13	10	8	14	10	7	5	35	18	10	6	9	5
120	150	0	-20	0	-15	0	-11	20	15	11	8	15	11	8	6	40	20	11	7	10	5
150	180	0	-25	0	-18	0	-13	25	18	14	10	19	14	9	7	45	23	13	8	10	5
180	250	0	-30	0	-20	0	-15	30	20	15	11	23	15	10	8	50	25	15	10	11	7
250	315	0	-35	0	-25	0	-18	35	25	19	14	26	19	13	9	60	30	18	11	13	8
315	400	0	-40	0	-28	0	-20	40	28	22	15	30	21	14	10	70	35	20	13	13	10
400	500	0	-45	—	—	—	—	45	—	—	—	34	—	—	—	80	—	—	—	—	—
500	630	0	-50	—	—	—	—	50	—	—	—	38	—	—	—	100	—	—	—	—	—

❷ Does not apply to bearings with flange.
❸ The dimensional difference D_{Ds} of outside diameter to be applied for class 4 is the same as the tolerance of dimensional difference D_{Dmp} of average outside diameter.

Unit μm

Inner ring axial runout S_{ia}	Inner ring width deviation Δ_{Bs}						Assembly width deviation of single-row tapered roller bearings Δ_{Ts}						Combination width deviation of double row bearings Δ_{B1s}, Δ_{C1s}		Combination width deviation of 4-row bearings Δ_{B2s}, Δ_{C2s}	
class 4	class 0,6		class 6X		class 4,5		class 0,6		class 6X		class 4,5		class 0,6,5		class 0,6,5	
max	high	low	high	low	high	low	high	low	high	low	high	low	high	low	high	low
3	0	-120	0	-50	0	-200	+200	0	+100	0	+200	-200	—	—	—	—
4	0	-120	0	-50	0	-200	+200	0	+100	0	+200	-200	—	—	—	—
4	0	-120	0	-50	0	-240	+200	0	+100	0	+200	-200	+240	-240	—	—
4	0	-150	0	-50	0	-300	+200	0	+100	0	+200	-200	+300	-300	—	—
5	0	-200	0	-50	0	-400	+200	-200	+100	0	+200	-200	+400	-400	+500	-500
7	0	-250	0	-50	0	-500	+350	-250	+150	0	+350	-250	+500	-500	+600	-600
8	0	-300	0	-50	0	-600	+350	-250	+150	0	+350	-250	+600	-600	+750	-750
—	0	-350	0	-50	—	—	+350	-250	+200	0	—	—	+700	-700	+900	-900
—	0	-400	0	-50	—	—	+400	-400	+200	0	—	—	+800	-800	+1 000	-1 000
—	—	—	—	—	—	—	—	—	—	—	—	—	+900	-900	+1 200	-1 200
—	—	—	—	—	—	—	—	—	—	—	—	—	+1 000	-1 000	+1 200	-1 200
—	—	—	—	—	—	—	—	—	—	—	—	—	+1 500	-1 500	+1 500	-1 500
—	—	—	—	—	—	—	—	—	—	—	—	—	+1 500	-1 500	+1 500	-1 500

Unit μm

Outer ring axial runout S_{ea}	Outer ring width deviation Δ_{Cs}			
class 4	class 0,6,5,4		class 6X ❹	
max	sup.	inf.	sup.	inf.
5	Depends on tolerance of Δ_{Bs} in relation to d of same bearing		0	-100
5			0	-100
5			0	-100
6			0	-100
7			0	-100
8			0	-100
10			0	-100
10			0	-100
13			0	-100
—			0	-100
—			0	-100

❹ Applies to bearing where d is greater than 10 mm but is less than or equal to 400 mm.

Table 6.4 (3) Effective width of outer and inner rings with roller Unit μm

Nominal bore diameter d mm		Effective width deviation of roller and inner ring assembly of tapererd roller bearing Δ_{T1s}				Tapered roller bearing outer ring effective width deviation Δ_{T2s}			
		class 0		class 6X		class 0		class 6X	
over	incl.	high	low	high	low	high	low	high	low
10	18	+100	0	+50	0	+100	0	+50	0
18	30	+100	0	+50	0	+100	0	+50	0
30	50	+100	0	+50	0	+100	0	+50	0
50	80	+100	0	+50	0	+100	0	+50	0
80	120	+100	-100	+50	0	+100	-100	+50	0
120	180	+150	-150	+50	0	+200	-100	+100	0
180	250	+150	-150	+50	0	+200	-100	+100	0
250	315	+150	-150	+100	0	+200	-100	+100	0
315	400	+200	-200	+100	0	+200	-200	+100	0

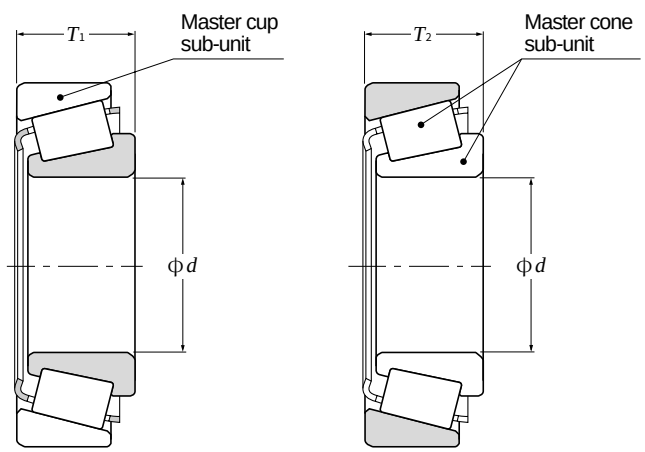

Table 6.5 Tolerance of tapered roller bearings (Inch series)

Table 6.5 (1) Inner rings

Unit μm

Nominal bore diameter d mm (inch) over	incl.	Single bore diameter deviation Δ_{ds} Class 4 high	Class 4 low	Class 2 high	Class 2 low	Class 3 high	Class 3 low	Class 0 high	Class 0 low	Class 00 high	Class 00 low
—	76.2 (3)	+13	0	+13	0	+13	0	+13	0	+8	0
76.2 (3)	266.7 (10.5)	+25	0	+25	0	+13	0	+13	0	+8	0
266.7 (10.5)	304.8 (12)	+25	0	+25	0	+13	0	+13	0	—	—
304.8 (12)	609.6 (24)	+51	0	+51	0	+25	0	—	—	—	—
609.6 (24)	914.4 (36)	+76	0	—	—	+38	0	—	—	—	—
914.4 (36)	1 219.2 (48)	+102	0	—	—	+51	0	—	—	—	—
1 219.2 (48)	—	+127	0	—	—	+76	0	—	—	—	—

Table 6.5 (2) Outer rings

Unit μm

Nominal outside diameter D mm (inch) over	incl.	Single outside diameter deviation Δ_{Ds} Class 4 high	Class 4 low	Class 2 high	Class 2 low	Class 3 high	Class 3 low	Class 0 high	Class 0 low	Class 00 high	Class 00 low
—	266.7 (10.5)	+25	0	+25	0	+13	0	+13	0	+8	0
266.7 (10.5)	304.8 (12)	+25	0	+25	0	+13	0	+13	0	—	—
304.8 (12)	609.6 (24)	+51	0	+51	0	+25	0	—	—	—	—
609.6 (24)	914.4 (36)	+76	0	+76	0	+38	0	—	—	—	—
914.4 (36)	1 219.2 (48)	+102	0	—	—	+51	0	—	—	—	—
1 219.2 (48)	—	+127	0	—	—	+76	0	—	—	—	—

Table 6.5 (3) Single-row tapered roller bearing assembly width, combination width of 4-row bearings, effective width of inner ring with rollers, effective width of outer ring

Nominal bore diameter d mm (inch) over	incl.	Nominal outside diameter D mm (inch) over	incl.	Overall width deviation of assembled single row tapered roller bearing Δ_{Ts} Class 4 high	Class 4 low	Class 2 high	Class 2 low	Class 3 high	Class 3 low	Class 0,00 high	Class 0,00 low	Overall width deviation of assembled 4-row tapered roller bearings Δ_{B2s}, Δ_{C2s} Class 4,2,3,0 high	Class 4,2,3,0 low
—	101.6 (4)			+203	0	+203	0	+203	-203	+203	-203	+1 524	-1 524
101.6 (4)	304.8 (12)			+356	-254	+203	0	+203	-203	+203	-203	+1 524	-1 524
304.8 (12)	609.6 (24)	—	508.0 (20)	+381	-381	+381	-381	+203	-203	—	—	+1 524	-1 524
304.8 (12)	609.6 (36)	508.0 (20)	—	+381	-381	+381	-381	+381	-381	—	—	+1 524	-1 524
609.6 (24)	—			+381	-381	—	—	+381	-381	—	—	+1 524	-1 524

Table 6.5 (4) Radial deflection of inner and outer rings

Unit μm

Nominal outside diameter D mm (inch) over	incl.	Inner ring radial runout K_{ia} Outer ring radial runout K_{ea} Class 4 max	Class 2 max	Class 3 max	Class 0 max	Class 00 max
—	304.8 (14)	51	38	8	4	2
304.8 (14)	609.6 (24)	51	38	18	—	—
609.6 (24)	914.4 (36)	76	51	51	—	—
914.4 (36)	—	76	—	76	—	—

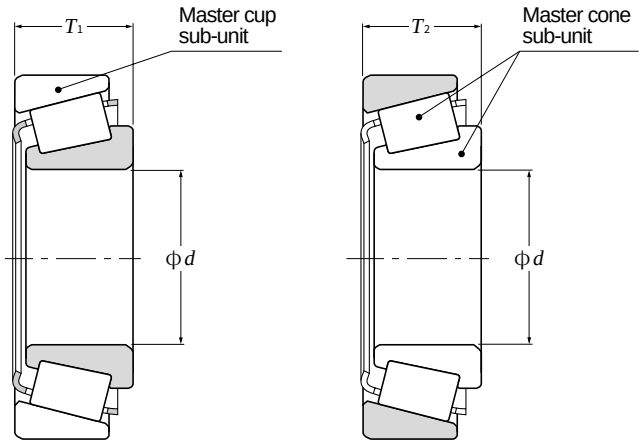

Unit μm

Effective width deviation of roller and inner ring assembly of tapered roller bearing Δ_{T1s}						Tapered roller bearing outer ring effective width deviation Δ_{T2s}					
Class 4		Class 2		Class 3		Class 4		Class 2		Class 3	
high	low	high	low	high	low	high	low	high	low	high	low
+102	0	+102	0	+102	-102	+102	0	+102	0	+102	-102
+152	-152	+102	0	+102	-102	+203	-102	+102	0	+102	-102
—	—	+178	-178 ❶	+102	-102 ❶	—	—	+203	-203 ❶	+102	-102 ❶
—	—	—	—	—	—	—	—	—	—	—	—
—	—	—	—	—	—	—	—	—	—	—	—

❶ To be applied for nominal bore diameters d of 406.400 mm (16 inch) or less.

Table 6.6 Tolerance of tapered roller bearings of J series (Metric series)

Table 6.6 (1) Inner rings

Nominal bore diameter d mm		Mean bore diameter deviation Δ_{dmp}								Bore diameter variation V_{dp}				Mean bore diameter variation V_{dmp}			
		Class K		Class N		Class C		Class B		Class K	Class N	Class C	Class B	Class K	Class N	Class C	Class B
over	incl.	high	low	high	low	high	low	high	low	max				max			
10	18	0	-12	0	-12	0	-7	0	-5	12	12	4	3	9	9	5	4
18	30	0	-12	0	-12	0	-8	0	-6	12	12	4	3	9	9	5	4
30	50	0	-12	0	-12	0	-10	0	-8	12	12	4	3	9	9	5	5
50	80	0	-15	0	-15	0	-12	0	-9	15	15	5	3	11	11	5	5
80	120	0	-20	0	-20	0	-15	0	-10	20	20	5	3	15	15	5	5
120	180	0	-25	0	-25	0	-18	0	-13	25	25	5	3	19	19	5	7
180	250	0	-30	0	-30	0	-22	0	-15	30	30	6	4	23	23	5	8

Note: Please consult NTN Engineering for Class A bearings.

Table 6.6 (2) Outer rings

Nominal outside diameter D mm		Mean outside diameter deviation Δ_{Dmp}								Outside diameter variation V_{Dp}				Mean outside diameter variation V_{Dmp}				outer ring axial runout S_{ea}
		Class K		Class N		Class C		Class B		Class K	Class N	Class C	Class B	Class K	Class N	Class C	Class B	Class B
over	incl.	high	low	high	low	high	low	high	low	max				max				max
18	30	0	-12	0	-12	0	-8	0	-6	12	12	4	3	9	9	5	4	3
30	50	0	-14	0	-14	0	-9	0	-7	14	14	4	3	11	11	5	5	3
50	80	0	-16	0	-16	0	-11	0	-9	16	16	4	3	12	12	6	5	4
80	120	0	-18	0	-18	0	-13	0	-10	18	18	5	3	14	14	7	5	4
120	150	0	-20	0	-20	0	-15	0	-11	20	20	5	3	15	15	8	6	4
150	180	0	-25	0	-25	0	-18	0	-13	25	25	5	3	19	19	9	7	5
180	250	0	-30	0	-30	0	-20	0	-15	30	30	6	4	23	23	10	8	6
250	315	0	-35	0	-35	0	-25	0	-18	35	35	8	5	26	26	13	9	6
315	400	0	-40	0	-40	0	-28	0	-20	40	40	10	5	30	30	14	10	6

Note: Please consult NTN Engineering for Class A bearings.

Table 6.6 (3) Effective width of inner and outer rings

Unit μm

Nominal bore diameter d mm		Effective width deviation of roller and inner ring assembly of tapered roller bearing Δ_{T1s}								Tapered roller bearing outer ring effective width deviation Δ_{T2s}							
		Class K		Class N		Class C		Class B		Class K		Class N		Class C		Class B	
over	incl.	high	low	high	low	high	low	high	low	high	low	high	low	high	low	high	low
10	80	+100	0	+50	0	+100	-100	*	*	+100	0	+50	0	+100	-100	*	*
80	120	+100	-100	+50	0	+100	-100	*	*	+100	-100	+50	0	+100	-100	*	*
120	180	+150	-150	+50	0	+100	-100	*	*	+200	-100	+100	0	+100	-150	*	*
180	250	+150	-150	+50	0	+100	-150	*	*	+200	-100	+100	0	+100	-150	*	*

Note 1: "*" mark are to be manufactured only for combined bearings.
2: Please consult NTN Engineering for Class A bearings.

Unit μm

Inner ring axial runout S_{ia}	Overall width deviation of assembled tapered roller bearing Δ_{Ts}							
Class	Class		Class		Class		Class	
B	K		N		C		B	
max	sup	inf	sup	inf	sup	inf	sup	inf
3	+200	0	+100	0	+200	-200	+200	-200
4	+200	0	+100	0	+200	-200	+200	-200
4	+200	0	+100	0	+200	-200	+200	-200
4	+200	0	+100	0	+200	-200	+200	-200
5	+200	-200	+100	0	+200	-200	+200	-200
7	+350	-250	+150	0	+350	-250	+200	-250
8	+350	-250	+150	0	+350	-300	+200	-300

Table 6.6 (4) Radial runout of inner and outer rings

Unit μm

Nominal outside diameter D mm		Inner ring radial runout K_{ia} and Outer ring radial runout K_{ea}			
		Class	Class	Class	Class
		K	N	C	B
over	incl.	max			
18	30	18	18	5	3
30	50	20	20	6	3
50	80	25	25	6	4
80	120	35	35	6	4
120	150	40	40	7	4
150	180	45	45	8	4
180	250	50	50	10	5
250	315	60	60	11	5
315	400	70	70	13	5

Note: Please consult NTN Engineering for Class A bearings.

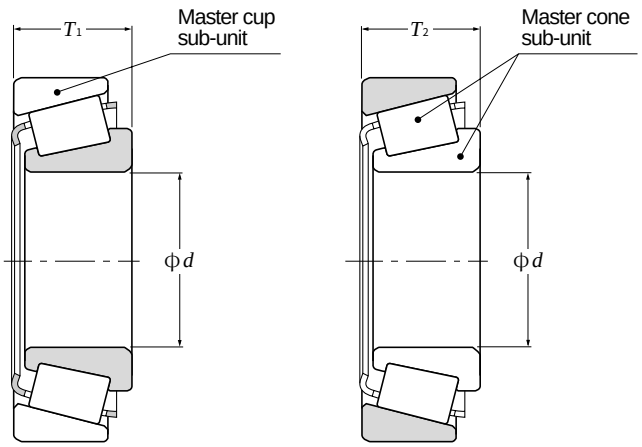

Table 6.7 Tolerance of thrust ball bearings

Table 6.7 (1) Shaft raceway disc

Unit μm

Nominal bore diameter d mm		Mean bore diameter deviation Δ_{dmp}				Bore diameter variation V_{dp}		Raceway thickness variation S_i			
		Class 0,6,5		Class 4		Class 0,6,5	Class 4	Class 0	Class 6	Class 5	Class 4
over	incl.	high	low	high	low	max		max			
—	18	0	-8	0	-7	6	5	10	5	3	2
18	30	0	-10	0	-8	8	6	10	5	3	2
30	50	0	-12	0	-10	9	8	10	6	3	2
50	80	0	-15	0	-12	11	9	10	7	4	3
80	120	0	-20	0	-15	15	11	15	8	4	3
120	180	0	-25	0	-18	19	14	15	9	5	4
180	250	0	-30	0	-22	23	17	20	10	5	4
250	315	0	-35	0	-25	26	19	25	13	7	5
315	400	0	-40	0	-30	30	23	30	15	7	5
400	500	0	-45	0	-35	34	26	30	18	9	6
500	630	0	-50	0	-40	38	30	35	21	11	7

Table 6.7 (2) Housing raceway disc

Unit μm

Nominal outside diameter D mm		Mean outside diameter deviation Δ_{Dmp}				Outside diameter variation V_{Dp}		Raceway thickness variation S_e			
		Class 0,6,5		Class 4		Class 0,6,5	Class 4	Class 0	Class 6	Class 5	Class 4
over	incl.	high	low	high	low	max		max			
10	18	0	-11	0	-7	8	5	According to the tolerance of S_1 against "d" of the same bearings			
18	30	0	-13	0	-8	10	6				
30	50	0	-16	0	-9	12	7				
50	80	0	-19	0	-11	14	8				
80	120	0	-22	0	-13	17	10				
120	180	0	-25	0	-15	19	11				
180	250	0	-30	0	-20	23	15				
250	315	0	-35	0	-25	26	19				
315	400	0	-40	0	-28	30	21				
400	500	0	-45	0	-33	34	25				
500	630	0	-50	0	-38	38	29				
630	800	0	-75	0	-45	55	34				

Table 6.7 (3) Bearing height

Unit μm

Nominal bore diameter d mm		Single direction Bearing height deviation ❶ Δ_{Ts}	
over	incl.	high	low
—	30	0	-75
30	50	0	-100
50	80	0	-125
80	120	0	-150
120	180	0	-175
180	250	0	-200
250	315	0	-225
315	400	0	-300
400	500	0	-350
500	630	0	-400

❶ This standard is applied for flat back face bearing of class 0.

Table 6.8 Tolerance of spherical thrust roller bearing

Table 6.8 (1) Shaft raceway disc

Unit μm

Nominal bore diameter d mm		Mean bore diameter deviation Δ_{dmp}		Bore diameter variation V_{dp}	Side runout with bore S_d	Bearing height deviation Δ_{Ts}	
over	incl.	high	low	max	max	high	low
50	80	0	-15	11	25	+150	-150
80	120	0	-20	15	25	+200	-200
120	180	0	-25	19	30	+250	-250
180	250	0	-30	23	30	+300	-300
250	315	0	-35	26	35	+350	-350
315	400	0	-40	30	40	+400	-400
400	500	0	-45	34	45	+450	-450

Table 6.8 (2) Housing raceway disc

Unit μm

Nominal outside diameter D mm		Single plane mean outside diameter deviation Δ_{Dmp}	
over	incl.	high	low
120	180	0	-25
180	250	0	-30
250	315	0	-35
315	400	0	-40
400	500	0	-45
500	630	0	-50
630	800	0	-75
800	1,000	0	-100

Table 6.9 Tolerance of double direction type angular contact thrust ball bearings

Table 6.9 (1) Inner rings and bearing height

Unit μm

Nominal bore diameter d mm		Mean bore diameter deviation Δ_{dmp} Bore diameter deviation Δ_{ds}				Side runout with bore S_d		Inner ring axial runout S_{ia}		Inner ring width variation V_{Bs}		Bearing height deviation Δ_{Ts}	
		Class 5		Class 4		Class 5	Class 4	Class 5	Class 4	Class 5	Class 4	Class 5, Class 4	
over	incl.	high	low	high	low	max		max		max		high	low
18	30	0	-6	0	-5	8	4	5	3	5	2.5	0	-300
30	50	0	-8	0	-6	8	4	5	3	5	3	0	-400
50	80	0	-9	0	-7	8	5	6	5	6	4	0	-500
80	120	0	-10	0	-8	9	5	6	5	7	4	0	-600
120	180	0	-13	0	-10	10	6	8	6	8	5	0	-700
180	250	0	-15	0	-12	11	7	8	6	10	6	0	-800
250	315	0	-18	0	-15	13	8	10	8	13	7	0	-900
315	400	0	-23	0	-18	15	9	13	10	15	9	0	-1,000

Table 6.9 (2) Outer rings

Unit μm

Nominal outside diameter D mm		Mean outside diameter deviation Δ_{Dmp} Outside diameter deviation Δ_{Ds}		Outside surface inclination S_D		Outer ring axial runout S_{ea}		Outer ring width variation V_{Cs}	
		Class 5	Class 4	Class 5	Class 4	Class 5	Class 4	Class 5	Class 4
over	incl.	high	low	max		max		max	
30	50	-30	-40	8	4	According to tolerance of S_{ia} against "d" of the same bearings		5	2.5
50	80	-40	-50	8	4			6	3
80	120	-50	-60	9	5			8	4
120	150	-60	-75	10	5			8	5
150	180	-60	-75	10	5			8	5
180	250	-75	-90	11	7			10	7
250	315	-90	-105	13	8			11	7
315	400	-110	-125	13	10			13	8
400	500	-120	-140	15	13			15	10

6.2 Chamfer measurements and tolerance or allowable values of tapered bore

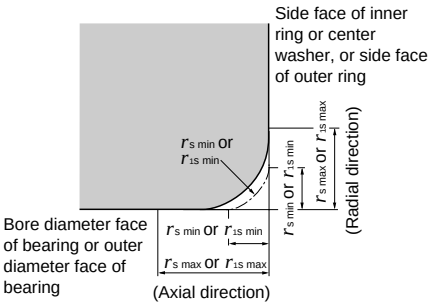

Table 6.10 Allowable critical-value of bearing chamfer

Table 6.10 (1) Radial bearing (Except tapered roller bearing)

Unit mm

$r_{s\,min}$ ❶ or $r_{1s\,min}$	Nominal bore diameter d over	incl.	$r_{s\,max}$ or $r_{1s\,max}$ Radial direction	Axial direction
0.05	—	—	0.1	0.2
0.08	—	—	0.16	0.3
0.1	—	—	0.2	0.4
0.15	—	—	0.3	0.6
0.2	—	—	0.5	0.8
0.3	—	40	0.6	1
	40	—	0.8	1
0.6	—	40	1	2
	40	—	1.3	2
1	—	50	1.5	3
	50	—	1.9	3
1.1	—	120	2	3.5
	120	—	2.5	4
1.5	—	120	2.3	4
	120	—	3	5
2	—	80	3	4.5
	80	220	3.5	5
	220	—	3.8	6
2.1	—	280	4	6.5
	280	—	4.5	7
2.5	—	100	3.8	6
	100	280	4.5	6
	280	—	5	7
3	—	280	5	8
	280	—	5.5	8
4	—	—	6.5	9
5	—	—	8	10
6	—	—	10	13
7.5	—	—	12.5	17
9.5	—	—	15	19
12	—	—	18	24
15	—	—	21	30
19	—	—	25	38

❶ These are the allowable minimum dimensions of the chamfer dimension "r" or "r_1" and are described in the dimensional table.

Table 6.10 (2) Tapered roller bearings of metric series

Unit mm

$r_{s\,min}$ ❷ or $r_{1s\,min}$	Nominal bore ❸ diameter of bearing "d" or nominal outside diameter "D" over	incl.	$r_{s\,max}$ or $r_{1s\,max}$ Radial direction	Axial direction
0.3	—	40	0.7	1.4
	40	—	0.9	1.6
0.6	—	40	1.1	1.7
	40	—	1.3	2
1	—	50	1.6	2.5
	50	—	1.9	3
1.5	—	120	2.3	3
	120	250	2.8	3.5
	250	—	3.5	4
2	—	120	2.8	4
	120	250	3.5	4.5
	250	—	4	5
2.5	—	120	3.5	5
	120	250	4	5.5
	250	—	4.5	6
3	—	120	4	5.5
	120	250	4.5	6.5
	250	400	5	7
	400	—	5.5	7.5
4	—	120	5	7
	120	250	5.5	7.5
	250	400	6	8
	400	—	6.5	8.5
5	—	180	6.5	8
	180	—	7.5	9
6	—	180	7.5	10
	180	—	9	11

❷ These are the allowable minimum dimensions of the chamfer dimension "r" or "r_1" and are described in the dimensional table.

❸ Inner rings shall be in accordance with the division of "d" and outer rings with that of "D".

Note: This standard will be applied to the bearings whose dimensional series (refer to the dimensional table) are specified in the standard of ISO 355 or JIS B 1512. For further information concerning bearings outside of these standards or tapered roller bearings using US customary unit, please contact NTN Engineering.

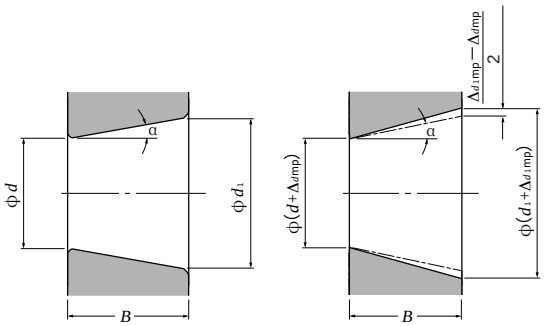

Theoretical tapered bore

Tapered bore having dimensional difference of the average bore diameter within the flat surface

Table 6.10 (3) Thrust bearings

Unit mm

$r_{s\,min}$ or $r_{1\,min}$ ❹	$r_{s\,max}$ or $r_{1s\,max}$ Radial and axial direcition
0.05	0.1
0.08	0.16
0.1	0.2
0.15	0.3
0.2	0.5
0.3	0.8
0.6	1.5
1	2.2
1.1	2.7
1.5	3.5
2	4
2.1	4.5
3	5.5
4	6.5
5	8
6	10
7.5	12.5
9.5	15
12	18
15	21
19	25

❹ These are the allowable minimum dimensions of the chamfer dimension "r" or "r_1" and are described in the dimensional table.

Table 6.11 (1) Tolerance of and tolerance values for tapered bore of radial bearings
Standard taper ratio 1:12 tapared hole (class 0) Unit μm

d mm		Δ_{dmp}		$\Delta_{d1mp} - \Delta_{dmp}$		V_{dp} ❶ ❷
over	incl.	high	low	high	low	max
	10	+ 22	0	+ 15	0	9
10	18	+ 27	0	+ 18	0	11
18	30	+ 33	0	+ 21	0	13
30	50	+ 39	0	+ 25	0	16
50	80	+ 46	0	+ 30	0	19
80	120	+ 54	0	+ 35	0	22
120	180	+ 63	0	+ 40	0	40
180	250	+ 72	0	+ 46	0	46
250	315	+ 81	0	+ 52	0	52
315	400	+ 89	0	+ 57	0	57
400	500	+ 97	0	+ 63	0	63
500	630	+110	0	+ 70	0	70
630	800	+125	0	+ 80	0	—
800	1,000	+140	0	+ 90	0	—
1,000	1,250	+165	0	+105	0	—
1,250	1,600	+195	0	+125	0	—

Table 6.11 (2) Tolerance of and tolerance values for tapered bore of radial bearings
Standard taper ratio 1:30 tapered bore (class 0) Units μm

d mm		Δ_{dmp}		$\Delta_{d1mp} - \Delta_{dmp}$		V_{dp} ❶ ❷
over	incl.	high	low	high	low	max
50	80	+15	0	+30	0	19
80	120	+20	0	+35	0	22
120	180	+25	0	+40	0	40
180	250	+30	0	+46	0	46
250	315	+35	0	+52	0	52
315	400	+40	0	+57	0	57
400	500	+45	0	+63	0	63
500	630	+50	0	+70	0	70

❶ Applies to all radial flat planes of inner ring tapered bore.
❷ Does not apply to diameter series 7 and 8.

Note: Quantifiers

For a standard taper ratio of 1:12 $d_1 = d + \frac{1}{12} B$

For a standard taper ratio of 1:30 $d_1 = d + \frac{1}{30} B$

Δ_{dmp} : Dimensional difference of the average bore diameter within the flat surface at the theoretical small end of the tapered bore.
Δ_{d1mp} : Dimensional difference of the average bore diameter within the flat surface at the theoretical large end of the tapered bore.
V_{dp} : Unevenness of the bore diameter with the flat surface
B : Nominal width of inner ring
α : Half of the tapered bore's nominal taper angle
For a standard taper ratio of 1:12 $\alpha = 2°\,23'\,9.4''$
For a standard taper ratio of 1:30 $\alpha = 0°\,57'\,7.4''$

6.3 Bearing tolerance measurement methods

For reference, measurement methods for rolling bearing tolerances are in JIS B 1515.

Table 6.12 shows some of the major methods of measuring rotation tolerances.

Table 6.12 Rotation tolerance measurement methods

Characteristic tolerance	Measurement method	
Inner ring radial runout (K_{ia})	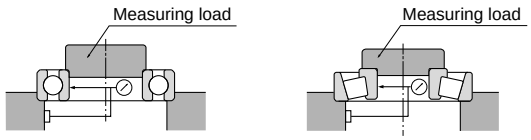	Radial runout of the inner ring is the difference between the maximum and minimum reading of the measuring device when the inner ring is turned one revolution.
Outer ring radial runout (K_{ea})	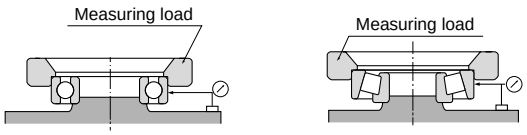	Radial runout of the outer ring is the difference between the maximum and minimum reading of the measuring device when the outer ring is turned one revolution.
Inner ring axial runout (S_{ia})	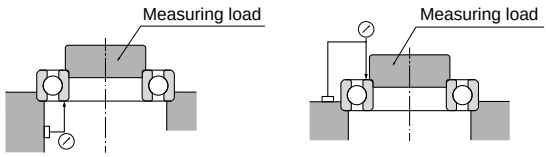	Axial runout of the inner ring is the difference between the maximum and minimum reading of the measuring device when the inner ring is turned one revolution.
Outer ring axial runout (S_{ea})	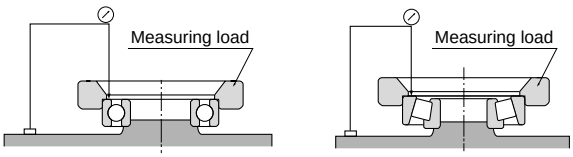	Axial runout of the outer ring is the difference between the maximum and minimum reading of the measuring device when the outer ring is turned one revolution.
Inner ring side runout with bore (S_d)	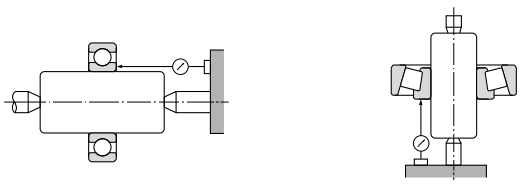	Inner ring side runout with bore is the difference between the maximum and minimum reading of the measuring device when the inner ring is turned one revolution together with the tapered mandrel.
Outer ring outside surface inclination (S_D)	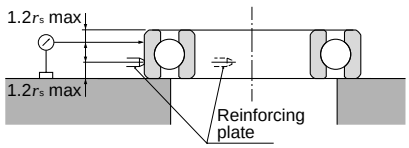	Outer ring outside surface inclination is the difference between the maximum and minimum reading of the measuring device when the outside ring is turned one revolution along the reinforcing plate.

7 Bearing Fits

7.1 Fitting

For rolling bearings, inner and outer rings are fixed on the shaft or in the housing so that relative movement does not occur between fitting surfaces during operation or under load. This relative movement between the fitting surfaces of the bearing and the shaft or housing can occur in a radial direction, an axial direction, or in the direction of rotation. Types of fitting include tight, transition and loose fitting, which may be selected depending on whether or not there is interference.

The most effective way to fix the fitting surfaces between a bearing's raceway and shaft or housing is to apply a "**tight fit**." The advantage of this tight fit for thin walled bearings is that it provides uniform load support over the entire ring circumference without any loss of load carrying capacity. However, with a tight fit, ease of installation and disassembly is lost; and when using a non-separable bearing as the floating-side bearing, axial displacement is not possible. For this reason, a tight fit cannot be recommended in all cases.

7.2 The necessity of a proper fit

In some cases, improper fit may lead to damage and shorten bearing life, therefore it is necessary to make a careful investigation in selecting a proper fit. Some of the bearing failure caused by improper fit are listed below.

- Raceway cracking, early flaking and displacement of raceway
- Raceway and shaft or housing abrasion caused by creeping and fretting corrosion
- Seizing caused by negative internal clearances
- Increased noise and deteriorated rotational accuracy due to raceway groove deformation

Please refer to insert pages A-96 ～ A-99 for information concerning diagnosis of these conditions.

7.3 Fit selection

Selection of a proper fit is dependent upon thorough analysis of bearing operating conditions, including consideration of:

- Shaft and housing material, wall thickness, finished surface accuracy, etc.
- Machinery operating conditions (nature and magnitude of load, rotational speed, temperature, etc.)

7.3.1 "Tight fit" or "Loose fit"

(1) For raceways under rotating loads, a tight fit is necessary. (Refer to **Table 7.1**) "Raceways under rotating loads" refers to raceways receiving loads rotating relative to their radial direction. For raceways under static loads, on the other hand, a loose fit is sufficient.
(Example) Rotating inner ring load = the direction of the radial load on the inner ring is rotating relatively

(2) For non-separable bearings, such as deep groove ball bearings, it is generally recommended that either the inner ring or outer ring be given a loose fit.

Table 7.1 Radial load and bearing fit

Illustration	Bearing rotation	Ring load	Fit
Static load 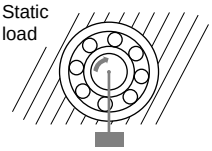	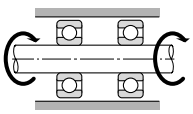 Inner ring: Rotating; Outer ring: Stationary	Rotating inner ring load	Inner ring : Tight fit
Unbalanced load 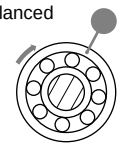	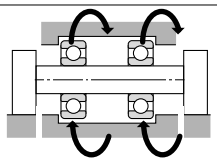 Inner ring: Stationary; Outer ring: Rotating	Static outer ring load	Outer ring : Loose fit
Static load	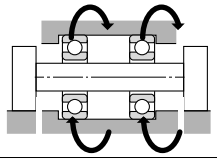 Inner ring: Stationary; Outer ring: Rotating	Static inner ring load	Inner ring : Loose fit
Unbalanced load 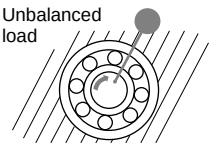	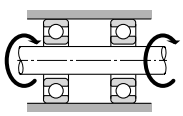 Inner ring: Rotating; Outer ring: Stationary	Rotating outer ring load	Outer ring : Tight fit

7.3.2 Recommended Fits

Bearing fit is governed by the selection tolerances for bearing shaft diameters and housing bore diameters.

Widely used fits for 0 Class tolerance bearings and various shaft and housing bore diameter tolerances are shown in **Table 7.1**.

Generally-used, standard fits for most types of bearings and operating conditions are shown in **Tables 7.2** - **7.7**.

Table 7.2: Fits for radial bearings
Table 7.3: Fits for thrust bearings
Table 7.4: Fits for electric motor bearings
Table 7.6: Fits for inch series tapered roller bearings (ANSI Class 4)
Table 7.7: Fits for inch series tapered roller bearings (ANSI Class 3 and 0)
Table 7.5. shows fits and their numerical values.

For special fits or applications, please consult NTN Engineering.

7.3.3 Interference minimum and maximum values

The following points should be considered when it is necessary to calculate the interference for an application:

- In calculating the minimum required amount of interference keep in mind that:
  1) interference is reduced by radial loads
  2) interference is reduced by differences between bearing temperature and ambient temperature
  3) interference is reduced by variation of fitting surfaces
- The upper limit value should not exceed 1/1000 of the shaft diameter.

Required interference calculations are shown below.

(1) Radial loads and required interference

Interference of the inner ring and shaft decreases when a radial load is applied to the bearing. The interference required to secure effective interference is expressed by formulae (7.1) and (7.2).

$F_r \leqq 0.3\ C_{or}$

$\Delta_{dF} = 0.08\ (d \cdot F_r / B)^{1/2}$ N
$= 0.25\ (d \cdot F_r / B)^{1/2}$ {kgf} ·····(7.1)

$F_r > 0.3\ C_{or}$

$\Delta_{dF} = 0.02\ (F_r / B)$ N
$= 0.2\ (F_r / B)$ {kgf} ·····(7.2)

Where,

Δ_{dF} : Required effective interference according to radial load μm
d : Bearing bore diameter mm
B : Inner ring width mm
F_r : Radial load N {kgf}
C_{or} : Basic static load rating N {kgf}

(2) Temperature difference and required interference

Interference between inner rings and steel shafts is reduced as a result of temperature increases (difference between bearing temperature and ambient temperature, ΔT) caused by bearing rotation. Calculation of the minimum required amount of interference in such cases is shown in formula (7.3).

$\Delta_{dT} = 0.0015 \cdot d \cdot \Delta T$ ·····(7.3)

Δ_{dT} : Required effective interference for temperature difference μm
ΔT : Difference between bearing temperature and ambient temperature ˚C
d : Bearing bore diameter mm

(3) Fitting surface variation and required interference

Interference decreases because the fitting surface is smoothened by fitting (surface roughness is reduced). The amount the interference decreases depends on roughness of the fitting surface. It is generally necessary to anticipate the following decrease in interference.

For ground shafts: 1.0〜2.5 μm
For lathed shafts: 5.0〜7.0 μm

(4) Maximum interference

When bearing rings are installed with an interference fit, tension or compression stress may occur along their raceways. If interference is too great, this may cause damage to the rings and reduce bearing life. You should try to obtain the previously described upper limit.

7.3.4 Other details

(1) Tight interference fits are recommended for,
- Operating conditions with large vibration or shock loads
- Applications using hollow shafts or housings with thin walls
- Applications using housings made of light alloys or plastic

(2) Small interference fits are preferable for,
- Applications requiring high running accuracy
- Applications using small sized bearings or thin walled bearings

(3) Consideration must also be given to the fact that fit selection will effect internal bearing clearance selection. (refer to page insert A-58)

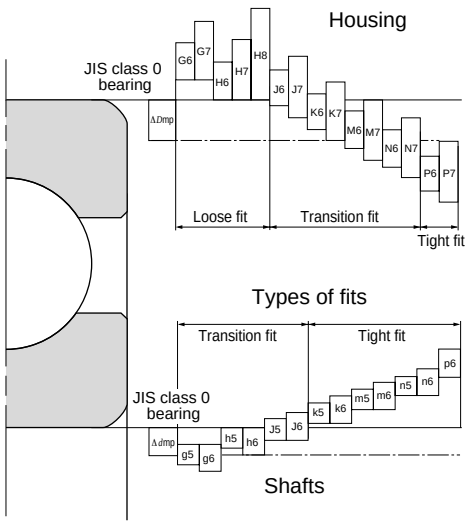

Fig 7.1 State of fitting

(4) A particular type of fit is recommended for SL type cylindrical roller bearings.(See page C-44.)

Table 7.2 General standards for radial bearing fits (JIS Class 0, 6X, 6)

Table 7.2 (1) Tolerance class of shafts commonly used for radial bearings (classes 0, 6X and 6)

Conditions		Ball bearings		Cylindrical roller bearing Tapered roller bearing		Spherical roller bearing		Shaft tolerance class	Remarks
		Shaft diameter (mm)							
		Over	Under	Over	Under	Over	Under		
Cylindrical bore bearing (Classes 0, 6X and 6)									
Inner ring rotational load or load of undetermined direction	Light load ❶ or fluctuating load	— 18 100 —	18 100 200 —	— — 40 140	— 40 140 200	— — — —	— — — —	h5 js6 k6 m6	When greater accuracy is required js5, k5, and m5 may be substituted for js6, k6, and m6.
	Ordinary ❶ load	— 18 100 140 200 — —	18 100 140 200 280 — —	— — 40 100 140 200 —	— 40 100 140 200 400 —	— — 40 65 100 140 280	— 40 65 100 140 280 500	js5 k5 m5 m6 n6 p6 r6	Alteration of inner clearances to accommodate fit is not a consideration with single-row angular contact bearings and tapered roller bearings. Therefore, k5 and m5 may be substituted for k6 and m6.
	Heavy load ❶ or impact load	— — —	— — —	50 140 200	140 200 —	50 100 140	100 140 200	n6 p6 r6	Use bearings with larger internal clearances than CN clearance bearings.
Inner ring static load	Inner ring must move easily over shaft	Overall shaft diameter						g6	When greater accuracy is required use g5. For large bearings, f6 will suffice for to facilitate movement.
	Inner does not have to move easily over shaft	Overall shaft diameter						h6	When greater accuracy is required use h5.
Center axial load		Overall shaft diameter						js6	Generally, shaft and inner rings are not fixed using interferance.
Tapered bore bearing (class 0) (with adapter or withdrawal sleeve)									
Overall load		Overall shaft diameter						h9/IT5 ❷	h10/IT7 ❷ will suffice for power transmitting shafts.

Table 7.2 (2) Fit with shaft (fits for tapered bore bearings (Class 0) with adapter assembly/withdrawal sleeve)

All loads	All bearing types	All shaft diameters	Tolerance class	h9 / IT5 ❷	General applications
				h10/ IT7 ❷	Transmission shafts, etc.

❶ Standards for light loads, normal loads, and heavy loads
- Light loads: equivalent radial load ≦ 0.06 C_r
- Normal loads: 0.06 C_r < equivalent radial load ≦ 0.12 C_r
- Heavy loads: 0.12 C_r < equivalent radial load

❷ IT5 and IT7 show shaft roundness tolerances, cylindricity tolerances, and related values.

Note: All values and fits listed in the above tables are for solid steel shafts.

Table 7.2 (3) Tolerance class of housing bore commonly used for radial bearings (classes 0, 6X and 6)

Conditions				Toleration class of housing bore	Remarks
Housing	Types of load		Outer ring axial ❷ direction movement		
Single housing or divided housing	Outer ring static load	All types of loads	Able to move.	H7	G7 will suffice for large bearings or bearings with large temperature differential between the outer ring and housing.
		Light load ❶ or ordinary load ❶	Able to move.	H8	——
		Shaft and inner ring become hot.	Able to move easily.	G7	F7 will suffice for large bearings or bearings with large temperature differential between the outer ring and housing.
Single housing		Requires precision rotation with light or ordinary loads.	As a rule, cannot move.	K6	Primarily applies to roller bearings.
			Able to move.	JS6	Primarily applies to ball bearings.
		Requires quiet operation.	Able to move.	H6	——
	Indeterminate load	Light or ordinary load	Able to move.	JS7	If precision is required, JS6 and K6 are used in place of JS7 and K7.
		Ordinary load or heavy load ❶	As a rule, cannot move.	K7	
		Large impact load	Cannot move.	M7	——
	Outer ring rotational load	Light or fluctuating load	Cannot move.	M7	——
		Ordinary or heavy load	Cannot move.	N7	Primarily applies to ball bearings.
		Heavy load or large impact load with thin housing	Cannot move.	P7	Primarily applies to roller bearings.

❶ Standards for light loads, normal loads, and heavy loads

Light loads: equivalent radial load $\leqq 0.06\ C_r$
Normal loads: $0.06\ C_r <$ equivalent radial load $\leqq 0.12\ C_r$
Heavy loads: $0.12\ C_r <$ equivalent radial load

❷ Indicates whether or not outer ring axial displacement is possible with non-separable type bearings.

Note 1: All values and fits listed in the above tables are for cast iron or steel housings.
2: If only center axial load is applied to the bearing, select a tolerance class that provides clearance for the outer ring in the axial direction.

Table 7.3 Standard fits for thrust bearings (JIS Class 0 and 6)

Table 7.3 (1) Shaft fits

Bearing type	Load conditions		Fit	Shaft diameter mm over	incl.	Tolerance class
All thrust bearings	Centered axial load only		Transition fit	All sizes		js6 or h6
Spherical roller thrust bearings	Combined load	Inner ring static load	Transition fit	All sizes		js6
		Inner ring rotating load or Indeterminate load	Transition fit	—	200	k6 or js6
				200	400	m6 or k6
			Tight fit	400		n6 or m6

Table 7.3 (2) Housing fits

Bearing type	Load conditions		Fit	Tolerance class	Remarks
All thrust bearings	Centered axial load only		Loose fit	Select a tolerance class that will provide clearance between outer ring and housing.	
				H8	Greater accuracy required with thrust ball bearings
Spherical roller thrust bearings	Combined load	Outer ring static load		H7	—
		Indeterminate load or outer ring rotating load	Transition fit	K7	Normal operating conditions
				M7	For relatively large radial loads

Note: All values and fits listed in the above tables are for cast iron or steel housings.

Table 7.4 Fits for electric motor bearings

Bearing type	Shaft fits			Housing fits	
	Shaft diameter mm over	incl.	Tolerance class	Housing bore diameter	Tolerance class
Deep groove ball bearings	—	18	j5	All sizes	H6 or J6
	18	100	k5		
	100	160	m5		
Cylindrical roller bearings	—	40	k5	All sizes	H6 or J6
	40	160	m5		
	160	200	n6		

Table 7.5 Numeric value table of fitting for radial bearing of 0 class

Table 7.5 (1) Fitting against shaft

Nominal bore diameter of bearing d mm		Mean bore diameter deviation ❶ Δ_{dmp}		g5	g6	h5	h6	j5	js5	j6
				bearing shaft	bearing shaft	bearing shaft	bearing shaft	bearing shaft	bearing shaft	bearing shaft
over	incl.	high	low	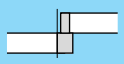	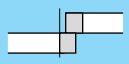	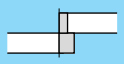	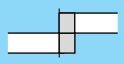	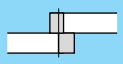	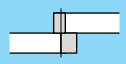	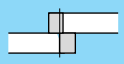
3	6	0	-8	4T～ 9L	4T～12L	8T～ 5L	8T～ 8L	11T～ 2L	10.5T～ 2.5L	14T～ 2L
6	10	0	-8	3T～11L	3T～14L	8T～ 6L	8T～ 9L	12T～ 2L	11T ～ 3L	15T～ 2L
10	18	0	-8	2T～14L	2T～17L	8T～ 8L	8T～11L	13T～ 3L	12T ～ 4L	16T～ 3L
18	30	0	-10	3T～16L	3T～20L	10T～ 9L	10T～13L	15T～ 4L	14.5T～ 4.5L	19T～ 4L
30	50	0	-12	3T～20L	3T～25L	12T～11L	12T～16L	18T～ 5L	17.5T～ 5.5L	23T～ 5L
50	80	0	-15	5T～23L	5T～29L	15T～13L	15T～19L	21T～ 7L	21.5T～ 6.5L	27T～ 7L
80	120	0	-20	8T～27L	8T～34L	20T～15L	20T～22L	26T～ 9L	27.5T～ 7.5L	33T～ 9L
120	140	0	-25	11T～32L	11T～39L	25T～18L	25T～25L	32T～11L	34T ～ 9L	39T～11L
140	160									
160	180									
180	200	0	-30	15T～35L	15T～44L	30T～20L	30T～29L	37T～13L	40T ～10L	46T～13L
200	225									
225	250									
250	280	0	-35	18T～40L	18T～49L	35T～23L	35T～32L	42T～16L	46.5T～11.5L	51T～16L
280	315									
315	355	0	-40	22T～43L	22T～54L	40T～25L	40T～36L	47T～18L	52.5T～12.5L	58T～18L
355	400									
400	450	0	-45	25T～47L	25T～60L	45T～27L	45T～40L	52T～20L	58.5T～13.5L	65T～20L
450	500									

❶ Above table is not applicable to tapered roller bearings whose bore diameter d is 30mm or less.

Table 7.5 (2) Fitting against housing

Nominal outside diameter of bearing D mm		Mean outside diameter deviation ❷ Δ_{Dmp}		G7	H6	H7	J6	J7	Js7	K6
				housing bearing	housing bearing	housing bearing	housing bearing	housing bearing	housing bearing	housing bearing
over	incl.	high	low	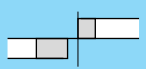	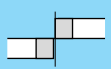	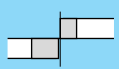	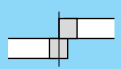	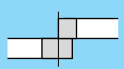	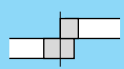	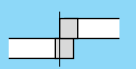
6	10	0	-8	5L～ 28L	0～17L	0～ 23L	4T～13L	7T～16L	7.5T～15.5L	7T～10L
10	18	0	-8	6L～ 32L	0～19L	0～ 26L	5T～14L	8T～18L	9T ～17L	9T～10L
18	30	0	-9	7L～ 37L	0～22L	0～ 30L	5T～17L	9T～21L	10.5T～19.5L	11T～11L
30	50	0	-11	9L～ 45L	0～27L	0～ 36L	6T～21L	11T～25L	12.5T～23.5L	13T～14L
50	80	0	-13	10L～ 53L	0～32L	0～ 43L	6T～26L	12T～31L	15T ～28L	15T～17L
80	120	0	-15	12L～ 62L	0～37L	0～ 50L	6T～31L	13T～37L	17.5T～32.5L	18T～19L
120	150	0	-18	14L～ 72L	0～43L	0～ 58L	7T～36L	14T～44L	20T ～38L	21T～22L
150	180	0	-25	14L～ 79L	0～50L	0～ 65L	7T～43L	14T～51L	20T ～45L	21T～29L
180	250	0	-30	15L～ 91L	0～59L	0～ 76L	7T～52L	16T～60L	23T ～53L	24T～35L
250	315	0	-35	17L～104L	0～67L	0～ 87L	7T～60L	16T～71L	26T ～61L	27T～40L
315	400	0	-40	18L～115L	0～76L	0～ 97L	7T～69L	18T～79L	28.5T～68.5L	29T～47L
400	500	0	-45	20L～128L	0～85L	0～108L	7T～78L	20T～88L	31.5T～76.5L	32T～53L

❷ Above table is not applicable to tapered roller bearings whose outside diameter D is 150mm or less.
Note: Fitting symbol "L" indicates clearance and "T" indicates interference.

Unit μm

js6		k5		k6		m5		m6		n6		p6		r6		Nominal bore diameter of bearing d mm	
bearing	shaft	bearing	shaft	bearing	shaft	bearing	shaft	bearing	shaft	bearing	shaft	bearing	shaft	bearing	shaft	over	incl.
12T ～ 4L		14T～1T		17T～1T		17T～ 4T		20T～ 4T		24T～ 8T		28T～12T		–	–	3	6
12.5T～ 4.5L		15T～1T		18T～1T		20T～ 6T		23T～ 6T		27T～10T		32T～15T		–	–	6	10
13.5T～ 5.5L		17T～1T		20T～1T		23T～ 7T		26T～ 7T		31T～12T		37T～18T		–	–	10	18
16.5T～ 6.5L		21T～2T		25T～2T		27T～ 8T		31T～ 8T		38T～15T		45T～22T		–	–	18	30
20T ～ 8L		25T～2T		30T～2T		32T～ 9T		37T～ 9T		45T～17T		54T～26T		–	–	30	50
24.5T～ 9.5L		30T～2T		36T～2T		39T～11T		45T～11T		54T～20T		66T～32T		–	–	50	80
31T ～11L		38T～3T		45T～2T		48T～13T		55T～13T		65T～23T		79T～37T		–	–	80	120
37.5T～12.5L		46T～3T		53T～3T		58T～15T		65T～15T		77T～27T		93T～43T		113T～ 63T 115T～ 65T 118T～ 68T		120 140 160	140 160 180
44.5T～14.5L		54T～4T		63T～4T		67T～17T		76T～17T		90T～31T		109T～50T		136T～ 77T 139T～ 80T 143T～ 84T		180 200 225	200 225 250
51T ～16L		62T～4T		71T～4T		78T～20T		87T～20T		101T～34T		123T～56T		161T～ 94T 165T～ 98T		250 280	280 315
58T ～18L		69T～4T		80T～4T		86T～21T		97T～21T		113T～37T		138T～62T		184T～108T 190T～114T		315 355	355 400
65T ～20L		77T～5T		90T～4T		95T～23T		108T～23T		125T～40T		153T～68T		211T～126T 217T～132T		400 450	450 500

Unit μm

K7		M7		N7		P7		Nominal outside diameter of bearing D mm	
housing	bearing	housing	bearing	housing	bearing	housing	bearing	over	incl.
10T～13L		15T～ 8L		19T～ 4L		24T～ 1T		6	10
12T～14L		18T～ 8L		23T～ 3L		29T～ 3T		10	18
15T～15L		21T～ 9L		28T～ 2L		35T～ 5T		18	30
18T～18L		25T～11L		33T～ 3L		42T～ 6T		30	50
21T～22L		30T～13L		39T～ 4L		51T～ 8T		50	80
25T～25L		35T～15L		45T～ 5L		59T～ 9T		80	120
28T～30L		40T～18L		52T～ 6L		68T～10T		120	150
28T～37L		40T～25L		52T～13L		68T～ 3T		150	180
33T～43L		46T～30L		60T～16L		79T～ 3T		180	250
36T～51L		52T～35L		66T～21L		88T～ 1T		250	315
40T～57L		57T～40L		73T～24L		98T～ 1T		315	400
45T～63L		63T～45L		80T～28L		108T～ 0		400	500

Table 7.6 General fitting standards for tapered roller bearings using US customary unit (ANSI class 4)

Table 7.6 (1) Fit with shaft

Unit μm

Operating conditions		Nominal bearing bore diameter d mm over	incl.	Bore diameter tolerance Δ_{ds} high	low	Shaft diameter tolerance high	low	Fitting ❶ max	min	Remark
Inner ring rotational load	Ordinary load		~ 76.2	+13	0	+ 38	+ 25	38T ~	12T	Applicable when slight impact load is applied as well.
		76.2 ~	304.8	+25	0	+ 64	+ 38	64T ~	13T	
		304.8 ~	609.6	+51	0	+127	+ 76	127T ~	25T	
		609.6 ~	914.4	+76	0	+190	+114	190T ~	38T	
	Heavy load Impact load		~ 76.2	+13	0	+ 64	+ 38	38T ~	12T	
		76.2 ~	304.8	+25	0	0.5 μm mean interference per 1 mm of inner ring bore diameter. Minimum interference is 25 μm. Tolerance for the shaft is adjusted to match tolerance of bearing bore diameter.				
		304.8 ~	609.6	+51	0					
		609.6 ~	914.4	+76	0					
Outer ring rotational load	Inner ring does not have to move easily over shaft with ordinary load.		~ 76.2	+13	0	+ 13	0	13T ~	13L	Not applicable when impact load is applied.
		76.2 ~	304.8	+25	0	+ 25	0	25T ~	25L	
		304.8 ~	609.6	+51	0	+ 51	0	51T ~	51L	
		609.6 ~	914.4	+76	0	+ 76	0	76T ~	76L	
	Inner ring must move easily over shaft with ordinary load.		~ 76.2	+13	0	0	- 13	0 ~	13L	
		76.2 ~	304.8	+25	0	0	- 25	0 ~	50L	
		304.8 ~	609.6	+51	0	0	- 51	0 ~	102L	
		609.6 ~	914.4	+76	0	0	- 76	0 ~	152L	

Table 7.6 (2) Fit with housing

Unit μm

Operating conditions		Nominal bearing outer diameter D mm over	incl.	Outer diameter tolerance Δ_{Ds} high	low	Housing bore diameter tolerance high	low	Fitting ❶ max	min	Types of fit
Inner ring rotational load	When used on floating- or fixed side		~ 76.2	+25	0	+ 76	+ 51	26L ~	76L	loose fit
		76.2 ~	127.0	+25	0	+ 76	+ 51	26L ~	76L	
		127.0 ~	304.8	+25	0	+ 76	+ 51	26L ~	76L	
		304.8 ~	609.6	+51	0	+152	+102	51L ~	152L	
		609.6 ~	914.4	+76	0	+229	+152	76L ~	229L	
	When outer ring is adjusted in axial direction		~ 76.2	+25	0	+ 25	0	25T ~	25L	transition fit
		76.2 ~	127.0	+25	0	+ 25	0	25T ~	25L	
		127.0 ~	304.8	+25	0	+ 51	0	25T ~	51L	
		304.8 ~	609.6	+51	0	+ 76	+ 26	25T ~	76L	
		609.6 ~	914.4	+76	0	+127	+ 51	25T ~	127L	
	When outer ring is not adjusted in axial direction		~ 76.2	+25	0	- 13	- 38	63T ~	13T	tight fit
		76.2 ~	127.0	+25	0	- 25	- 51	76T ~	25T	
		127.0 ~	304.8	+25	0	- 25	- 51	76T ~	25T	
		304.8 ~	609.6	+51	0	- 25	- 76	127T ~	25T	
		609.6 ~	914.4	+76	0	- 25	-102	178T ~	25T	
Outer ring rotational load	When outer ring is not adjusted in axial direction		~ 76.2	+25	0	- 13	- 38	63T ~	13T	
		76.2 ~	127.0	+25	0	- 25	- 51	76T ~	25T	
		127.0 ~	304.8	+25	0	- 25	- 51	76T ~	25T	
		304.8 ~	609.6	+51	0	- 25	- 76	127T ~	25T	
		609.6 ~	914.4	+76	0	- 25	-102	178T ~	25T	

❶ Fitting symbol "L" indicates clearance and "T" indicates interference.

Table 7.7 General fitting standards for tapered roller bearings using US customary unit (ANSI classes 3 and 0)

Table 7. (1) Fit with shaft

Unit μm

Operating conditions		Nominal bearing bore diameter d mm over		incl.	Bore diameter tolerance Δ_{ds} high	low	Shaft diameter tolerance high	low	Fitting ❶ max		min
Inner ring rotational load	Precision machine tool spindles		~	304.8	+13	0	+ 30	+ 18	30T	~	5T
		304.8	~	609.6	+25	0	+ 64	+ 38	64T	~	13T
		609.6	~	914.4	+38	0	+102	+ 64	102T	~	26T
	Heavy load Impact load High-speed rotation		~	76.2	+13	0	Minimum interference is 0.25 μm per inner ring bore diameter.				
		76.2	~	304.8	+13	0					
		304.8	~	609.6	+25	0					
		609.6	~	914.4	+38	0					
Outer ring rotational load	Precision machine tool spindles		~	304.8	+13	0	+ 13	0	30T	~	5T
		304.8	~	609.6	+25	0	+ 25	0	64T	~	13T
		609.6	~	914.4	+38	0	+102	0	102T	~	26T

Note: For class 0, bearing bore diameter d applies to 241.3 mm or less.

Table 7.7 (2) Fit with housing

Unit μm

Operating conditions		Nominal bearing outer diameter D mm over		incl.	Outer diameter tolerance Δ_{Ds} high	low	Housing bore diameter tolerance high	low	Fitting ❶ max		min	Type of fit
Inner ring rotational load	When used for floating-side		~	152.4	+13	0	+ 38	+ 25	12L	~	38L	loose fit
		152.4	~	304.8	+13	0	+ 38	+ 25	12L	~	38L	
		304.8	~	609.6	+25	0	+ 64	+ 38	13L	~	64L	
		609.6	~	914.4	+38	0	+ 89	+ 51	13L	~	89L	
	When used for fixed side		~	152.4	+13	0	+ 25	+ 13	0	~	25L	
		152.4	~	304.8	+13	0	+ 25	+ 13	0	~	25L	
		304.8	~	609.6	+25	0	+ 51	+ 25	0	~	51L	
		609.6	~	914.4	+38	0	+ 76	+ 38	0	~	76L	
	When outer ring is adjusted in axial direction		~	152.4	+13	0	+ 13	0	13T	~	13L	transition fit
		152.4	~	304.8	+13	0	+ 13	0	13T	~	13L	
		304.8	~	609.6	+13	0	+ 25	0	25T	~	25L	
		609.6	~	914.4	+38	0	+ 38	0	38T	~	38L	
	When outer ring is not adjusted in axial direction		~	152.4	+13	0	0	- 13	26T	~	0	tight fit
		152.4	~	304.8	+13	0	0	- 25	38T	~	0	
		304.8	~	609.6	+25	0	0	- 25	50T	~	0	
		609.6	~	914.4	+38	0	0	- 38	76T	~	0	
Outer ring rotational load	Ordinary load When outer ring is not adjusted in axial direction		~	152.4	+13	0	- 13	- 25	38T	~	13T	
		152.4	~	304.8	+13	0	- 13	- 38	51T	~	13T	
		304.8	~	609.6	+25	0	- 13	- 38	63T	~	13T	
		609.6	~	914.4	+38	0	- 13	- 51	89T	~	13T	

❶ Fitting symbol "L" indicates clearance and "T" indicates interference.
Note: For class 0, bearing outer diameter D applies to 304.8 mm or less.

8. Bearing Internal Clearance and Preload

8.1 Bearing internal clearance

Bearing internal clearance is the amount of internal free movement before mounting.

As shown in **Fig. 8.1**, when either the inner ring or the outer ring is fixed and the other ring is free to move, displacement can take place in either an axial or radial direction. This amount of displacement (radially or axially) is termed the internal clearance and, depending on the direction, is called the radial internal clearance or the axial internal clearance.

When the internal clearance of a bearing is measured, a slight measurement load is applied to the raceway so the internal clearance may be measured accurately. However, at this time, a slight amount of elastic deformation of the bearing occurs under the measurement load, and the clearance measurement value (measured clearance) is slightly larger than the true clearance. This difference between the true bearing clearance and the increased amount due to the elastic deformation must be compensated for. These compensation values are given in **Table 8.1**. For roller bearings the amount of elastic deformation can be ignored.

The internal clearance values for each bearing class are shown in **Tables 8.3** through **8.11**.

8.2 Internal clearance selection

The internal clearance of a bearing under operating conditions (effective clearance) is usually smaller than the same bearing's initial clearance before being installed and operated. This is due to several factors including bearing fit, the difference in temperature between the inner and outer rings, etc. As a bearing's operating clearance has an effect on bearing life, heat generation, vibration, noise, etc.; care must be taken in selecting the most suitable operating clearance.

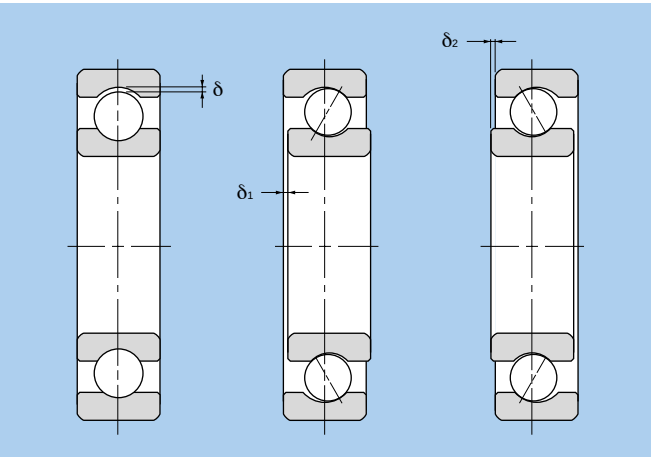

Radial clearance = δ Axial clearance = $\delta_1 + \delta_2$

Fig. 8.1 Internal clearance

8.2.1 Criteria for selecting bearing internal clearance

A bearing's life is theoretically maximum when operating clearance is slightly negative at steady operation. In reality it is however difficult to constantly maintain this optimal condition. If the negative clearance becomes enlarged by fluctuating operating conditions, heat will be produced and life will decrease dramatically. Under ordinary circumstances you should therefore select an initial internal clearance where the operating clearance is slightly larger than zero.

For ordinary operating conditions, use fitting for ordinary loads. If rotational speed and operating temperature are ordinary, selecting normal clearance enables you to obtain the proper operating clearance. **Table 8.2** gives examples applying internal clearances other than CN (normal) clearance.

8.2.2 Calculation of operating clearance

Operating clearance of a bearing can be calculated from initial bearing internal clearance and decrease in internal clearance due to interference and decrease in internal clearance due to difference in temperature of the inner and outer rings.

$$\delta_{eff} = \delta_o - (\delta_f + \delta_t) \quad \cdots\cdots\cdots\cdots\cdots\cdots \quad (8.1)$$

where,

δ_{eff} : Effective internal clearance, mm
δ_o : Bearing internal clearance, mm
δ_f : Reduced amount of clearance due to

Table 8.1 Adjustment of radial internal clearance based on measured load (deep groove ball bearing) Unit μm

Nominal Bore Diameter d mm over	incl.	Measuring Load N {kgf}		Internal clearance adjustmer C2	CN	C3	C4	C5
10 ❶	18	24.5	{2.5}	3〜4	4	4	4	4
18	50	49	{5}	4〜5	5	6	6	6
50	200	147	{15}	6〜8	8	9	9	9

❶ This diameter is included in the group.

Table 8.2 Examples of applications where bearing clearances other than CN (normal) clearance are used

Operating conditions	Applications	Selected clearance
With heavy or shock load, clearance is large.	Railway vehicle axles	C3
	Vibration screens	C3, C4
With indeterminate load, both inner and outer rings are tight-fitted.	Railway vehicle traction motors	C4
	Tractors and final speed regulators	C4
Shaft or inner ring is heated.	Paper making machines and driers	C3, C4
	Rolling mill table rollers	C3
Reduction of noise and vibration when rotating.	Micromotors	C2, CM
Adjustment of clearance to minimize shaft runout.	Main spindles of lathes (Double-row cylindrical roller bearings)	C9NA, C0NA
Loose fitting for both inner and outer rings.	Compressor roll neck	C2

interference, mm
δ_t : Reduced amount of clearance due to temperature differential of inner and outer rings, mm

(1) Reduced clearance due to interference

When bearings are installed with interference fits on shafts and in housings, the inner ring will expand and the outer ring will contract; **thus reducing the bearings' internal clearance.** The amount of expansion or contraction varies depending on the shape of the bearing, the shape of the shaft or housing, dimensions of the respective parts, and the type of materials used. The differential can range from approximately **70% to 90% of the effective interference.**

$$\delta_f = (0.70 \sim 0.90)\ \Delta_{deff} \quad \cdots\cdots (8.2)$$

where,
δ_f : Reduced amount of clearance due to interference, mm
Δ_{deff} : Effective interference, mm

(2) Reduced internal clearance due to inner/outer ring temperature difference.

During operation, normally the outer ring will range from 5 to 10˚C cooler than the inner ring or rotating parts. However, if the cooling effect of the housing is large, the shaft is connected to a heat source, or a heated substance is conducted through the hollow shaft; the temperature difference between the two rings can be even greater. **The amount of internal clearance is thus further reduced by the differential expansion of the two rings.**

$$\delta_t = \alpha \cdot \Delta T \cdot D_o \quad \cdots\cdots (8.3)$$

where,
δ_t : Amount of reduced clearance due to heat differential, mm
α : Bearing material expansion coefficient 12.5×10^{-6}/°C
ΔT : Inner/outer ring temperature differential, ℃
D_o : Outer ring raceway diameter, mm

Outer ring raceway diameter, D_o, values can be approximated by using formula (8.4) or (8.5).

For ball bearings and spherical roller bearings,

$$D_o = 0.20\ (d + 4.0D) \quad \cdots\cdots (8.4)$$

For roller bearings (except Spherical roller bearing),

$$D_o = 0.25\ (d + 3.0D) \quad \cdots\cdots (8.5)$$

where,
d : Bearing bore diameter, mm
D : Bearing outside diameter, mm

Table 8.3 Radial internal clearance of deep groove ball bearings

Unit μm

Nominal bore diameter d mm		C2		CN		C3		C4		C5	
over	incl.	min	max	min	max	min	max	min	max	min	max
—	2.5	0	6	4	11	10	20	—	—	—	—
2.5	6	0	7	2	13	8	23	—	—	—	—
6	10	0	7	2	13	8	23	14	29	20	37
10	18	0	9	3	18	11	25	18	33	25	45
18	24	0	10	5	20	13	28	20	36	28	48
24	30	1	11	5	20	13	28	23	41	30	53
30	40	1	11	6	20	15	33	28	46	40	64
40	50	1	11	6	23	18	36	30	51	45	73
50	65	1	15	8	28	23	43	38	61	55	90
65	80	1	15	10	30	25	51	46	71	65	105
80	100	1	18	12	36	30	58	53	84	75	120
100	120	2	20	15	41	36	66	61	97	90	140
120	140	2	23	18	48	41	81	71	114	105	160
140	160	2	23	18	53	46	91	81	130	120	180
160	180	2	25	20	61	53	102	91	147	135	200
180	200	2	30	25	71	63	117	107	163	150	230
200	225	2	35	25	85	75	140	125	195	175	265
225	250	2	40	30	95	85	160	145	225	205	300
250	280	2	45	35	105	90	170	155	245	225	340
280	315	2	55	40	115	100	190	175	270	245	370
315	355	3	60	45	125	110	210	195	300	275	410
355	400	3	70	55	145	130	240	225	340	315	460
400	450	3	80	60	170	150	270	250	380	350	510
450	500	3	90	70	190	170	300	280	420	390	570
500	560	10	100	80	210	190	330	310	470	440	630
560	630	10	110	90	230	210	360	340	520	490	690

Table 8.4 Radial internal clearance of self-aligning ball bearings

Nominal bore diameter d mm		Bearing with cylindrical bore									
		C2		CN		C3		C4		C5	
over	incl.	min	max	min	max	min	max	min	max	min	max
2.5	6	1	8	5	15	10	20	15	25	21	33
6	10	2	9	6	17	12	25	19	33	27	42
10	14	2	10	6	19	13	26	21	35	30	48
14	18	3	12	8	21	15	28	23	37	32	50
18	24	4	14	10	23	17	30	25	39	34	52
24	30	5	16	11	24	19	35	29	46	40	58
30	40	6	18	13	29	23	40	34	53	46	66
40	50	6	19	14	31	25	44	37	57	50	71
50	65	7	21	16	36	30	50	45	69	62	88
65	80	8	24	18	40	35	60	54	83	76	108
80	100	9	27	22	48	42	70	64	96	89	124
100	120	10	31	25	56	50	83	75	114	105	145
120	140	10	38	30	68	60	100	90	135	125	175
140	160	15	44	35	80	70	120	110	161	150	210

Table 8.5 (1) Radial internal clearance for duplex angular contact ball bearings

Unit μm

Nominal bore diameter d mm		C1		C2		CN		C3		C4	
over	incl.	min	max	min	max	min	max	min	max	min	max
—	10	3	8	6	12	8	15	15	22	22	30
10	18	3	8	6	12	8	15	15	24	30	40
18	30	3	10	6	12	10	20	20	32	40	55
30	50	3	10	8	14	14	25	25	40	55	75
50	80	3	11	11	17	17	32	32	50	75	95
80	100	3	13	13	22	22	40	40	60	95	120
100	120	3	15	15	30	30	50	50	75	110	140
120	150	3	16	16	33	35	55	55	80	130	170
150	180	3	18	18	35	35	60	60	90	150	200
180	200	3	20	20	40	40	65	65	100	180	240

Note: The clearance group in the table is applied only to contact angles in the table below.

Contact angle symbol	Nominal contact angle	Applicable clearance group ❷
C	15°	C1, C2
A ❶	30°	C2, CN, C3
B	40°	CN, C3, C4

❶ Not indicated for bearing number.
❷ For information concerning clearance other than applicable clearance, please contact NTN Engineering.

Table 8.5 (2) Radial internal clearance of self-aligning ball bearings

Unit μm

Nominal bore diameter d mm		C2		CN		C3		C4		C5	
over	incl.	min	max	min	max	min	max	min	max	min	max
10 only		0	10	5	15	10	21	16	28	24	36
10	18	1	11	6	16	12	23	19	31	28	40
18	24	1	11	6	16	13	24	21	33	31	43
24	30	1	13	6	19	13	26	21	35	31	45
30	40	2	15	7	22	15	30	24	39	35	50
40	50	2	15	9	24	17	32	28	45	40	57
50	65	0	15	7	24	16	33	28	48	41	61
65	80	1	17	11	31	21	42	34	56	50	74
80	100	3	20	13	36	25	49	40	65	58	67

Table 8.6 Radial internal clearance of bearings for electric motor

Unit μm

Nominal bore diameter d mm		Radial internal clearance CM			
		Deep groove ball bearings		Cylindrical roller bearings	
over	incl.	min	max	min	max
10 (incl.)	18	4	11	—	—
18	24	5	12	—	—
24	30	5	12	15	30
30	40	9	17	15	30
40	50	9	17	20	35
50	65	12	22	25	40
65	80	12	22	30	45
80	100	18	30	35	55
100	120	18	30	35	60
120	140	24	38	40	65
140	160	24	38	50	80
160	180	—	—	60	90
180	200	—	—	65	100

Note 1: Suffix CM is added to bearing numbers.
Example: 6205ZZCM
2: Clearance not interchangeable for cylindrical roller bearings.

Unit μm

Bearing with tapered bore										Nominal bore diameter d mm	
C2		CN		C3		C4		C5			
min	max	min	max	min	max	min	max	min	max	over	incl.
—	—	—	—	—	—	—	—	—	—	2.5	6
—	—	—	—	—	—	—	—	—	—	6	10
—	—	—	—	—	—	—	—	—	—	10	14
—	—	—	—	—	—	—	—	—	—	14	18
7	17	13	26	20	33	28	42	37	55	18	24
9	20	15	28	23	39	33	50	44	62	24	30
12	24	19	35	29	46	40	59	52	72	30	40
14	27	22	39	33	52	45	65	58	79	40	50
18	32	27	47	41	61	56	80	73	99	50	65
23	39	35	57	50	75	69	98	91	123	65	80
29	47	42	68	62	90	84	116	109	144	80	100
35	56	50	81	75	108	100	139	130	170	100	120
40	68	60	98	90	130	120	165	155	205	120	140
45	74	65	110	100	150	140	191	180	240	140	160

Table 8.7 Interchangeable radial internal clearance for cylindrical roller bearing (cylindrical bore)

Unit μm

Nominal bore diameter d mm		C2		CN		C3		C4		C5	
over	incl.	min	max	min	max	min	max	min	max	min	max
—	10	0	25	20	45	35	60	50	75	—	—
10	24	0	25	20	45	35	60	50	75	65	90
24	30	0	25	20	45	35	60	50	75	70	95
30	40	5	30	25	50	45	70	60	85	80	105
40	50	5	35	30	60	50	80	70	100	95	125
50	65	10	40	40	70	60	90	80	110	110	140
65	80	10	45	40	75	65	100	90	125	130	165
80	100	15	50	50	85	75	110	105	140	155	190
100	120	15	55	50	90	85	125	125	165	180	220
120	140	15	60	60	105	100	145	145	190	200	245
140	160	20	70	70	120	115	165	165	215	225	275
160	180	25	75	75	125	120	170	170	220	250	300
180	200	35	90	90	145	140	195	195	250	275	330
200	225	45	105	105	165	160	220	220	280	305	365
225	250	45	110	110	175	170	235	235	300	330	395
250	280	55	125	125	195	190	260	260	330	370	440
280	315	55	130	130	205	200	275	275	350	410	485
315	355	65	145	145	225	225	305	305	385	455	535
355	400	100	190	190	280	280	370	370	460	510	600
400	450	110	210	210	310	310	410	410	510	565	665
450	500	110	220	220	330	330	440	440	550	625	735

Table 8.8 Non-interchangeable radial internal clearance for cylindrical roller bearing

Nominal bore diameter d mm		Bearing with cylindrical bore											
		C1NA		C2NA		NA❶		C3NA		C4NA		C5NA	
over	incl.	min	max	min	max	min	max	min	max	min	max	min	max
—	10	5	10	10	20	20	30	35	45	45	55	—	—
10	18	5	10	10	20	20	30	35	45	45	55	65	75
18	24	5	10	10	20	20	30	35	45	45	55	65	75
24	30	5	10	10	25	25	35	40	50	50	60	70	80
30	40	5	12	12	25	25	40	45	55	55	70	80	95
40	50	5	15	15	30	30	45	50	65	65	80	95	110
50	65	5	15	15	35	35	50	55	75	75	90	110	130
65	80	10	20	20	40	40	60	70	90	90	110	130	150
80	100	10	25	25	45	45	70	80	105	105	125	155	180
100	120	10	25	25	50	50	80	95	120	120	145	180	205
120	140	15	30	30	60	60	90	105	135	135	160	200	230
140	160	15	35	35	65	65	100	115	150	150	180	225	260
160	180	15	35	35	75	75	110	125	165	165	200	250	285
180	200	20	40	40	80	80	120	140	180	180	220	275	315
200	225	20	45	45	90	90	135	155	200	200	240	305	350
225	250	25	50	50	100	100	150	170	215	215	265	330	380
250	280	25	55	55	110	110	165	185	240	240	295	370	420
280	315	30	60	60	120	120	180	205	265	265	325	410	470
315	355	30	65	65	135	135	200	225	295	295	360	455	520
355	400	35	75	75	150	150	225	255	330	330	405	510	585
400	450	45	85	85	170	170	255	285	370	370	455	565	650
450	500	50	95	95	190	190	285	315	410	410	505	625	720

❶ For bearings with normal clearance, only NA is added to bearing numbers. Ex. NU310NA

Table 8.9 Axial internal clearance for double row and duplex tapered roller bearings (metric series)

Nominal bore diameter d mm		Contact angle $\alpha \leqq 27^\circ$ ($e \leqq 0.76$)							
		C2		CN		C3		C4	
over	incl.	min	max	min	max	min	max	min	max
18	24	25	75	75	125	125	170	170	220
24	30	25	75	75	125	145	195	195	245
30	40	25	95	95	165	165	235	210	280
40	50	20	85	85	150	175	240	240	305
50	65	20	85	110	175	195	260	280	350
65	80	20	110	130	220	240	325	325	410
80	100	45	150	150	260	280	390	390	500
100	120	45	175	175	305	350	480	455	585
120	140	45	175	175	305	390	520	500	630
140	160	60	200	200	340	400	540	520	660
160	180	80	220	240	380	440	580	600	740
180	200	100	260	260	420	500	660	660	820
200	225	120	300	300	480	560	740	720	900
225	250	160	360	360	560	620	820	820	1,020
250	280	180	400	400	620	700	920	920	1,140
280	315	200	440	440	680	780	1,020	1,020	1,260
315	355	220	480	500	760	860	1,120	1,120	1,380
355	400	260	560	560	860	980	1,280	1,280	1,580
400	500	300	600	620	920	1,100	1,400	1,440	1,740

Note1: This table applies to bearings contained in the catalog. For information concerning other bearings or bearings using US customary unit, please contact NTN Engineering.

2: The correlation of axial internal clearance (Δ_a) and radial internal clearance (Δ_r) is expressed as $\Delta_r = 0.667 \cdot e \cdot \Delta_a$.

e: Constant (see dimensions table)

3: Bearing series 329X, 330, 322C and 323Cdo not apply to the table.

Unit μm

Bearing with tapered bore												Nominal bore diameter d mm	
C9NA❷		C0NA❷		C1NA		C2NA		NA❶		C3NA			
min	max	min	max	min	max	min	max	min	max	min	max	over	incl.
5	5	7	17	10	20	20	30	35	45	45	55	—	10
5	10	7	17	10	20	20	30	35	45	45	55	10	18
5	10	7	17	10	20	20	30	35	45	45	55	18	24
5	10	10	20	10	25	25	35	40	50	50	60	24	30
5	12	10	20	12	25	25	40	45	55	55	70	30	40
5	15	10	20	15	30	30	45	50	65	65	80	40	50
5	15	10	20	15	35	35	50	55	75	75	90	50	65
10	20	15	30	20	40	40	60	70	90	90	110	65	80
10	25	20	35	25	45	45	70	80	105	105	125	80	100
10	25	20	35	25	50	50	80	95	120	120	145	100	120
15	30	25	40	30	60	60	90	105	135	135	160	120	140
15	35	30	45	35	65	65	100	115	150	150	180	140	160
15	35	30	45	35	75	75	110	125	165	165	200	160	180
20	40	30	50	40	80	80	120	140	180	180	220	180	200
20	45	35	55	45	90	90	135	155	200	200	240	200	225
25	50	40	65	50	100	100	150	170	215	215	265	225	250
25	55	40	65	55	110	110	165	185	240	240	295	250	280
30	60	45	75	60	120	120	180	205	265	265	325	280	315
30	65	45	75	65	135	135	200	225	295	295	360	315	355
35	75	50	90	75	150	150	225	255	330	330	405	355	400
45	85	60	100	85	170	170	255	285	370	370	455	400	450
50	95	70	115	95	190	190	285	315	410	410	505	450	500

❷ C9NA, C0NA and C1NA are applied only to precision bearings of Class 5 and higher.

Unit μm

Contact angle α > 27° (e > 0.76)								Nominal bore diameter d mm	
C2		CN		C3		C4			
min	max	min	max	min	max	min	max	over	incl.
10	30	30	50	50	70	70	90	18	24
10	30	30	50	60	80	80	100	24	30
10	40	40	70	70	100	90	120	30	40
10	40	40	70	80	110	110	140	40	50
10	40	50	80	90	120	130	160	50	65
10	50	60	100	110	150	150	190	65	80
20	70	70	120	130	180	180	230	80	100
20	70	70	120	150	200	210	260	100	120
20	70	70	120	160	210	210	260	120	140
30	100	100	160	180	240	240	300	140	160
—	—	—	—	—	—	—	—	160	180
—	—	—	—	—	—	—	—	180	200
—	—	—	—	—	—	—	—	200	225
—	—	—	—	—	—	—	—	225	250
—	—	—	—	—	—	—	—	250	280
—	—	—	—	—	—	—	—	280	315
—	—	—	—	—	—	—	—	315	355
—	—	—	—	—	—	—	—	355	400
—	—	—	—	—	—	—	—	400	500

Table 8.10 Radial internal clearance of spherical roller bearings

Nominal bore diameter d mm		Bearing with cylindrical bore									
		C2		CN		C3		C4		C5	
over	incl.	min	max	min	max	min	max	min	max	min	max
14	18	10	20	20	35	35	45	45	60	60	75
18	24	10	20	20	35	35	45	45	60	60	75
24	30	15	25	25	40	40	55	55	75	75	95
30	40	15	30	30	45	45	60	60	80	80	100
40	50	20	35	35	55	55	75	75	100	100	125
50	65	20	40	40	65	65	90	90	120	120	150
65	80	30	50	50	80	80	110	110	145	145	180
80	100	35	60	60	100	100	135	135	180	180	225
100	120	40	75	75	120	120	160	160	210	210	260
120	140	50	95	95	145	145	190	190	240	240	300
140	160	60	110	110	170	170	220	220	280	280	350
160	180	65	120	120	180	180	240	240	310	310	390
180	200	70	130	130	200	200	260	260	340	340	430
200	225	80	140	140	220	220	290	290	380	380	470
225	250	90	150	150	240	240	320	320	420	420	520
250	280	100	170	170	260	260	350	350	460	460	570
280	315	110	190	190	280	280	370	370	500	500	630
315	355	120	200	200	310	310	410	410	550	550	690
355	400	130	220	220	340	340	450	450	600	600	750
400	450	140	240	240	370	370	500	500	660	660	820
450	500	140	260	260	410	410	550	550	720	720	900
500	560	150	280	280	440	440	600	600	780	780	1,000
560	630	170	310	310	480	480	650	650	850	850	1,100
630	710	190	350	350	530	530	700	700	920	920	1,190
710	800	210	390	390	580	580	770	770	1,010	1,010	1,300
800	900	230	430	430	650	650	860	860	1,120	1,120	1,440
900	1,000	260	480	480	710	710	930	930	1,220	1,220	1,570
1,000	1,120	290	530	530	780	780	1,020	1,020	1,330	1,330	1,720
1,120	1,250	320	580	580	860	860	1,120	1,120	1,460	1,460	1,870
1,250	1,400	350	640	640	950	950	1,240	1,240	1,620	1,620	2,080

Table 8.11 Axial internal clearance of four points contact ball bearings

Unit μm

Nominal bore diameter d mm		C2		CN		C3		C4	
over	incl.	min	max	min	max	min	max	min	max
17	40	26	66	56	106	96	146	136	186
40	60	36	86	76	126	116	166	156	206
60	80	46	96	86	136	126	176	166	226
80	100	56	106	96	156	136	196	186	246
100	140	66	126	116	176	156	216	206	266
140	180	76	156	136	196	176	236	226	296
180	220	96	176	156	216	196	256	246	316

Unit μm

Bearing with tapered bore										Nominal bore diameter	
C2		CN		C3		C4		C5		d mm	
min	max	min	max	min	max	min	max	min	max	over	incl.
—	—	—	—	—	—	—	—	—	—	14	18
15	25	25	35	35	45	45	60	60	75	18	24
20	30	30	40	40	55	55	75	75	95	24	30
25	35	35	50	50	65	65	85	85	105	30	40
30	45	45	60	60	80	80	100	100	130	40	50
40	55	55	75	75	95	95	120	120	160	50	65
50	70	70	95	95	120	120	150	150	200	65	80
55	80	80	110	110	140	140	180	180	230	80	100
65	100	100	135	135	170	170	220	220	280	100	120
80	120	120	160	160	200	200	260	260	330	120	140
90	130	130	180	180	230	230	300	300	380	140	160
100	140	140	200	200	260	260	340	340	430	160	180
110	160	160	220	220	290	290	370	370	470	180	200
120	180	180	250	250	320	320	410	410	520	200	225
140	200	200	270	270	350	350	450	450	570	225	250
150	220	220	300	300	390	390	490	490	620	250	280
170	240	240	330	330	430	430	540	540	680	280	315
190	270	270	360	360	470	470	590	590	740	315	355
210	300	300	400	400	520	520	650	650	820	355	400
230	330	330	440	440	570	570	720	720	910	400	450
260	370	370	490	490	630	630	790	790	1,000	450	500
290	410	410	540	540	680	680	870	870	1,100	500	560
320	460	460	600	600	760	760	980	980	1,230	560	630
350	510	510	670	670	850	850	1,090	1,090	1,360	630	710
390	570	570	750	750	960	960	1,220	1,220	1,500	710	800
440	640	640	840	840	1,070	1,070	1,370	1,370	1,690	800	900
490	710	710	930	930	1,190	1,190	1,520	1,520	1,860	900	1,000
530	770	770	1,030	1,030	1,300	1,300	1,670	1,670	2,050	1,000	1,120
570	830	830	1,120	1,120	1,420	1,420	1,830	1,830	2,250	1,120	1,250
620	910	910	1,230	1,230	1,560	1,560	2,000	2,000	2,470	1,250	1,400

8.3 Preload

Normally, bearings are used with a slight internal clearance under operating conditions. However, in some applications, bearings are given an initial load; this means that the bearings' internal clearance is negative before operation. This is called "preload" and is commonly applied to angular ball bearings and tapered roller bearings.

8.3.1 Purpose of preload

The following results are obtained by constant elastic compressive force applied to the contact points of rolling elements and raceway by providing preload.

(1) Bearing's rigidity increases, internal clearance tends not to be produced even when heavy load is applied.
(2) The particular frequency of the bearing increases and is becomes suitable for high-speed rotation.
(3) Shaft runout is suppressed; rotation and position precision are enhanced.
(4) Vibration and noise are controlled.
(5) Sliding of rolling elements by turning, spinning, or pivoting, is controlled and smearing is reduced.
(6) Fretting produced by external vibration is prevented.

Applying excessive preload could result in reduction of life, abnormal heating, or increase in turning torque. You should therefore consider the objectives before determining the amount of preload.

Table 8.12 Preloading methods and characteristics

Method	Basic pattern	Applicable bearings	Object	Characteristics	Applications
Fixed position preload	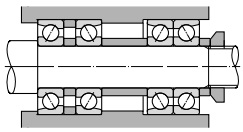	Angular contact ball bearings	Maintaining accuracy of rotating shaft, preventing vibration increasing rigidity	Preloading is accomplished by a predetermined offset of the rings or by using spacers. For the standard preload see **Table 8.13**.	Grinding machines, lathes, milling machines, measuring instruments
	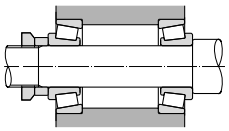	Tapered roller bearings, thrust ball bearings, angular contact ball bearings	Increasing bearing rigidity	Preload is accomplished by adjusting a threaded screw. The amount of preload is set by measuring the starting torque or axial displacement.	Lathes, milling machines, differential gears of automotives, printing machines, wheel axles
Constant pressure preload	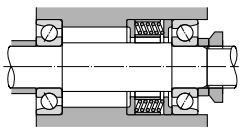	Angular contact ball bearings, deep groove ball bearings, tapered roller bearings (high speed)	Maintaining accuracy and preventing vibration and noise with a constant amount of preload without being affected by loads or temperature	Preloading is accomplished by using coil or belleville springs. for deep groove ball bearings: $4\sim10\ d$ N $0.4\sim1.0\ d$ {kgf} d: Shaft diameter mm for angular contact ball bearings: see Table 8.13.	Internal grinding machines, electric motors, high speed shafts in small machines, tension reels
	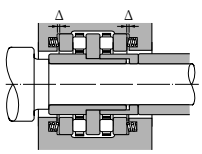	Spherical roller thrust bearings, cylindrical roller thrust bearings, thrust ball bearings	Preload is primarily used to prevent smearing of opposite axial load side when bearing an axial load.	Preload is accomplished by using coil or belleville springs. Recommended preloads are as follows: for thrust ball bearings: $T_1=0.42\ (nC_{oa})^{1.9}\times10^{-13}$ N $=3.275(nC_{oa})^{1.9}\times10^{-13}$ {kgf} $T_2=0.00083\ C_{oa}$ N {kgf} which ever is greater for spherical roller thrust bearings, cylindrical roller thrust bearing $T=0.025\ C_{oa}^{0.8}$ N $=0.0158\ C_{oa}^{0.8}$ {kgf}	Rolling mills, extruding machines

Note: In the above formulas T = preload, N {kgf}
n = number of revolutions, min^{-1}
C_{oa} = basic static axial load rating, N {kgf}

8.3.2 Preloading methods and amounts

The most common method of applying preload on a bearing is change the relative position of the inner and outer rings of the bearing in the axial direction while applying an axial load between bearings on opposing sides. There are two types of preload: fixed position preload and constant pressure preload.

The basic pattern, purpose and characteristics of bearing preloads are shown in **Table 8.12**. The fixed position preload is effective for positioning the two bearings and also for increasing the rigidity. Due to the use of a spring for the constant pressure preload, the preloading amount can be kept constantly, even when the distance between the two bearings fluctuates under the influence of operating heat and load.

Also, the standard preloading amount for the paired angular contact ball bearings is shown in **Table 8.13**. Light and normal preload is applied to prevent general vibration, and medium and heavy preload is applied especially when rigidity is required.

8.3.3 Preload and rigidity

The increased rigidity effect preloading has on bearings is shown in **Fig. 8.2**. When the offset inner rings of the two paired angular contact ball bearings are pressed together, each inner ring is displaced axially by the amount δ_o and is thus given a preload, F_o, in the direction. Under this condition, when external axial load F_a is applied, bearing Ⅰ will have an increased displacement by the amount δ_a and bearing Ⅱ's displacement will decrease. At this time the loads applied to bearing Ⅰ and Ⅱ are $F_{Ⅰ}$ and $F_{Ⅱ}$, respectively.

Under the condition of no preload, bearing Ⅰ will be displaced by the amount δ_b when axial load F_a is applied. Since the amount of displacement, δ_a, is less than δ_b, it indicates a higher rigidity for δ_a.

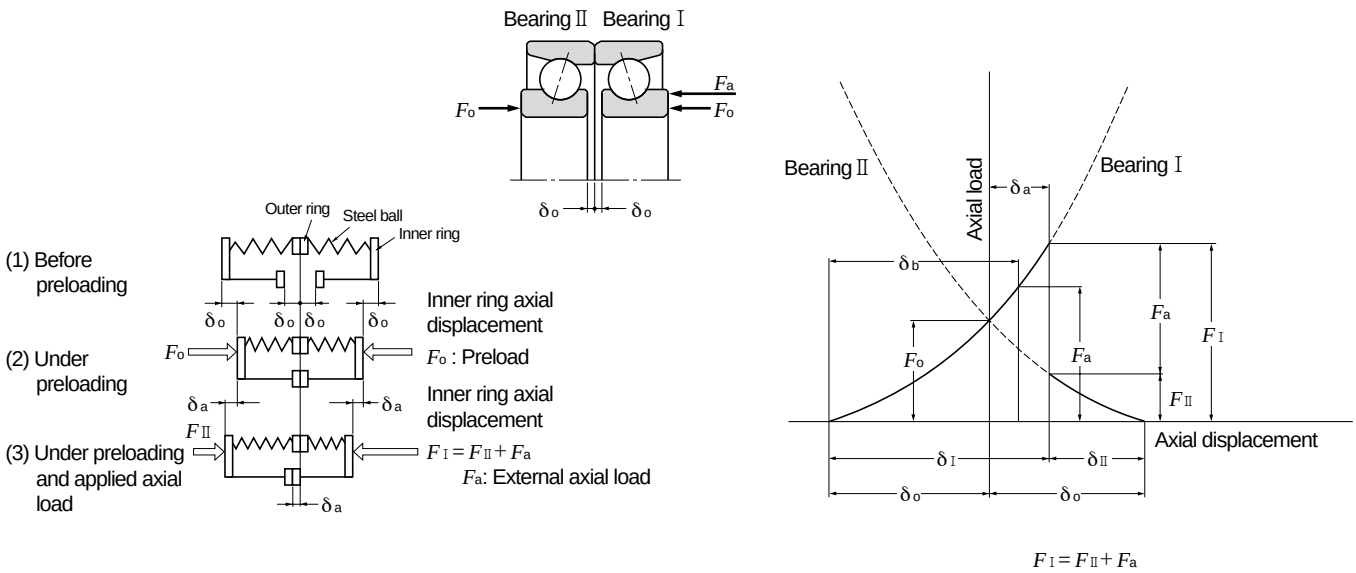

Fig. 8.2 Fixed position preload model diagram and preload diagram

Table 8.13 The normal preload of duplex angular contact ball bearings

Nominal bore diameter *d* mm		Bearing									
		78C				79C, HSB9C				70C, BNT0,	
over	inch	Low GL	Normal GN	Central GM	Heavy GH	Low GL	Normal GN	Central GM	Heavy GH	Low GL	Normal GN
-	12	-	-	-	-	-	-	-	-	20{ 2}	29{ 3}
12	18	-	-	-	-	-	-	-	-	20{ 2}	29{ 3}
18	32	10{ 1}	29{ 3}	78{ 8}	147{ 15}	20{ 2}	49{ 5}	98{ 10}	196{ 20}	29{ 3}	78{ 8}
32	40	10{ 1}	29{ 3}	78{ 8}	147{ 15}	29{ 3}	78{ 8}	196{ 20}	294{ 30}	49{ 5}	147{ 15}
40	50	20{ 2}	49{ 5}	98{ 10}	196{ 20}	39{ 4}	98{ 10}	245{ 25}	490{ 50}	49{ 5}	147{ 15}
50	65	29{ 3}	98{10}	196{ 20}	390{ 40}	49{ 5}	118{ 12}	294{ 30}	590{ 60}	98{10}	196{ 20}
65	80	29{ 3}	98{10}	196{ 20}	390{ 40}	78{ 8}	196{ 20}	390{ 40}	785{ 80}	98{10}	294{ 30}
80	90	49{ 5}	147{15}	294{ 30}	590{ 60}	98{10}	245{ 25}	490{ 50}	980{100}	147{15}	390{ 40}
90	95	49{ 5}	147{15}	294{ 30}	590{ 60}	98{10}	245{ 25}	490{ 50}	980{100}	147{15}	390{ 40}
95	100	49{ 5}	147{15}	294{ 30}	590{ 60}	118{12}	294{ 30}	685{ 70}	1,470{150}	147{15}	390{ 40}
100	105	49{ 5}	147{15}	294{ 30}	590{ 60}	118{12}	294{ 30}	685{ 70}	1,470{150}	196{20}	590{ 60}
105	110	78{ 8}	196{20}	490{ 50}	980{100}	118{12}	294{ 30}	685{ 70}	1,470{150}	196{20}	590{ 60}
110	120	78{ 8}	196{20}	490{ 50}	980{100}	147{15}	390{ 40}	880{ 90}	1,960{200}	196{20}	590{ 60}
120	140	98{10}	294{30}	590{ 60}	1,270{130}	196{20}	490{ 50}	980{100}	2,450{250}	294{30}	785{ 80}
140	150	147{15}	390{40}	785{ 80}	1,470{150}	245{25}	685{ 70}	1,470{150}	2,940{300}	294{30}	785{ 80}
150	160	147{15}	390{40}	785{ 80}	1,470{150}	245{25}	685{ 70}	1,470{150}	2,940{300}	490{50}	980{100}
160	170	147{15}	490{50}	980{100}	1,960{200}	245{25}	685{ 70}	1,470{150}	2,940{300}	490{50}	980{100}
170	180	147{15}	490{50}	980{100}	1,960{200}	294{30}	880{ 90}	1,960{200}	3,900{400}	490{50}	980{100}
180	190	196{20}	590{60}	1,270{130}	2,450{250}	294{30}	880{ 90}	1,960{200}	3,900{400}	590{60}	1,470{150}
190	200	196{20}	590{60}	1,270{130}	2,450{250}	490{50}	1,270{130}	2,940{300}	5,900{600}	590{60}	1,470{150}

Nominal bore diameter *d* mm		Bearing						
		79, HSB9			70, HSB0			
over	inch	Normal GN	Central GM	Heavy GH	Low GL	Normal GN	Central GM	Heavy GH
-	12	39{ 4}	78{ 8}	147{ 15}	29{ 3}	78{ 8}	147{ 15}	196{ 20}
12	18	49{ 5}	147{ 15}	196{ 20}	29{ 3}	78{ 8}	147{ 15}	294{ 30}
18	32	98{ 10}	196{ 20}	294{ 30}	49{ 5}	147{ 15}	294{ 30}	490{ 50}
32	40	147{ 15}	294{ 30}	590{ 60}	78{ 8}	294{ 30}	590{ 60}	880{ 90}
40	50	196{ 20}	390{ 40}	635{ 70}	78{ 8}	294{ 30}	590{ 60}	980{ 100}
50	65	245{ 25}	490{ 50}	785{ 80}	147{15}	490{ 50}	880{ 90}	1,470{ 150}
65	80	390{ 40}	785{ 80}	1,180{120}	147{15}	590{ 60}	1,470{150}	1,960{ 200}
80	90	490{ 50}	980{100}	1,470{150}	196{20}	880{ 90}	1,960{200}	2,940{ 300}
90	95	490{ 50}	980{100}	1,470{150}	196{20}	880{ 90}	1,960{200}	2,940{ 300}
95	100	685{ 70}	1,274{130}	1,960{200}	196{20}	880{ 90}	1,960{200}	2,940{ 300}
100	105	685{ 70}	1,274{130}	1,960{200}	294{30}	980{100}	2,450{250}	3,900{ 400}
105	110	685{ 70}	1,274{130}	1,960{200}	294{30}	980{100}	2,450{250}	3,900{ 400}
110	120	880{ 90}	1,780{180}	2,940{300}	294{30}	980{100}	2,450{250}	3,900{ 400}
120	140	980{100}	1,960{200}	3,450{350}	490{50}	1,470{150}	3,450{350}	5,900{ 600}
140	150	1,270{130}	2,450{250}	4,400{450}	490{50}	1,470{150}	3,450{350}	5,900{ 600}
150	160	1,270{130}	2,450{250}	4,400{450}	685{70}	2,450{250}	4,900{500}	8,800{ 900}
160	170	1,270{130}	2,450{250}	4,400{450}	685{70}	2,450{250}	4,900{500}	8,800{ 900}
170	180	1,780{180}	3,450{350}	5,900{600}	685{70}	2,450{250}	4,900{500}	8,800{ 900}
180	190	1,780{180}	3,450{350}	5,900{600}	880{90}	3,450{350}	6,850{700}	9,800{1,000}
190	200	2,450{250}	4,900{500}	7,850{800}	880{90}	3,450{350}	6,850{700}	9,800{1,000}

Unit N {kgf}

series									
HSB0C		72C, BNT2				73C			
Central GM	Heavy GH	Low GL	Normal GN	Central GM	Heavy GH	Low GL	Normal GN	Central GM	Heavy GH
98{ 10}	147{ 15}	20{ 2}	49{ 5}	98{ 10}	196{ 20}	29{ 3}	78{ 8}	147{ 15}	294{ 30}
98{ 10}	196{ 20}	20{ 2}	49{ 5}	147{ 15}	294{ 30}	29{ 3}	78{ 8}	196{ 20}	390{ 40}
147{ 15}	294{ 30}	49{ 5}	98{ 10}	294{ 30}	490{ 50}	76{ 8}	147{ 15}	390{ 40}	685{ 70}
294{ 30}	590{ 60}	78{ 8}	196{ 20}	490{ 50}	785{ 80}	98{ 10}	294{ 30}	590{ 60}	980{ 100}
294{ 30}	685{ 70}	98{10}	294{ 30}	590{ 60}	980{ 100}	145{ 15}	390{ 40}	980{100}	1,960{ 200}
490{ 50}	980{100}	147{15}	390{ 40}	785{ 80}	1,470{ 150}	196{ 20}	590{ 60}	1,470{150}	2,940{ 300}
685{ 70}	1,470{150}	196{20}	490{ 50}	980{100}	1,960{ 200}	294{ 30}	785{ 80}	1,960{200}	3,900{ 400}
980{100}	1,960{200}	294{30}	685{ 70}	1,470{150}	2,940{ 300}	390{ 40}	980{100}	2,450{250}	4,900{ 500}
980{100}	1,960{200}	294{30}	685{ 70}	1,960{200}	3,900{ 400}	390{ 40}	980{100}	2,950{300}	5,900{ 600}
980{100}	1,960{200}	294{30}	685{ 70}	1,960{200}	3,900{ 400}	390{ 40}	980{100}	2,950{300}	5,900{ 600}
1,470{150}	2,450{250}	390{40}	980{100}	2,450{250}	4,900{ 500}	590{ 60}	1,470{150}	3,450{350}	6,850{ 700}
1,470{150}	2,450{250}	390{40}	980{100}	2,450{250}	4,900{ 500}	590{ 60}	1,470{150}	3,450{350}	6,850{ 700}
1,470{150}	2,450{250}	390{40}	980{100}	2,450{250}	4,900{ 500}	590{ 60}	1,470{150}	3,450{350}	6,850{ 700}
1,960{200}	3,900{400}	490{50}	1,470{150}	2,940{300}	5,900{ 600}	785{ 80}	1,960{200}	4,400{450}	8,800{ 900}
1,960{200}	3,900{400}	490{50}	1,470{150}	2,940{300}	5,900{ 600}	785{ 80}	1,960{200}	4,400{450}	8,800{ 900}
2,450{250}	5,900{600}	685{70}	1,960{200}	4,400{450}	7,850{ 800}	880{ 90}	2,450{250}	5,900{600}	9,800{1,100}
2,450{250}	5,900{600}	685{70}	1,960{200}	4,400{450}	7,850{ 800}	880{ 90}	2,450{250}	5,900{600}	9,800{1,100}
2,450{250}	5,900{600}	685{70}	1,960{200}	4,400{450}	7,850{ 800}	880{ 90}	2,450{250}	5,900{600}	9,800{1,100}
3,450{350}	6,850{700}	785{80}	2,450{250}	4,900{500}	9,800{1,000}	980{100}	2,940{300}	6,850{700}	11,800{1,200}
3,450{350}	6,850{700}	785{80}	2,450{250}	4,900{500}	9,800{1,000}	980{100}	2,940{300}	6,850{700}	11,800{1,200}

Unit N {kgf}

series							
72, 72B				73, 73B			
Low GL	Normal GN	Central GM	Heavy GH	Low GL	Normal GN	Central GM	Heavy GH
29{ 3}	98{ 10}	196{ 20}	294{ 30}	49{ 5}	147{ 15}	294{ 30}	390{ 40}
29{ 3}	98{ 10}	294{ 30}	390{ 40}	49{ 5}	147{ 15}	390{ 40}	490{ 50}
78{ 8}	196{ 20}	490{ 50}	785{ 80}	98{ 10}	294{ 30}	590{ 60}	980{ 100}
98{ 10}	390{ 40}	880{ 90}	1,470{ 150}	147{ 15}	490{ 50}	980{ 100}	1,960{ 200}
147{ 15}	590{ 60}	980{100}	1,960{ 200}	196{ 20}	785{ 80}	1,470{ 150}	2,450{ 250}
196{ 20}	785{ 80}	1,470{150}	2,940{ 300}	294{ 30}	980{100}	2,450{ 250}	3,900{ 400}
294{ 30}	980{100}	2,450{250}	3,900{ 400}	390{ 40}	1,470{150}	3,450{ 350}	4,900{ 500}
490{ 50}	1,470{150}	2,940{300}	4,900{ 500}	590{ 60}	1,960{200}	3,900{ 400}	5,880{ 600}
490{ 50}	1,960{200}	3,900{400}	5,900{ 600}	590{ 60}	2,450{250}	4,900{ 500}	6,854{ 700}
490{ 50}	1,960{200}	3,900{400}	5,900{ 600}	590{ 60}	2,450{250}	4,900{ 500}	6,860{ 700}
590{ 60}	2,450{250}	4,900{500}	7,850{ 800}	685{ 70}	2,940{300}	5,900{ 600}	8,800{ 900}
590{ 60}	2,450{250}	4,900{500}	7,850{ 800}	685{ 70}	2,940{300}	5,900{ 600}	8,800{ 900}
590{ 60}	2,450{250}	4,900{500}	7,850{ 800}	685{ 70}	2,940{300}	5,900{ 600}	8,800{ 900}
785{ 80}	2,940{300}	5,900{600}	9,800{1,000}	880{ 90}	3,900{400}	7,850{ 800}	11,800{1,200}
785{ 80}	2,940{300}	5,900{600}	9,800{1,000}	880{ 90}	3,900{400}	7,850{ 800}	11,800{1,200}
880{ 90}	3,900{400}	7,850{800}	11,800{1,200}	980{100}	4,400{450}	8,800{ 900}	13,700{1,400}
880{ 90}	3,900{400}	7,850{800}	11,800{1,200}	980{100}	4,400{450}	8,800{ 900}	13,700{1,400}
880{ 90}	3,900{400}	7,850{800}	11,800{1,200}	980{100}	4,400{450}	8,800{ 900}	13,700{1,400}
980{100}	4,400{450}	8,800{900}	13,700{1,400}	1,470{150}	5,900{600}	11,800{1,200}	15,700{1,600}
980{100}	4,400{450}	8,800{900}	13,700{1,400}	1,470{150}	5,900{600}	11,800{1,200}	15,700{1,600}

9. Allowable Speed

As rotational speed of the bearing increase, the temperature of the bearing also rises due to heat produced inside the bearing by friction. This causes damage to the bearing such as seizure, and the bearing will be unable to continue stable operation. Therefore, the maximum speed at which it is possible for the bearing to continuously operate without the generation of excessive heat beyond specified limits, is called the **allowable speed** (min^{-1}).

The allowable speed of a bearing depends on the type of bearing, bearing dimensions, type of cage, load, lubricating conditions, and cooling conditions.

The bearing dimensions table gives approximate allowable rotational speeds for grease and oil lubrication. The values are based on the following:

- The bearing must have the proper internal clearance prescribed in the NTN Engineering standard design specifications and must be properly installed.
- A quality lubricant must be used. The lubricant must be replenished and changed when necessary.
- The bearing must be operated at normal operating temperature under ordinary load conditions ($P \leqq 0.09\ C_r$, $F_a / F_a \leqq 0.3$).

If load is $P \leqq 0.04\ C_{or}$, the rolling elements may not turn smoothly. If so, please contact NTN Engineering for more information. Allowable rotational speed for deep groove ball bearings with contact seal (LLU type) or low-torque seal (LLH type) is determined according to the circumferential speed of the seal.

For bearings to be used under heavier than normal load conditions, the allowable speed values listed in the bearing tables must be multiplied by an adjustment factor. The adjustment factors f_L and f_C are given in **Figs. 9.1** and **9.2**.

Also, when radial bearings are mounted on vertical shafts, lubricant retentions and cage guidance are not favorable compared to horizontal shaft mounting.

Therefore, the allowable speed should be reduced to **approximately 80% of the listed speed**.

For speeds other than those mentioned above, and for which data is incomplete, please consult NTN Engineering.

If rotational speed is to exceed allowable rotational speed given in the dimensions table, it will require special considerations such as using a bearing for which cage specifications, internal clearance and precision have been thoroughly checked. It will also require adopting forced circulation, jet oil or mist oil lubrication as the lubrication method.

Under such high speed operating conditions, when special care is taken, the standard allowable speeds given in the bearing tables can be adjusted upward. The maximum speed adjustment values, f_B, by which the bearing table speeds can be multiplied, are shown in **Table 9.1**. However, for any application requiring speeds in excess of the standard allowable speed, please consult NTN Engineering.

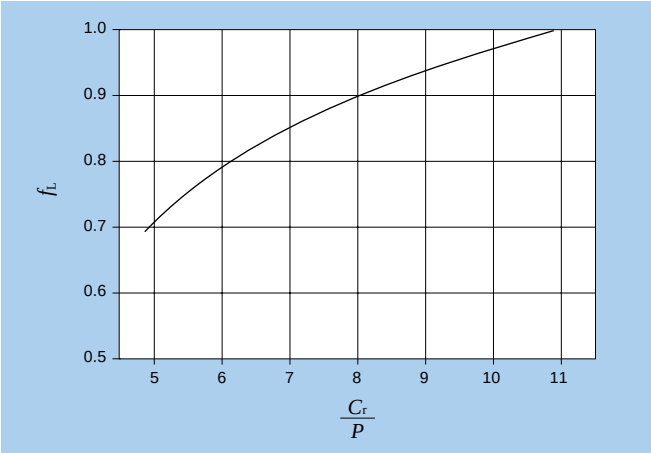

Fig. 9.1 Value of adjustment factor f_L depends on bearing load

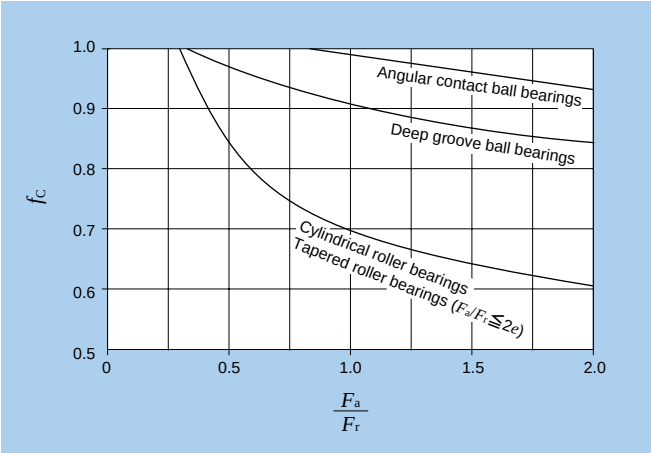

Fig. 9.2 Value of adjustment factor f_C depends on combined load

Table 9.1 Adjustment factor, f_B, for allowable number of revolutions

Type of bearing	Adjustment factor f_B
Deep groove ball bearings	3.0
Angular contact ball bearings	2.0
Cylindrical roller bearings	2.5
Tapered roller bearings	2.0

10. Friction and Temperature Rise

10.1 Friction

One of the main functions required of a bearing is that it must have low friction. Under normal operating conditions rolling bearings have a much smaller friction coefficient than the slide bearings, especially starting friction.

The friction coefficient for rolling bearings is expressed by formula (10.1).

$$\mu = \frac{2M}{Pd} \quad \cdots\cdots (10.1)$$

where,

μ : Friction coefficient
M : Friction moment, N • mm {kgf • fmm}
P : Load, N {kgf}
d : Bearing bore diameter, mm

Although the dynamic friction coefficient for rolling bearings varies with the type of bearings, load, lubrication, speed, and other factors; for normal operating conditions, the approximate friction coefficients for various bearing types are listed in **Table 10.1**.

Table 10.1 Friction coefficient for bearings (reference)

Bearing type	Coefficient $\mu \times 10^{-3}$
Deep groove ball bearings	1.0～1.5
Angular contact ball bearings	1.2～1.8
Self-aligning ball bearings	0.8～1.2
Cylindrical roller bearings	1.0～1.5
Needle roller bearings	2.0～3.0
Tapered roller bearings	1.7～2.5
Spherical roller bearings	2.0～2.5
Thrust ball bearings	1.0～1.5
Thrust roller bearings	2.0～3.0

10.2 Temperature rise

Almost all friction loss in a bearing is transformed into heat within the bearing itself and causes the temperature of the bearing to rise. The amount of thermal generation caused by friction moment can be calculated using formula (10.2).

$$\left.\begin{aligned} Q &= 0.105 \times 10^{-6} M n \quad \text{N} \\ &= 1.03 \times 10^{-6} M n \quad \{\text{kgf}\} \end{aligned}\right\} \quad \cdots\cdots (10.2)$$

where,

Q : Thermal value, kW
M : Friction moment, N • mm {kgf • fmm}
n : Rotational speed, min^{-1}

Bearing operating temperature is determined by the equilibrium or balance between the amount of heat generated by the bearing and the amount of heat conducted away from the bearing. In most cases the temperature rises sharply during initial operation, then increases slowly until it reaches a stable condition and then remains constant. The time it takes to reach this stable state depends on the amount of heat produced, heat capacity/diffusion of the shaft and bearing housing, amount of lubricant and method of lubrication. If the temperature continues to rise and does not become constant, it must be assumed that there is some improper function.

Possible causes of abnormal temperature include bearing misalignment (due to moment load or incorrect installation), insufficient internal clearance, excessive preload, too much or too little lubricant, or heat produced from sealed units. Check the mechanical equipment, and if necessary, remove and inspect the bearing.

11. Lubrication

11.1 Purpose of lubrication

The purpose of bearing lubrication is to prevent direct metallic contact between the various rolling and sliding elements. This is accomplished through the formation of a thin oil (or grease) film on the contact surfaces. However, for rolling bearings, lubrication has the following advantages:

(1) **Reduction of friction and wear**
(2) **Dissipation of friction heat**
(3) **Prolonged bearing life**
(4) **Prevention of rust**
(5) **Protection against harmful elements**

In order to exhibit these effects, a lubrication method that matches service conditions. In addition to this, a quality lubricant must be selected, the proper amount of lubricant must be used and the bearing must be designed to prevent foreign matter from getting in or lubricant from leaking out.

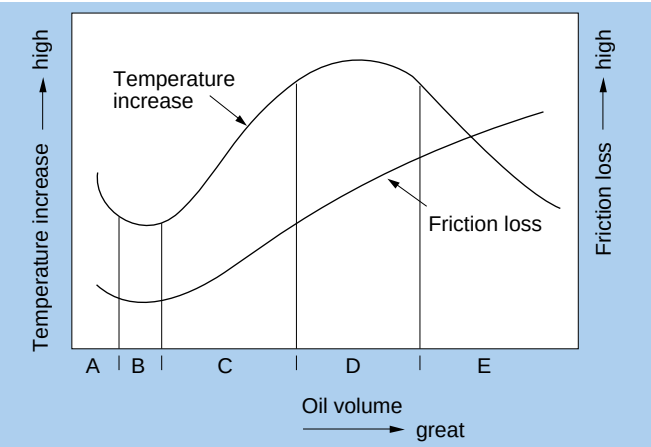

Fig. 11.1

Table 11.1 Oil volume, friction loss, bearing temperature (See Fig. 11.1)

Range	Characteristics	Lubrication method
A	When oil volume is extremely low, direct metallic contact occurs in places between the rolling elements and raceway surfaces. Bearing abrasion and seizing occur.	——
B	A thin oil film develops over all surfaces, friction is minimal and bearing temperature is low.	Grease lubrication, oil mist, air-oil lubrication
C	As oil volume increases, heat buildup is balanced by cooling.	Circulating lubrication
D	Regardless of oil volume, temperature increases at a fixed rate.	Circulating lubrication
E	As oil volume increases, cooling predominates and bearing temperature decreases.	Forced circulation lubrication, Oil jet lubrication

Fig. 11.1 shows the relationship between oil volume, friction loss, and bearing temperature. **Table 11.1** details the characteristics of this relationship.

11.2 Lubrication methods and characteristics

Lubrication method for bearings can be roughly divided into grease and oil lubrication. Each of these has its own features, so the lubrication method that best offers the required function must be selected.
The characteristic are shown in **Table 11.2**.

Table 11.2 Comparison of grease lubrication and oil lubrication characteristics

Concern \ Method	Grease lubrication	Oil lubrication
Handling	◎	△
Reliability	○	◎
Cooling effect	×	○ (Circulation necessary)
Seal structure	○	△
Power loss	○	○
Environment contamination	○	△
High speed rotation	×	○

◎ : Very good ○ : Good △ : Fair × : Poor

11.3 Grease lubrication

Grease lubricants are relatively easy to handle and require only the simplest sealing devices. For these reasons, grease is the most widely used lubricant for rolling bearings. It is used a bearing that is pre-sealed with grease (sealed/shield bearing), or if using an unsealed bearing, fill the bearing and housing with the proper amount of grease, and replenish or change the grease regularly.

11.3.1 Types and characteristics of grease

Lubricating grease are composed of either a mineral oil base or a synthetic oil base. To this base a thickener and other additives are added. The properties of all greases are mainly determined by the kind of base oil used and by the combination of thickening agent and various additives. **Table 11.5** shows general grease varieties and characteristics, and **Table 11.6** shows grease brand names and their natures. (See pages A-74 and A-75.) As performance characteristics of even the same type of grease will vary widely from brand to brand, **it is necessary to check the manufacturers' data when selecting a grease.**

(1) Base oil

Mineral oil or synthetics such as ester or ether oil are used as the base of the grease.

Mainly, the properties of any grease is determined by the properties of the base oil. Generally, greases with low

viscosity base oil are best suited for low temperatures and high speeds; Grease using high-viscosity base oil has superior high-temperature and high-load characteristics.

(2) Thickening agents

Thickening agents are compounded with base oils to maintain the semi-solid state of the grease. Thickening agents consist of two types of bases, metallic soaps and non-soaps. Metallic soap thickeners include: lithium, sodium, calcium, etc.

Non-soap base thickeners are divided into two groups; inorganic (silica gel, bentonite, etc.) and organic (poly-urea, fluorocarbon, etc.).

The various special characteristics of a grease, such as limiting temperature range, mechanical stability, water resistance, etc. depend largely on the type of thickening agent used. For example, a sodium based grease is generally poor in water resistance properties, while greases with bentone, poly-urea and other non-metallic soaps as the thickening agent are generally superior in high temperature properties.

(3) Additives

Various additives are added to greases to improve various properties and efficiency. For example, there are anti-oxidents, high-pressure additives (EP additives), rust preventives, and anti-corrosives.

For bearings subject to heavy loads and/or shock loads, a grease containing high-pressure additives should be used. For comparatively high operating temperatures or in applications where the grease cannot be replenished for long periods, a grease with an oxidation stabilizer is best to use.

(4) Consistency

Consistency is an index that indicates hardness and fluidity of grease. The higher the number, the softer the grease is. The consistency of a grease is determined by the amount of thickening agent used and the viscosity of the base oil. For the lubrication of rolling bearings, greases with the NLGI consistency numbers of 1, 2, and 3 are used.

General relationships between consistency and application of grease are shown in **Table 11.3**.

(5) Mixing of greases

When greases of different kinds are mixed together, the consistency of the greases will change (usually softer), the operating temperature range will be lowered, and other changes in characteristics will occur. As a rule, grease should not be mixed with grease of any other brand.

However, if different greases must be mixed, at least greases with the same base oil and thickening agent should be selected.

Table 11.3 Consistency of grease

NLGI Consis-tency No.	JIS (ASTM) 60 times blend consistency	Applications
0	355～385	For centralized greasing use
1	310～340	For centralized greasing use
2	265～295	For general use and sealed bearing use
3	220～250	For general use and high temperature use
4	175～205	For special use

11.3.2 Amount of grease

The amount of grease used in any given situation will depend on many factors relating to the size and shape of the housing, space limitations, bearing's rotating speed and type of grease used.

As a rule of thumb, bearings should be filled to 30 to 40% of their space and housing should be filled 30 to 60%.

Where speeds are high and temperature rises need to be kept to a minimum, a reduced amount of grease should be used. **Excessive amount of grease cause temperature rise which in turn causes the grease to soften and may allow leakage. With excessive grease fills oxidation and deterioration may cause lubricating efficiency to be lowered.**

Moreover, the standard bearing space can be found by formula (11.1)

$$V = K \cdot W \quad \cdots\cdots\cdots\cdots\cdots\cdots\cdots\cdots\cdots\cdots \quad (11.1)$$

where,

V : Quantity of bearing space open type (approx.), cm^3

K : Bearing space factor (see value of K in **Table 11.4**)

W : Mass of bearing, kg

Table 11.4 Bearing space factor K

Bearing type	Cage type	K
Ball bearings ❶	Pressed cage	61
NU-type cylindrical roller bearings ❷	Pressed cage Machined cage	50 36
N-type cylindrical roller bearings ❸	Pressed cage Machined cage	55 37
Tapered roller bearings	Pressed cage	46
Spherical roller bearings	Pressed cage Machined cage	35 28

❶ Does not apply top 160 series bearings.
❷ Does not apply to NU4 series bearings.
❸ Does not apply to N4 series bearings.

Table 11.5 Grease varieties and characteristics

Grease name	Lithium grease			Sodium grease (Fiber grease)	Calcium compound base grease
Thickener	Li soap			Na soap	Ca+Na soap Ca+Li soap
Base oil	Mineral oil	Diester oil	Silicone oil	Mineral oil	Mineral oil
Dropping point ˚C	170 ～ 190	170 ～ 190	200 ～ 250	150 ～ 180	150 ～ 180
Operating temperature range ˚C	-30 ～ +130	-50 ～ +130	-50 ～ +160	-20 ～ +130	-20 ～ +120
Mechanical stability	Excellent	**Good**	**Good**	Excellent ～ **Good**	Excellent ～ **Good**
Pressure resistance	**Good**	**Good**	**Poor**	**Good**	Excellent ～ **Good**
Water resistance	**Good**	**Good**	**Good**	**Good ～ Poor**	**Good ～ Poor**
Applications	Widest range of applications. Grease used in all types of rolling bearings.	Excellent low temperature and wear characteristics. Suitable for small sized and miniature bearings.	Suitable for high and low temperatures. Unsuitable for heavy load applications due to low oil film strength.	Some emulsification when water is introduced. Excellent characteristics at relatively high temperatures.	Excellent pressure resistance and mechanical stability. Suitable for bearings receiving shock loads.

Table 11.6 Grease brands and their nature

Manufacturer	Brand name	NTN code	Thickener	Base oil
Showa Shell Sekiyu	Alvania Grease 2	2A	Lithium	Mineral oil
	Alvania Grease 3	3A	Lithium	Mineral oil
	Alvania Grease RA	4A	Lithium	Mineral oil
	Alvania EP Grease 2	8A	Lithium	Mineral oil
	Aero Shell Grease 7	5S	Microgel	Diester
Kyodo Yushi	Multemp PS No. 2	1K	Lithium	Diester
	Multemp SRL	5K	Lithium	Tetraesterdiester
	E5	L417	Urea	Ether
Esso Sekiyu	Temprex N3 / Unilex N3	2E	Complex Li	Synthetic hydrocarbon
	Beacon 325	3E	Lithium	Diester
NOK Kluber	Isoflex Super LDS18	6K	Lithium	Diester
	Barrierta JFE552	LX11	Fluoride	Fluoride oil
	Grease J	L353	Urea	Ester
Toray Dow Corning, Silicone	SH33L	3L	Lithium	Methyl phenyl oil
	SH44M	4M	Lithium	Methyl phenyl oil
Nippon Oil	Multi Nok wide No. 2	6N	Sodium lithium	Diester mineral oil
	U-4	L412	Urea	Synthetic hydrocarbon + dialkyldiphenyl ether
Nihon Grease	MP-1	L448	Diurea	PAO + ester
Idemitsu Kosan	Apolo Autolex A	5A	Lithium	Mineral oil
Mobil Sekiyu	Mobile Grease 28	9B	Bentone	Synthetic hydrocarbon
Cosmo Oil	Cosmo Wide Grease WR3	2M	Na terephthalate	Diester mineral oil
Daikin	Demnum L200	LX23	PTFE	Fluoride oil

Note: For nature, see the manufacturer's catalog.

Aluminum grease	Non-soap base grease	
Al soap	Bentone, silica gel, urea, carbon black, fluorine compounds, etc.	
Mineral oil	Mineral oil	Synthetic oil
70 ～ 90	250 or above	250 or above
-10 ～ +80	-10 ～ +130	-50 ～ +200
Good ～ Poor	**Good**	**Good**
Good	**Good**	**Good**
Good	**Good**	**Good**
Excellent adhesion	Can be used in a wide range of low to high temperatures. Shows excellent heat resistance, cold resistance, chemical resistance, and other characteristics when matched with a suitable base oil and thickener.	
Suitable for bearings receiving vibration	Grease used in all types of rolling bearings.	

Base oil viscosity		Consistency	Dropping point°C	Operating temperature°C	Color	Characteristics
37.8°C	140mm²/s	273	181	−25～120	Amber	All-purpose grease
37.8°C	140mm²/s	232	183	−25～135	Amber	All-purpose grease
37.8°C	45mm²/s	252	183	−40～120	Amber	For low temperature
98.9°C	15.3mm²/s	276	187	−20～110	Brown	All-purpose extreme-pressure
98.9°C	3.1mm²/s	288	Min. 260	−73～149	Yellow-brown	MIL-G-23827
37.8°C	15.3mm²/s	265～295	190	−55～130	White	For low temperature and low torque
40°C	26mm²/s	250	192	−40～150	White	Wide range
40°C	72.3mm²/s	300	240	−30～180	White	For high temperature
40°C	113mm²/s	220～250	Min. 300	−30～160	Green	For high temperature
40°C	11.5mm²/s	265～295	177	−60～120	Brown	For low temperature and low torque
40°C	16.0mm²/s	265～295	Min. 180	−60～130	Yellow-green	For low temperature and low torque
40°C	400mm²/s	290	—	−35～250	White	
40°C	75mm²/s	—	280	−20～180	Gray-white	For high temperature
25°C	100mm²/s	300	200	−70～160	Light red-gray	For low temperature
40°C	32mm²/s	260	210	−40～180	Brown	For high temperature
37.8°C	30.9mm²/s	265～295	215	−40～135	Light brown	Wide range
40°C	58mm²/s	255	260	−40～180	Milk-white	For high temperature
40°C	40.6mm²/s	243	254	−40～150	Light brown	Wide range
37.8°C	50mm²/s	265～295	192	−25～150	Yellow	All-purpose grease
40°C	28mm²/s	315	Min. 260	−62～177	Red	MIL-G-81322C Wide range
37.8°C	30.1mm²/s	265～295	Min. 230	−40～150	Light brown	Wide range
40°C	200mm²/s	280	—	−60～300	White	

11.3.3 Grease replenishment

As the lubricating efficiency of grease declines with the passage of time, fresh grease must be re-supplied at proper intervals. The replenishment time interval depends on the type of bearing, dimensions, bearing's rotating speed, bearing temperature, and type of grease.

An easy reference chart for calculating grease replenishment intervals is shown in **Fig. 11.2**.

This chart indicates the replenishment interval for standard rolling bearing grease when used under normal operating conditions.

As operating temperatures increase, the grease re-supply interval should be shortened accordingly.

Generally, for every 10˚C increase in bearing temperature above 80˚C, the relubrication period is reduced by exponent "1/1.5".

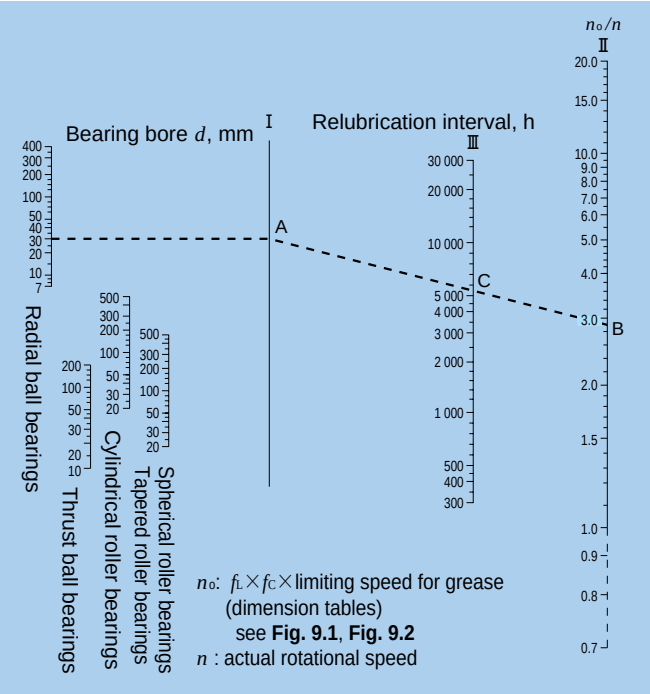

Fig. 11.2 Diagram for relubrication interval of greasing

(Example)
Find the grease relubrication time limit for deep groove ball bearing **6206**, with a radial load of 2.0 kN {204kgf} operating at 3,600 min^{-1}.

C_r / P_r = 19.5/2.0 kN = 9.8 from **Fig. 11.1**, the ajustment factor, f_L, is 0.96.

Allowable rotational speed from the dimensions tables for bearing 6206 is 11,000 min^{-1}. Allowable rotational speed n_o for a 2.0 kN {204 kgf} radial load is:

$$n_o = 0.96 \times 11{,}000 = 10{,}560 \text{ min}^{-1}$$

therefore, $\frac{n_o}{n} = \frac{10{,}560}{3{,}600} = 2.93$

The point where vertical line I intersects a horizontal line drawn from the point equivalent of d = 30 for the radial ball bearing shown in **Fig. 11.2** shall be point A. Find intersection point C where vertical line II intersects the straight line formed by joining point B (n_o/n = 2.93) with A with a straight line. It shows that grease life in this case is approximately 5,500 hours.

11.4 Solid grease (For bearings with solid grease)

"Solid grease" is a lubricant composed mainly of lubricating grease and ultra-high polymer polyethylene. Solid grease has the same viscosity as grease at normal temperature, If heated once and cooled (this process is referred to as "calcination") the grease hardens while maintaining a large quantity of lubricant. The result of this solidification is that the grease does not easily leak from the bearing, even when the bearing is subjected to strong vibrations or centrifugal force.

Bearings with solid grease are available in two types: the spot-pack type in which solid grease is injected into the cage, and the full-pack type in which all empty space around the rolling elements is filled with solid grease.

Spot-pack solid grease is standard for deep groove ball bearings, small diameter ball bearings, and bearing units. Full-pack solid grease is standard for self-aligning ball bearings, spherical roller bearings, and needle roller bearings.

Primary advantages:

(1) Grease leakage is minimal.
(2) Low bearing torque with spot-pack type solid grease

For more details, please refer to NTN special catalog of **Solid grease bearings**.

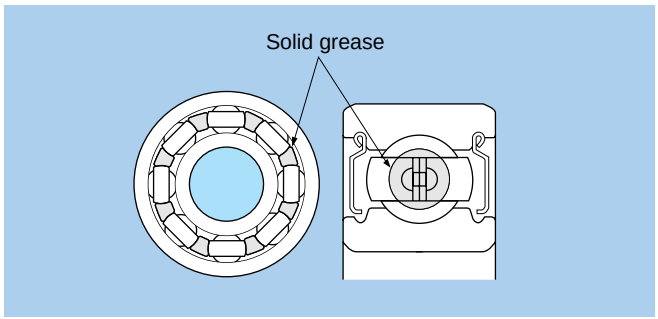

Fig. 11.3 Deep groove ball bearing with spot-pack solid grease (Z shield) (Standard for deep groove ball bearings)

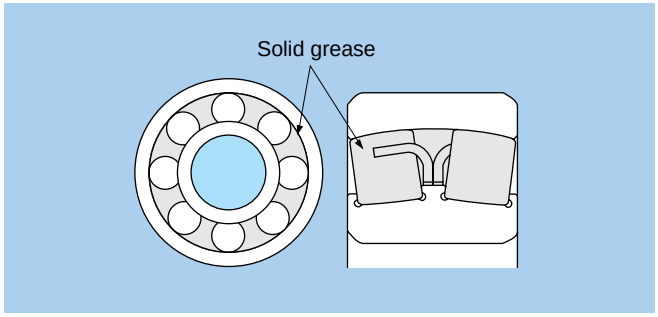

Fig. 11.4 Spherical roller bearing with full-pack solid grease (Standard for spherical roller bearings)

11.5 Oil lubrication

Oil lubrication is suitable for applications requiring that bearing-generated heat or heat applied to the bearing from other sources be carried away from the bearing and dissipated to the outside.**Table 11.7** shows the main methods of oil lubrication.

Table 11.7 Oil lubrication methods

Lubrication method	Example	Lubrication method	Example
(Oil bath lubrication) ● Oil bath lubrication is the most generally used method of lubrication and is widely used for low to moderate rotation speed applications. ● For horizontal shaft applications, oil level should be maintained at approximately the center of the lowest rolling element, according to the oil gauge, when the bearing is at rest. For vertical shafts at low speeds, oil level should be maintained at 50 - 80% submergence of the rolling elements.	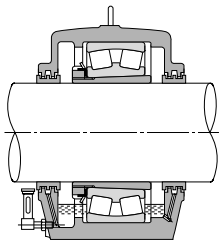	**(Disc lubrication)** ● In this method, a partially submerged disc rotates and pulls oil up into a reservoir from which it then drains down through the bearing, lubricating it.	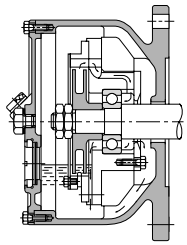
(Oil spray lubrication) ● In this method, an impeller or similar device mounted on the shaft draws up oil and sprays it onto the bearing. This method can be used at considerably high speeds.	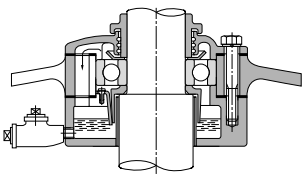	**(Oil mist lubrication)** ● Using pressurized air, lubricating oil is atomized before passing through the bearing. ● Due to the low lubricant resistance, this method is well suited to high speed applications.	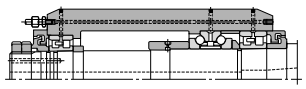
(Drip lubrication) ● In this method, oil is collected above the bearing and allowed to drip down into the housing where it becomes a lubricating mist as it strikes the rolling elements. Another version allows only slight amounts of oil to pass through the bearing. ● Used at relatively high speeds for light to moderate load applications. ● In most cases, oil volume is a few drops per minute.	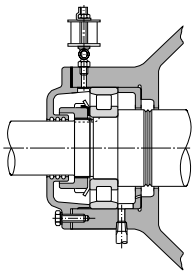	**(Air-oil lubrication)** ● In this method, the required minimum amount of lubricating oil is measured and fed to each bearing at ideal intervals using compressed air. ● With fresh lubricating oil constantly being fed to the bearing, and with the cooling effect of the compressed air, bearing temperature rise can be minimized. ● Because the required oil quantity is infinitesimal, the working environment can be kept clean. Air-oil lubrication units are available from NTN.	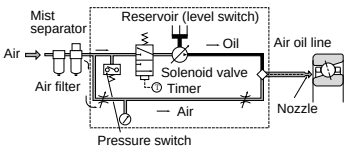
(Circulating lubrication) ● Used for bearing cooling applications or for automatic oil supply systems in which the oil supply is centrally located. ● One of the advantages of this method is that oil cooling devices and filters to maintain oil purity can be installed within the system. ● In order for oil to thoroughly lubricate the bearing, oil inlets and outlets must be provided on opposite sides of the bearing.	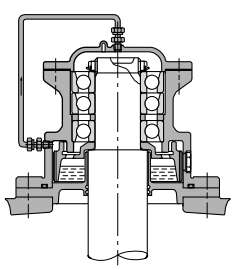	**(Oil jet lubrication)** ● This method lubricates by injecting oil under high pressure directly into the side of the bearing. This is a reliable system for high speed, high temperature or otherwise severe conditions. ● Used for lubricating the bearings in jet engines, gas turbines, and other high speed equipment. ● Under-race lubrication for machine tools is one example of this type of lubrication.	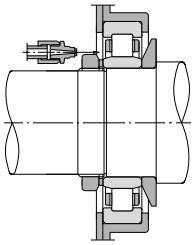

11.5.1 Selection of lubricating oil

Under normal operating conditions, **spindle oil**, **machine oil**, **turbine oil**, and other mineral oils are widely used for the lubrication of rolling bearings. However, for temperatures **above 150**˚C or **below -30**˚C, synthetic oils such as **diester oil**, **silicone oil**, and **fluorocarbon oil** are used.

For lubricating oils, viscosity is one of the most important properties and determines an oil's lubricating efficiency. If viscosity is too low, formation of the oil film will be insufficient, and damage will occur to the raceways of the bearing. If viscosity is too high, viscous resistance will also be great and result in temperature increases and friction loss. In general, for higher speed applications a lower viscosity oil should be used; for heavier load applications, a higher viscosity oil should be used.

In regard to operating temperature, **Table 11.8** lists the required oil viscosity for different types of rolling bearings. **Fig. 11.5** is an oil viscosity - operating temperature comparison chart for the purpose of selecting a lubrication oil with viscosity characteristics appropriate to an application.

Table 11.9 lists the selection standards for lubricating oil viscosity with reference to bearing operating conditions.

Table 11.8 Required lubricating oil viscosity for bearings

Bearing type	Dynamic viscosity mm^2/s
Ball bearings, Cylindrical roller bearings, Needle roller bearings	13
Spherical roller bearings, Tapered roller bearings, Needle roller thrust bearings	20
Self-aligning roller thrust bearings	30

11.5.2 Oil quantity

In forced oil lubrication systems, the heat radiated away by the housing and surrounding parts plus the heat carried away by the lubricating oil is approximately equal to the amount of heat generated by the bearing and other sources.

For general housing applications, the required quantity of oil can be found by formula (11.2).

$$Q = K \cdot q \quad \cdots\cdots\cdots\cdots\cdots\cdots\cdots\cdots\cdots\cdots \quad (11.2)$$

where,

Q: Quantity of oil for one bearing cm^3/min.
K: Allowable oil temperature rise factor (**Table 11.10**)
q: Amount of lubrication determined by diagram cm^3/min. (**Fig. 11.4**)

Because the amount of heat radiated will vary according to the type of housing, for actual operation it is advisable that the quantity of oil calculated by formula

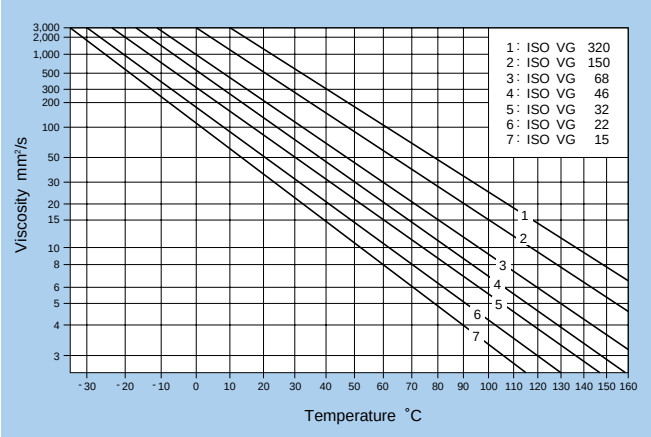

FIg. 11.5 Relation between lubricating oil viscosity and temperature

Table 11.8 Selection standards for lubricating oils (Reference)

Bearing operating temperature ˚C	d_n-value	Lubricating oil ISO viscosity grade (VG)		Suitable bearing
		Normal load	Heavy load or shock load	
−30～ 0	Up to allowable rotational speed	22, 32	46	All types
0～ 60	Up to 15,000	46, 68	100	All types
	15,000 ～80,000	32, 46	68	All types
	80,000 ～150,000	22, 32	32	All types but thrust ball bearings
	150,000～500,000	10	22, 32	Single row radial ball bearings, cylindrical roller bearings
60～100	Up to 15,000	150	220	All types
	15,000 ～80,000	100	150	All types
	80,000 ～150,000	68	100, 150	All types but thrust ball bearings
	150,000～500,000	32	68	Single row radial ball bearings, cylindrical roller bearings
100 ～150	Up to allowable rotational speed	320		All types
0～ 60	Up to allowable rotational speed	46, 68		Self-aligning roller bearings
60～100	Up to allowable rotational speed	150		

Note 1: Applied when lubrication method is either oil bath or circulating lubrication.
2: Please consult NTN Engineering in cases where operating conditions fall outside the range covered by this table.

Table 11.9 Factor K

Expelled oil temp minus supplied oil temp ˚C	K
10	1.5
15	1
20	0.75
25	0.6

(11.2) be multiplied by a factor or 1.5 or 2.0. Then, the amount of oil can be adjusted to correspond to actual operating conditions.

Furthermore, if it is assumed for calculation purposes that no heat is radiated by the housing, and that all bearing heat is removed by the oil, then the value for shaft diameter, $d = 0$.

(Example) For tapered roller bearing **30220U** mounted on a flywheel shaft with a radial load of 9.5 kN {969 kgf}, operating at 1,800 r/min, what is the amount of lubricating oil ' Q ' required to keep the bearing temperature rise below 15˚C.

$d = 100$ mm,

$dn = 100 \times 1{,}800 = 18 \times 10^4$

From **Fig. 11.6** $q = 180 \text{cm}^3 / \text{min}$

Assume the bearing temperature is approximately equal to the expelled oil temperature,

from **Table 11.10**, since $K = 1$

$Q = 1 \times 180 = 180 \text{cm}^3 / \text{min}$

11.5.3 Relubrication intervals

The intervals at which lubricating oil should be changed varies depending upon operating conditions, oil quantity, and type of oil used. In general, for oil bath lubrication where the operating temperature is 50˚C or less, oil should be replaced once a year. When the operating temperature is between 80˚C – 100˚C, oil should be replaced at least every three months. For important equipment, it is advisable that lubricating efficiency and oil purity deterioration be checked regularly to determine when oil replacement is necessary.

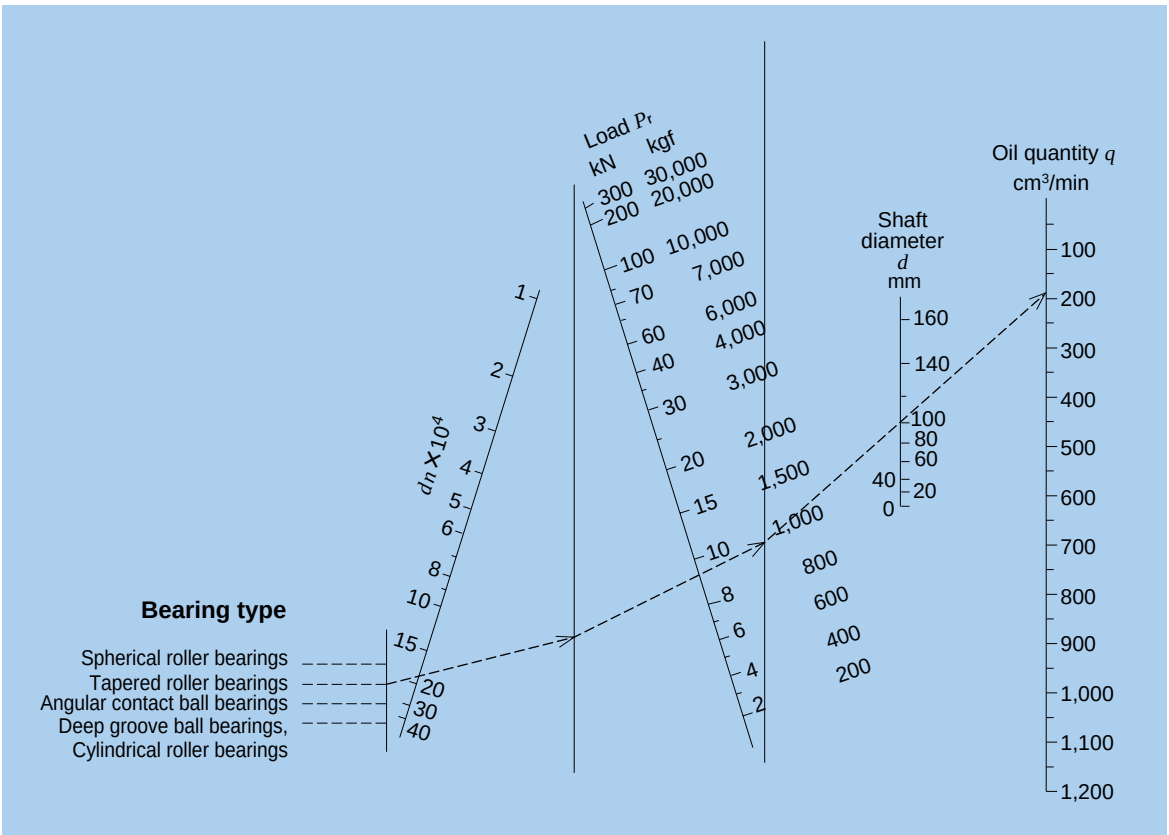

Fig. 11.6 Oil quantity guidelines

12. External bearing sealing devices

External seals have two main functions: to prevent lubricating oil from leaking out, and, to prevent dust, water, and other contaminants from entering the bearing. When selecting a seal, the following factors need to be taken into consideration: the type of lubricant (oil or grease), seal peripheral speed, shaft fitting errors, space limitations, seal friction and resultant heat increase, and cost.

Sealing devices for rolling bearings fall into two main classifications: non-contact seals and contact seals.

- **Non-contact seals**: Non-contact seals utilize a small clearance between the shaft and the housing cover. Therefore friction is negligible, making them suitable for high speed applications.

  In order to improve sealing capability, clearance spaces are often filled with lubricant.

- **Contact seals**: A contact seal is a seal whereby a formed synthetic rubber lip on a steel plate is pressed against the shaft. Contact seals are generally far superior to non-contact seals in sealing efficiency, although their friction torque and temperature rise coefficients are higher. Furthermore, because the lip portion of a contact seal slides while in contact with the shaft, the allowable seal peripheral speed varies depending on seal type.

Lubrication is required in the place where the seal lip makes contact with the shaft. Ordinary bearing lubricant can also be used for this purpose.

The following chart lists the special characteristics of seals and other points to be considered when choosing an appropriate seal.

<table>
<tr><th>Type</th><th>Seal construction</th><th>Name</th><th>Seal characteristics and selection considerations</th></tr>
<tr><td rowspan="6">Non-contact seals</td><td rowspan="3"> 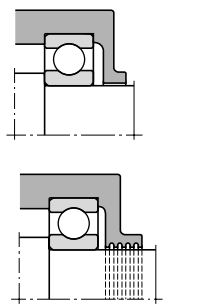 </td><td>Clearance seal</td><td>This is an extremely simple seal design with a small radial clearance.</td><td rowspan="3">Cautionary points regarding selection
• In order to improve sealing efficiency, clearances between the shaft and housing should be minimized. However, care should be taken to confirm shaft/bearing rigidity and other factors to avoid direct shaft-housing contact during operation.
Oil groove clearance (reference)
<table><tr><th>Shaft diameter mm</th><th>Clearance mm</th></tr><tr><td>Up to 50
50 or above</td><td>0.2〜0.4
0.5〜1.0</td></tr></table>• Oil groove width, depth (reference)
width : 2〜5 mm
depth : 4〜5 mm
• Three or more oil grooves should be provided.
• Sealing efficiency can be further improved by filling the oil groove portion with grease of which the consistency grade is 150 to 200.
• Grease is generally used as the lubricant for labyrinth seals, and, except in low speed applications, is commonly used together with other sealing devices.</td></tr>
<tr><td>Oil groove seal
(oil grooves on housing side)</td><td>Several concentric oil grooves are provided on the housing inner diameter to greatly improve the sealing effect. When the grooves are filled with lubricant, the intrusion of contaminants from the outside is prevented.</td></tr>
<tr><td> 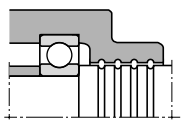 </td><td>Oil groove seal
(oil grooves on shaft and housing side)</td><td>Oil grooves are provided on both the shaft outer diameter and housing inner diameter for a seal with even greater sealing efficiency.</td></tr>
<tr><td rowspan="3"> 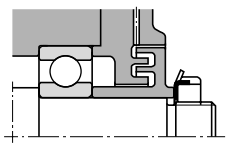 </td><td>Axial labyrinth seal</td><td>This seal has a labyrinth passageway on the axial side of the housing.</td><td rowspan="3">Cautionary points regarding selection
• In order to improve sealing efficiency, labyrinth passageway clearances should be minimized. However, care should be taken to confirm shaft/bearing rigidity, fit, internal clearances and other factors to avoid direct contact between labyrinth projections during operation.
Labyrinth clearance (reference)
<table><tr><th rowspan="2">Shaft diameter mm</th><th colspan="2">Clearance mm</th></tr><tr><th>Radial direction</th><th>Axial direction</th></tr><tr><td>—〜 50</td><td>0.2〜0.4</td><td>1.0〜2.0</td></tr><tr><td>50〜200</td><td>0.5〜1.0</td><td>3.0〜5.0</td></tr></table>• Sealing efficiency can be further improved by filling the labyrinth passageway with grease of which the consistency grade is 150 to 200.
• Labyrinth seals are suitable for high speed applications.</td></tr>
<tr><td> 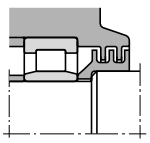 </td><td>Radial labyrinth seal</td><td>A labyrinth passageway is affixed to the radial side of the housing. For use with split housings. This offers better sealing efficiency than axial labyrinth seals.</td></tr>
<tr><td> 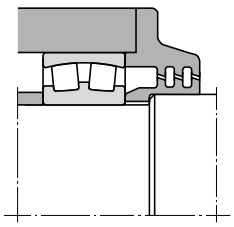 </td><td>Aligning labyrinth seal</td><td>The seal's labyrinth passageway is slanted and has sufficient clearance to prevent contact between the housing projections and the shaft even as the shaft realigns.</td></tr>
</table>

Non-contact seals

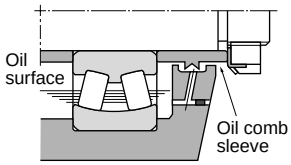

Oil comb sleeve

In this design, lubricating oil that makes its way out of the housing along the shaft is thrown off by projections on the oil comb sleeve and recirculated.

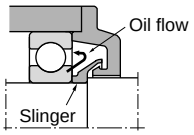

Slinger provided in the housing

Seal type whereby a slinger is provided in the housing that prevents lubricant from leaking by centrifugal force produced by rotation.

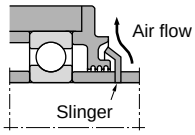

Slinger provided outside the housing

By mounting a slinger on the outside of the housing, centrifugal force helps to prevent dust and other solid contaminants from entering.

Cautionary points regarding selection

- Seal type whereby a slinger that utilizes centrifugal force is provided on the rotating shaft.
- If mounted on the inside of the housing, the slinger should function to seal in lubricant by centrifugal force produced by rotation.
- If mounted on the outside of the housing, the slinger should function to seal out foreign matter by fan effect produced by rotation.
- These seal types are commonly employed together with other sealing devices.

Contact seals

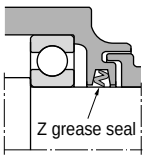

Z grease seal

In cross section resembling the letter "Z," this seal's empty spaces are filled with grease.
The seal is commonly used with a plummer block (bearing housing).

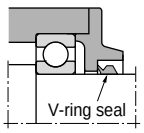

V-ring seal

This design enhances sealing efficiency with a lip that seals from the axial direction. With the aid of centrifugal force, this seal also offers effective protection against dust, water, and other contaminants entering the bearing. Can be used for both oil and grease lubrication.
At seal peripheral speeds in excess of 12 m/s, seal ring fit is lost due to centrifugal force, and a clamping band is necessary to hold it in place.

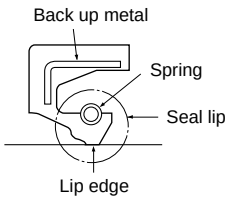

Oil seal

Oil seals are widely used, and their shapes and dimensions are standardized under JIS B 2402.
In this design, a ring-shaped spring is installed in the lip section. As a result, optimal contact pressure is exerted between the lip edge and shaft surface, and sealing efficiency is good.

When the bearing and oil seal are in close proximity, the internal clearance of the bearing may be reduced by heat produced by the oil seal. In addition to considering the heat generated by contact seals at various peripheral speeds, internal bearing clearances must also be selected with caution.

Depending on its orientation, the seal may function to prevent lubricant from leaking out or foreign matter from getting in.

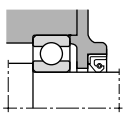
For dust proof

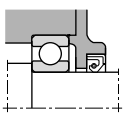
For preventing lubricant leakage

Cautionary points regarding selection

Shaft surface roughness (reference)

Peripheral speed m/s	Surface roughness	
	Ra	Rmax
～ 5	0.8a	3.2s
5～10	0.4a	1.6s
10～	0.2a	0.8s

Shaft material (reference)

Material	Machine structural carbon steel, Low carbon alloy steel, Stainless steel
Surface hardness	HRC 40 or higher necessary HRC 55 or higher advisable
Processing method	Final grinding without repeat (moving), or buffed after hard chrome plating

Allowable speed/temperature according to seal type/material (reference)

Seal type/material		Allowable peripheral speed m/s $\left(V_{(m/s)}=\frac{\pi \times d_{(mm)} \times n_{(r/min)}}{60,000}\right)$	Allowable temp ˚C
Oil seals	Nitrile rubber	16 or less	-25 ～+120
	Acrylic rubber	26 or less	-15 ～+150
	Fluorinated rubber	32 or less	-30 ～+200
Z-seal	Nitrile rubber	6 or less	-25 ～+120
V-ring	Nitrile rubber	40 or less	-25 ～+120

Type	Seal construction	Name	Seal characteristics and selection considerations
Combination seals	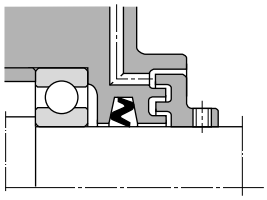	**Z-seal + Labyrinth seal**	This is an example of an axial labyrinth seal which has been combined with a Z-seal to increase its sealing efficiency. The axial labyrinth seal is affixed to the shaft with a setting bolt or other method. In the diagram on the left, both the direction of the Z-seal and the labyrinth seal are oriented to keep dust and other contaminants out of the bearing. Because a Z-seal has been incorporated, the allowable peripheral speed should not exceed 6 m/s.
	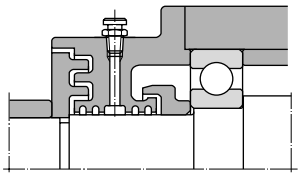	**Labyrinth seal + Oil groove seal + Slinger**	This is an example of a combination of three different non-contact seals. It has the advantage of preventing both lubricant leakage from inside the bearing and infiltration of dust and other contaminants from the outside. It is widely used on mining equipment and as a sealing system with plummer blocks in extremely dusty application conditions.
	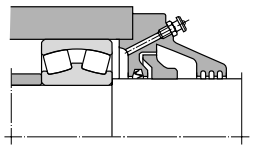	**Oil groove seal + Slinger + Z-seal**	This is an example where an oil groove seal and slinger have been combined with a Z-seal to increase its sealing efficiency. In the diagram on the left, all three seals have been oriented to keep dust and other contaminants out of the bearing. The combination is widely used on mining equipment and as a sealing system with plummer blocks in extremely dusty application conditions.

13. Bearing Materials

13.1 Raceway and rolling element materials

While the contact surfaces of a bearing's raceways and rolling elements are subjected to repeated heavy stress, they still must maintain high precision and rotational accuracy. To accomplish this, the raceways and rolling elements must be made of a material that has high hardness, is resistant to rolling fatigue, is wear resistant, and has good dimensional stability. The most common cause of fatigue in bearings is the inclusion of non-metallic impurities in the steel. Non-metallic inclusion includes hard oxides that can cause fatigue crack. Clean steel with minimal non-metallic inclusion must therefore be used.

For all NTN bearings, steel low in oxygen content and non-metallic impurities, then refined by a vacuum degassing process as well as outside hearth smelting, is used. For bearings requiring especially high reliability and long life, steels of even higher in purity, such as vacuum melted steel (VIM, VAR) and electro-slag melted steel (ESR), are used.

1) High/mid carbon alloy steel

In general, steel varieties which can be hardened not just on the surface but also deep hardened by the so-called "through hardening method" are used for the raceways and rolling elements of bearings. Foremost among these is high carbon chromium bearing steel, which is widely used. For large type bearings and bearings with large cross sectional dimensions, induction hardened bearing steel incorporating manganese or molybdenum is used. Also in use is mid-carbon chromium steel incorporating silicone and manganese, which gives it hardening properties comparable to high carbon chromium steel.

Table 13.1 gives chemical composition of representative high carbon chrome bearing steel that meets JIS standards. SUJ2 is frequently used. SUJ3 with enhanced hardening characteristics containing a large quantity of Mn is used for large bearings. SUJ5 is SUJ3 to which Mo has been added to further enhance hardening characteristics, and is used for oversized bearings or bearings with thick walls.

The chemical composition of SUJ2 is equivalent to AISI 52100 (US) and DIN 100Cr6 (Germany).

2) Case hardened (carburizing) steel

Carburizing hardens the steel from the surface to the proper depth, forming a relatively soft core. This provides hardness and toughness, making the material suitable for impact loads. NTN uses case hardened steel for almost all of its tapered roller bearings. In terms of case hardened steel for NTN's other bearings, chromium steel and chrome molybdenum steel are used for small to medium sized bearings, and nickel chrome molybdenum steel is used for large sized bearings.

Table 13.2 gives the chemical composition of representative JIS case hardened steel.

3) Heat resistant bearing steel

When bearings made of ordinary high carbon chromium steel which have undergone standard heat treatment are used at temperatures above 120˚C for long durations, unacceptably large dimensional changes can occur. For this reason, a dimension stabilizing treatment (TS treatment) has been devised for very high temperature applications. This treatment however reduces hardness of the material, thereby reducing rolling fatigue life. (See item 3.3.2 on page A-18.)

For standard high temperature bearings used at temperatures from 150˚C – 200˚C, the addition of silicone to the steel improves heat resistance and results in a bearing with excellent rolling fatigue life with minimal dimensional change or softening at high temperatures.

A variety of heat resistant steels are also incorporated in bearings to minimize softening and dimensional changes when used at high temperatures. Two of these are high speed molybdenum steel and high speed tungsten steel. For bearings requiring heat resistance in high speed applications, there is also heat resistant case hardening molybdenum steel. (refer to **Table 13.3**)

4) Corrosion resistant bearing steel

For applications requiring high corrosion resistance, stainless steel is used. To achieve this corrosion resistance a large proportion of the alloying element chrome is added to martensite stainless steel. (**Table 13.4**)

5) Induction hardened steel

Besides the use of surface hardening steel, induction hardening is also utilized for bearing raceway surfaces, and for this purpose mid-carbon steel is used for its lower carbon content instead of through hardened steel. For induction hardening of the deep layers required for larger bearings and bearings with large surface dimensions, mid-carbon steel is fortified with chrome and molybdenum.

6) Other bearing materials

For ultra high speed applications and applications requiring very high level corrosion resistance, ceramic bearing materials such as Si_3N_4 are also available.

13.2 Cage materials

Bearing cage materials must have the strength to withstand rotational vibrations and shock loads. These materials must also have a low friction coefficient, be light weight, and be able to withstand bearing operation temperatures.

For small and medium sized bearings, pressed cages of cold or hot rolled steel with a low carbon content of approx. 0.1% are used. However, depending on the application, austenitic stainless steel is also used.

Machined cages are generally used for large bearings. Carbon steel for machine structures or high-strength cast brass is frequently used for the cages, but other materials such as aluminum alloy are also used.

Tables 13.5 and **13.6** give the chemical composition for these representative cage materials.

Besides high-strength brass, medium carbon nickel, chrome and molybdenum that has been hardened and tempered at high temperatures are also used for bearings used in aircraft. The materials are often plated with silver to enhance lubrication characteristics.

High polymer materials that can be injection molded are also widely used for cages. Polyamide resin reinforced with glass fibers is generally used. Cages made of high-polymer materials are lightweight and corrosion resistant. They also have superior damping and characteristics and lubrication performance. **Heat resistant polyimide resins now enable the production of cages that perform well in applications ranging between -40˚C – 120˚C.** However, they are not recommended for use at temperatures exceeding 120˚C.

Table 13.1 Chemical composition of representative high carbon chrome bearing steels

Standard	Symbol	Chemical composition (%)							Remarks
		C	Si	Mn	P	S	Cr	Mo	
JIS G 4805	SUJ2	0.95～1.10	0.15～0.35	Max. 0.50	Max. 0.025	Max. 0.025	1.30～1.60	Max. 0.08	
	SUJ3	0.95～1.10	0.40～0.70	0.90～1.15	Max. 0.025	Max. 0.025	0.90～1.20	Max. 0.08	
	SUJ5	0.95～1.10	0.40～0.70	0.90～1.15	Max. 0.025	Max. 0.025	0.90～1.20	0.10～0.25	
ASTM A295	52100	0.98～1.10	0.15～0.35	0.25～0.45	Max. 0.025	Max. 0.025	1.30～1.60	Max. 0.10	SUJ2 equivalent
ASTM A485	Grade 1	0.90～1.05	0.45～0.75	0.95～1.25	Max. 0.025	Max. 0.025	0.90～1.20	Max. 0.10	SUJ3 equivalent
	Grade 3	0.95～1.10	0.15～0.35	0.65～0.90	Max. 0.025	Max. 0.025	1.10～1.50	0.20～0.30	SUJ5 equivalent

Table 13.2 Chemical composition of representative case hardened steel (carburizing steel)

Standard	Symbol	Chemical composition (%)							
		C	Si	Mn	P	S	Ni	Cr	Mo
JIS G 4104	SCr420	0.18～0.23	0.15～0.35	0.60～0.85	Max. 0.030	Max. 0.030	—	0.90～1.20	—
JIS G 4105	SCM420	0.18～0.23	0.15～0.35	0.60～0.85	Max. 0.030	Max. 0.030	—	0.90～1.20	0.15～0.30
JIS G 4103	SNCM220	0.17～0.23	0.15～0.35	0.60～0.90	Max. 0.030	Max. 0.030	0.40～0.70	0.40～0.65	0.15～0.30
	SNCM420	0.17～0.23	0.15～0.35	0.40～0.70	Max. 0.030	Max. 0.030	1.60～2.00	0.40～0.65	0.15～0.30
	SNCM815	0.12～0.18	0.15～0.35	0.30～0.60	Max. 0.030	Max. 0.030	4.00～4.50	0.70～1.00	0.15～0.30
ASTM A534	5120	0.17～0.22	0.15～0.35	0.70～0.90	Max. 0.030	Max. 0.040	—	0.70～0.90	—
	4118	0.18～0.23	0.15～0.35	0.70～0.90	Max. 0.030	Max. 0.040	—	0.40～0.60	0.08～0.15
	8620	0.18～0.23	0.15～0.35	0.70～0.90	Max. 0.030	Max. 0.040	0.40～0.70	0.40～0.60	0.15～0.25
	4320	0.17～0.22	0.15～0.35	0.45～0.65	Max. 0.030	Max. 0.040	1.65～2.00	0.40～0.60	0.20～0.30
	9310	0.08～0.13	0.15～0.35	0.45～0.65	Max. 0.025	Max. 0.025	3.00～3.50	1.00～1.40	0.08～0.15

Table 13.3 Chemical composition of high-speed steel

Standard		Chemical composition (%)											
		C	Si	Mn	P	S	Cr	Mo	V	Ni	Cu	Co	W
AMS	6491 (M50)	0.77～0.85	Max. 0.25	Max. 0.35	Max. 0.015	Max. 0.015	3.75～4.25	4.00～4.50	0.90～1.10	Max. 0.15	Max. 0.10	Max. 0.25	Max. 0.25
	5626	0.65～0.80	0.20～0.40	0.20～0.40	Max. 0.030	Max. 0.030	3.75～4.50	Max. 1.00	0.90～1.30	—	—	—	17.25～18.25
	2315 (M50NiL)	0.11～0.15	0.10～0.25	0.15～035	Max. 0.015	Max. 0.010	4.00～4.25	4.00～4.50	1.13～1.33	3.20～3.60	Max. 0.10	Max. 0.25	Max. 0.25

Table 13.4 Chemical composition of stainless steel

Standard	Symbol	Chemical composition (%)						
		C	Si	Mn	P	S	Cr	Mo
JIS G 4303	SUS440C	0.95～1.20	Max. 1.00	Max. 1.00	Max. 0.040	Max. 0.030	16.00～18.00	Max. 0.75
AISI	440C	0.95～1.20	Max. 1.00	Max. 1.00	Max. 0.040	Max. 0.030	16.00～18.00	Max. 0.75

Table 13.5 Chemical composition of steel plate for pressed cages and carbon steel for machined cages

	Standard	Symbol	Chemical composition (%)						
			C	Si	Mn	P	S	Ni	Cr
Pressed retainer	JIS G 3141	SPCC	—	—	—	—	—	—	—
	JIS G 3131	SPHC	—	—	—	Max. 0.050	Max. 0.050	—	—
	BAS 361	SPB2	0.13～0.20	Max. 0.04	0.25～0.60	Max. 0.030	Max. 0.030	—	—
	JIS G 4305	SUS304	Max. 0.08	Max. 1.00	Max. 2.00	Max. 0.045	Max. 0.030	8.00～10.50	18.00～20.00
Machined retainer	JIS G 4051	S25C	0.22～0.28	0.15～0.35	0.30～0.60	Max. 0.030	Max. 0.035	—	—

Table 13.6 Chemical composition of high-strength cast brass for machined cages

Standard	Symbol	Chemical composition (%)							Impurities	
		Cu	Zn	Mn	Fe	Al	Sn	Ni	Pb	Si
JIS H 5120	CAC301	55.0～60.0	33.0～42.0	0.1～1.5	0.5～1.5	0.5～1.5	Max. 1.0	Max. 1.0	Max. 0.4	Max. 0.1

14. Shaft and Housing Design

Depending upon the design of a shaft or housing, the shaft may be influenced by an unbalanced load or other factors which can then cause large fluctuations in bearing efficiency. For this reason, it is necessary to pay attention to the following when designing shaft and housing:

1) Bearing arrangement selection; most effective fixing method for bearing arrangement
2) Selection of shoulder height and fillet radius of housing and shaft.
3) Shape precision and dimensions of fitting; area runout tolerance of shoulder.
4) Machining precision and mounting error of housing and shaft suitable for allowable alignment angle and inclination of bearing.

14.1 Fixing of bearings

When fixing a bearing in position on a shaft or housing, there are many instances where the interference fit alone is not enough to hold the bearing in place. Bearings must be fixed in place by various methods so that they do not move axially when placed under load.

Moreover, **even bearings which are not subjected to axial loads (such as cylindrical roller bearings, etc.), must be fixed in place axially because of the potential for ring displacement due to shaft deflection by moment load which may cause damage.**

Table 14.1 shows general bearing fixing methods, and **Table 14.2** shows fixing methods for bearings with tapered bores.

Table 14.1 General bearing fixing methods

Inner ring clamp	Outer ring clamp	Snap ring
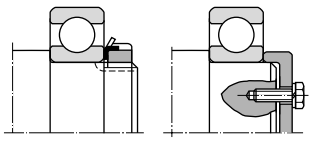	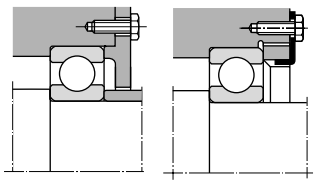	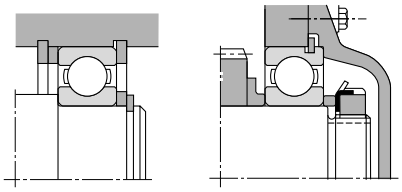
The most common method of fixing bearings in place is to use clamping nuts or bolts to hold the bearing or housing abutment against the ring end face.		Use of snap rings regulated under JIS B 2804, B 2805, and B 2806, makes construction very simple. However, interference with chamfers, bearing installation dimensions, and other related specifications must be considered carefully. Snap rings are not suitable for applications requiring high accuracy and where the snap ring receives large axial loads.

Table 14.2 Fixing methods for bearings with tapered bores

Adapter sleeve mounting	Withdrawal sleeve mounting	Split ring mounting
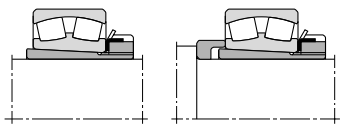	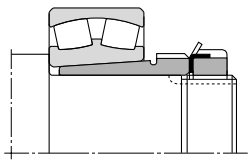	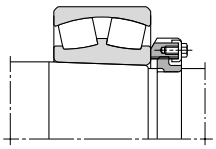
When installing bearings on cylindrical shafts, adapter sleeves or withdrawal sleeves can be used to fix bearings in place axially. The adapter sleeve is fastened in place by frictional force between the shaft and inner diameter of the sleeve.		For installation of tapered bore bearings directly on tapered shafts, the bearing is held in place by a split ring inserted into a groove on the shaft, and is fixed in place by a split ring nut or screw.

14.2 Bearing fitting dimensions

14.2.1 Abutment height and fillet radius

The shaft and housing abutment height (h) should be larger than the bearings' maximum allowable chamfer dimensions ($r_{s\ max}$), and the abutment should be designed so that it directly contacts the flat part of the bearing end face. The fillet radius (r_a) must be smaller than the bearing's minimum allowable chamfer dimension ($r_{s\ min}$) so that it does not interfere with bearing seating. **Table 14.3** lists abutment height (h) and fillet radius (r_a).

For bearings to be applied to very large axial loads as well, shaft abutments (h) should be higher than the values in the table.

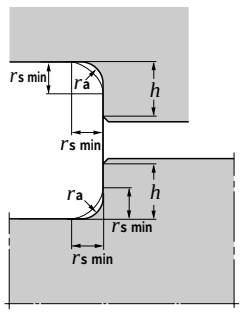

Table 14.3 Fillet radius and abutment height Unit mm

$r_{s\ min}$	$r_{as\ max}$	h (min)	
		Normal use❶	Special use❷
0.05	0.05	0.3	
0.08	0.08	0.3	
0.1	0.1	0.4	
0.15	0.15	0.6	
0.2	0.2	0.8	
0.3	0.3	1.25	1
0.6	0.6	2.25	2
1	1	2.75	2.5
1.1	1	3.5	3.25
1.5	1.5	4.25	4
2	2	5	4.5
2.1	2	6	5.5
2.5	2	6	5.5
3	2.5	7	6.5
4	3	9	8
5	4	11	10
6	5	14	12
7.5	6	18	16
9.5	8	22	20
12	10	27	24
15	12	32	29
19	15	42	38

❶ If bearing supports large axial load, the height of the shoulder must exceed the value given here.
❷ Used when axial load is light. These values are not suitable for tapered roller bearings, angular ball bearings and spherical roller bearings.

Note: $r_{as\ max}$ maximum allowable fillet radius.

14.2.2 For spacer and ground undercut

In cases where a fillet radius ($r_{a\ max}$) larger than the bearing chamfer dimension is required to strengthen the shaft or to relieve stress concentration (**Fig. 14.1a**), or where the shaft abutment height is too low to afford adequate contact surface with the bearing (**Fig. 14.1b**), spacers may be used effectively.

Relief dimensions for ground shaft and housing fitting surfaces are given in **Table 14.4**.

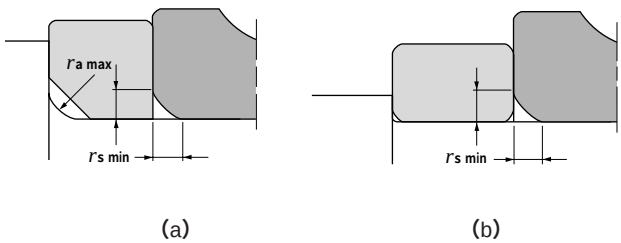

Fig. 14.1 Bearing mounting with spacer

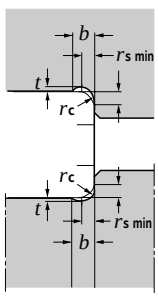

Table 14.4 Relief dimensions for ground shaft

Unit mm

$r_{s\ min}$	Relief dimensions		
	b	t	r_c
1	2	0.2	1.3
1.1	2.4	0.3	1.5
1.5	3.2	0.4	2
2	4	0.5	2.5
2.1	4	0.5	2.5
2.5	4	0.5	2.5
3	4.7	0.5	3
4	5.9	0.5	4
5	7.4	0.6	5
6	8.6	0.6	6
7.5	10	0.6	7

14.2.3 Thrust bearings and fitting dimensions

For thrust bearings, it is necessary to make the raceway disc back face sufficiently broad in relation to load and rigidity, and fitting dimensions from the dimension tables should be adopted. (**Figs. 14.2** and **14.3**)

For this reason, shaft and abutment heights will be larger than for radial bearings. (Refer to dimension tables for all thrust bearing fitting dimensions.)

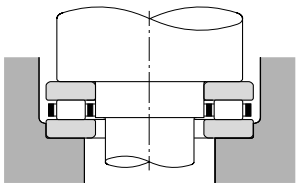

Fig. 14.2

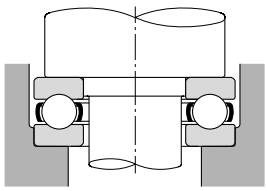

Fig. 14.3

14.3 Shaft and housing accuracy

Table 14.5 shows the accuracies for shaft and housing fitting surface dimensions and configurations, as well as fitting surface roughness and abutment squareness for normal operating conditions.

Table 14.5 Shaft and housing accuracy

Characteristics		Shaft	Housing
Dimensional accuracy		IT6 (IT5)	IT7 (IT5)
Roundness (max.) Cylindricity		IT3	IT4
Abutment squareness		IT3	IT3
Fitting surface roughness	Small size bearings	0.8a	1.6a
	Mid-large size bearings	1.6a	3.2a

Note: For precision bearings (P4, P5 accuracy), it is necessary to increase the circularity and cylindricity accuracies in this table by approximately 50%. For more specific information, please consult the NTN precision rolling bearing catalog.

14.4 Allowable bearing misalignment

A certain amount of misalignment of a bearing's inner and outer rings occurs as a result of shaft flexure, shaft or housing finishing irregularities, and minor installation error. In situations where the degree of misalignment is liable to be relatively large, self-aligning ball bearings, spherical roller bearings, bearing units and other bearings with aligning properties are advisable. Although allowable misalignment will vary according to bearing type, load conditions, internal clearances, etc., **Table 14.6** lists some general misalignment standards for normal applications. In order to avoid shorter bearing life and cage failure, it is necessary to maintain levels of misalignment below these standard levels.

Table 14.6 Bearing type and allowable misalignment/alignment allowance

Allowable misalignment	
Deep groove ball bearings	1/1,000〜1/300
Angular contact ball bearings	
Single row	1/1,000
Multi row	1/10,000
back to back arrangement	1/10,000
Face to face arrangement	1/1,000
Cylindrical roller bearings	
Bearing series 2, 3, 4	1/1,000
Bearing series 22, 23, 49, 30	1/2,000
Tapered roller bearings	
Single row/back to back arrangement	1/2,000
Face-to-face arrangement	1/1,000
Needle roller bearings	1/2,000
Thrust bearings (excluding self-aligning roller thrust bearings)	1/10,000
Alignment allowance	
Self-aligning ball bearings	1/20〜1/15
Spherical roller bearings	1/50〜1/30
Self-aligning roller thrust bearings	1/30
Ball bearing units	
Without cover	1/30
With cover	1/50

15. Bearing Handling

Bearings are precision parts and, in order to preserve their accuracy and reliability, care must be exercised in their handling.
In particular, bearing cleanliness must be maintained, sharp impacts avoided, and rust prevented.

15.1 Bearing storage

Most rolling bearings are coated with a rust prevent oil before being packed and shipped, and they should be stored at room temperature with a relative humidity of less than 60%.

15.2 Installation

When bearings are being installed on shafts or in housings, the bearing rings should never be struck directly with a hammer or a drift, as shown in **Fig. 15.1**, because damage to the bearing may result. **Any force applied to the bearing should always be evenly distributed over the entire bearing ring face.** Also, when fitting both rings simultaneously, applying pressure to one ring only, as shown in **Fig. 15.2**, should be avoided because indentations in the raceway surface may be caused by the rolling elements, or other internal damage may result.

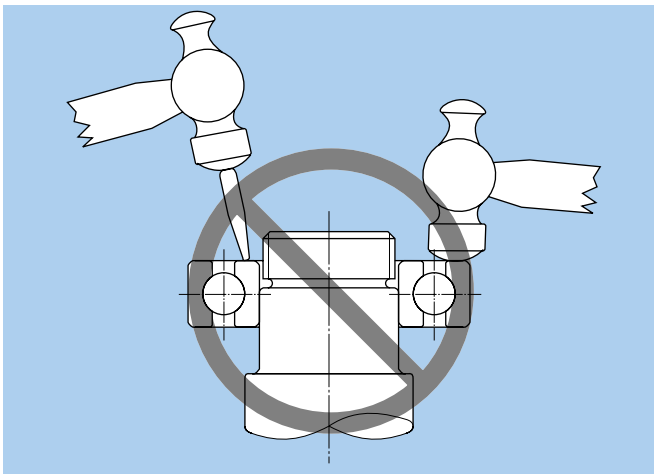

Fig. 15.1

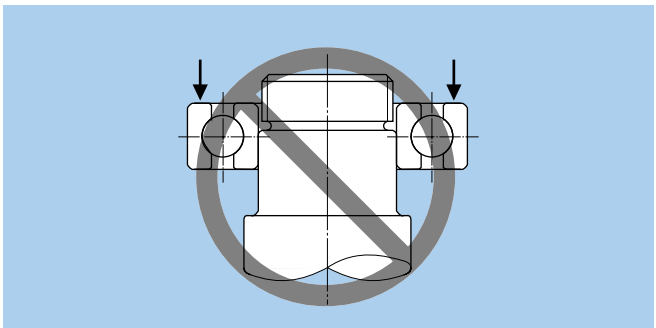

Fig. 15.2

15.2.1 Installation preparations

Bearings should be fitted in a clean, dry work area. Especially for small and miniature bearings, a "clean room" should be provided as any contamination particles in the bearing will greatly affect bearing efficiency.

All dirt, burrs or metal filings must be removed from the shaft, housing and tools used for mounting the bearings. Shaft and housing fitting surfaces should also be checked for roughness, dimensional and design accuracy, and to ensure that they are within allowable tolerance limits.

Bearings should not be unwrapped until just prior to installation. Normally, bearings to be used with grease lubricant can be installed as is, without removing the rust prevent oil. However, for bearings which will use oil lubricant, or in cases where mixing the grease and rust prevent oil would result in loss of lubrication efficiency, the rust prevent oil should be removed by washing with benzene or petroleum solvent and dried before installation. Bearings should also be washed and dried before installation if the package has been damaged or there are other chances that the bearings have been contaminated. **Double shielded bearings and sealed bearings should never be washed.**

15.2.2 Installing cylindrical bore bearings

For bearings with relatively small interference, the entire circumference of the raceway can be uniformly press-fit at room temperature as shown in **Fig. 15.3**. Usually, bearings are installed by striking the sleeve with a hammer; however, when installing a large number of bearings, a mechanical or hydraulic press should be used.

When installing non-separable bearings on a shaft and in a housing simultaneously, a pad which distributes the fitting pressure evenly over the inner and outer rings is used as shown in **Fig. 15.4**. If the fitting is too tight or bearing size is large, a considerable amount of force is required to install the bearing at room temperature. Installation can be facilitated by heating and expanding the inner ring beforehand. The required relative temperature difference between the inner ring and the shaft depends on the amount of interference and the shaft fitting surface diameter. **FIg. 15.5** shows the relation between the bearing inner bore diameter temperature differential and the amount of thermal expansion. **In any**

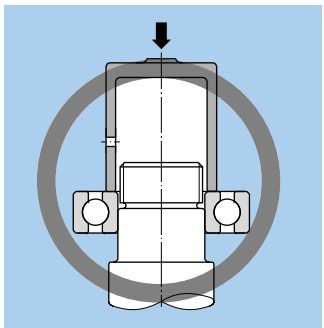

Fig. 15.3 Fitting sleeve pressure against inner ring

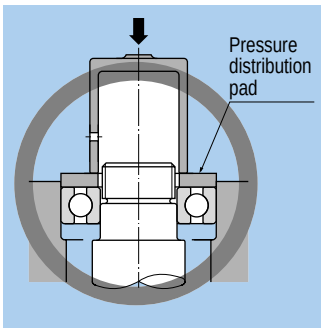

Fig. 15.4 Fitting sleeve pressure against inner /outer ring simultaneously

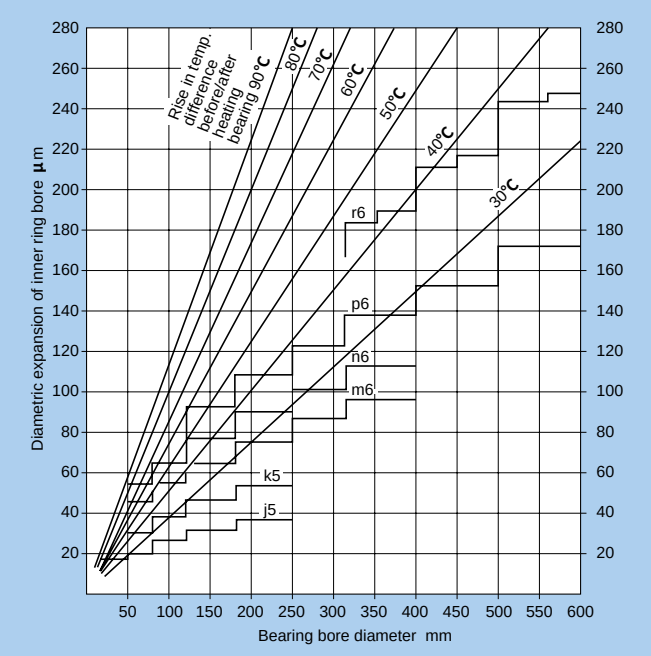

Fig. 15.5 Temperature required for heat-fitting inner ring

event, bearings should never be heated above 120˚C.

The most commonly used method of heating bearings is to immerse them in hot oil. This method must not be used for sealed bearings or shield bearings with grease sealed inside.

To avoid overheating parts of the bearings they should never be brought into direct contact with the heat source, but instead should be suspended inside the heating tank or placed on a wire grid.

If heating the bearing with air in a device such as a thermostatic chamber, the bearing can be handled while dry.

For heating the inner rings of NU, NJ or NUP cylindrical and similar type bearings without any ribs or with only a single rib, an induction heater can be used to quickly heat bearings in a dry state **(must demagnetize).**

When heated bearings are installed on shafts, the inner rings must be held against the shaft abutment until the bearing has been cooled in order to prevent clearance between the ring and the abutment face.

As shown in **Fig. 15.6**, a removal pawl, or tool, can also be used to dismount the inner ring when using the induction heating method described above.

15.2.3 Installation of tapered bore bearings

Small type bearings with tapered bores are installed over a tapered shaft, withdrawal sleeves, or adapter sleeves by driving the bearing into place using a locknut. The locknut is tightened using a hammer or impact wrench. (**Fig. 15.7**)

Large size bearings require considerable fitting force and must be installed hydraulically.

In **Fig. 15.8** the fitting surface friction and nut tightening torque needed to install bearings with tapered bores directly onto tapered shafts are decreased by injecting

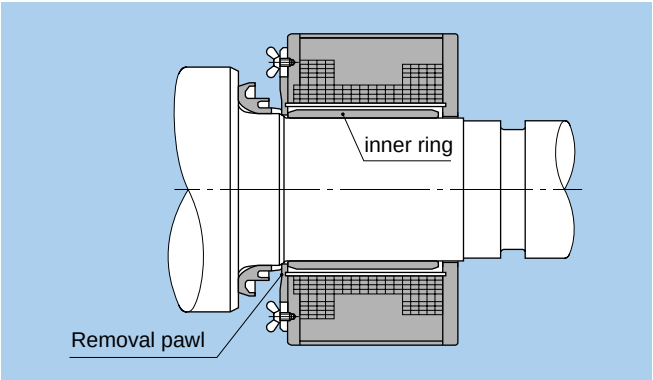

Fig. 15.6 Removal of inner ring using an induction heater

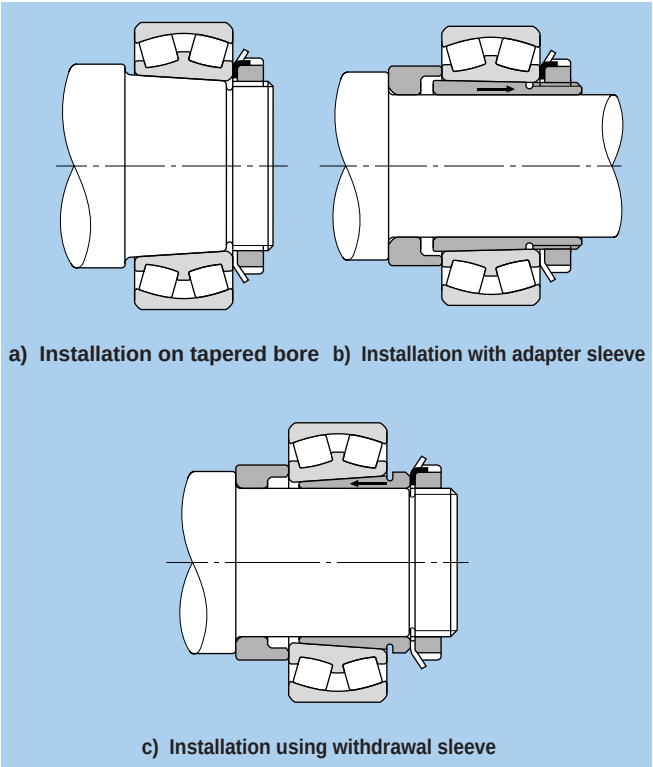

a) Installation on tapered bore b) Installation with adapter sleeve

c) Installation using withdrawal sleeve

Fig. 15.7 Installation methods using locknuts

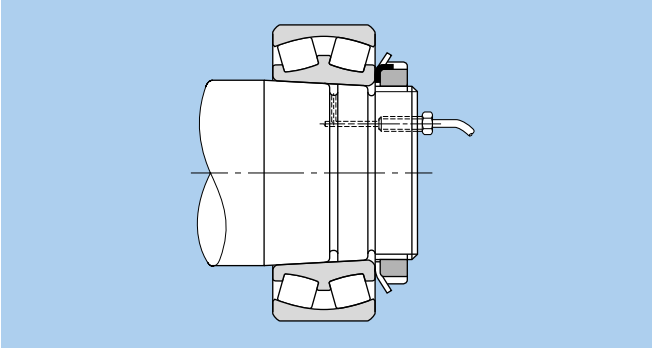

Fig. 15.8 Installation utilizing oil injection

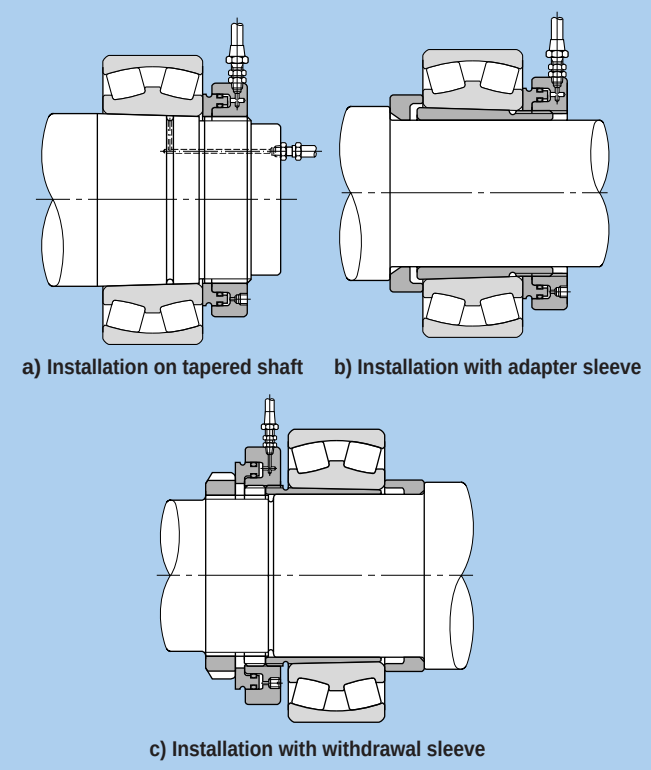

Fig. 15.9 Installation using hydraulic nut

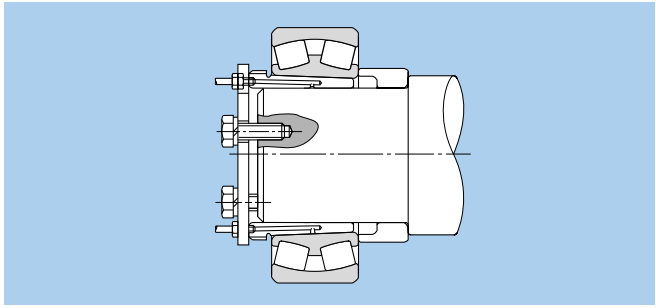

Fig. 15.10 Installation using hydraulic withdrawal sleeve

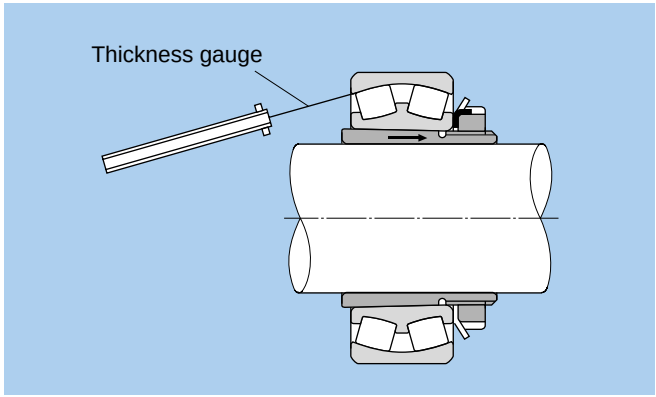

Fig. 15.11 Internal clearance measurement method for spherical roller bearings

high pressure oil between the fitting surfaces.

Fig. 15.9 a) shows one method of installation where a hydraulic nut is used to drive the bearing onto a tapered shaft.

Fig. 15.9 b) and **c**) show installation using a hydraulic nut with adapter sleeves and withdrawal sleeves.

Fig. 15.10 shows an installation method using a hydraulic withdrawal sleeve.

With tapered bore bearings, as the inner ring is driven axially onto the shaft or adapter or withdrawal sleeve, the interference will increase and the bearing internal radial clearance will decrease. Interference can be estimated by measuring decrease in internal radial clearance. As shown in **Fig. 15.11**, the internal radial clearance between the rollers and outer ring of spherical roller bearings should be measured with a thickness gauge under no load while the rollers are held in the correct position. Instead of using the decrease in amount of internal radial clearance to estimate the interference, it is possible to estimate by measuring the distance the bearing has been driven onto the shaft.

For spherical roller bearings, **Table 15.1** indicates the appropriate interference which will be achieved as a result of the internal radial clearance decrease, or the distance the bearing has been driven onto the shaft.

For conditions such as heavy loads, high speeds, or when there is a large temperature differential between the inner and outer rings, etc. which require large interference fits, bearings which have a minimum internal radial clearance of C3 or greater should be used. **Table 15.1** lists the maximum values for internal radial clearance decrease and axial displacement. For these applications, the remaining clearance must be greater than the minimum allowable residual clearance listed in **Table 15.1**.

15.2.4 Installation of outer ring

Even for tight interference fits, the outer rings of small type bearings can be installed by driving them into housings at room temperature. For large interference type bearings, the housing can be heated before installing the bearing, or the bearing's outer ring can be cooled with dry ice, etc. before installing. If dry ice or other cooling agent is used, atmospheric moisture will condense on bearing surfaces, and therefore appropriate rust preventative measures are necessary.

15.3 Internal clearance adjustment

As shown in **Fig. 15.12**, for angular contact ball bearings and tapered roller bearings the desired amount of axial internal clearance can be set at the time of installation by tightening or loosening the adjustment nut.

To adjust the suitable axial internal clearance or amount of bearing preload, the internal clearance can be measured while tightening the adjusting nut as shown in **Fig. 15.13**. Other methods are to check rotation torque by rotating the shaft or housing while adjusting the nut, or to insert shims of the proper thickness as shown in **Fig. 15.14**.

Table 15.1 Installation of tapered bore spherical roller bearings

Units mm

Nominal bearing bore diameter d		Reduction of radial internal clearance		Axial displacement drive up				Minimum allowable residual clearance		
				Taper, 1:12		Taper, 1:30				
over	incl.	Min	Max	Min	Max	Min	Max	CN	C3	C4
30	40	0.02	0.025	0.35	0.4	—	—	0.015	0.025	0.04
40	50	0.025	0.03	0.4	0.45	—	—	0.02	0.03	0.05
50	65	0.03	0.035	0.45	0.6	—	—	0.025	0.035	0.055
65	80	0.04	0.045	0.6	0.7	—	—	0.025	0.04	0.07
80	100	0.045	0.055	0.7	0.8	1.75	2.25	0.035	0.05	0.08
100	120	0.05	0.06	0.75	0.9	1.9	2.25	0.05	0.065	0.1
120	140	0.065	0.075	1.1	1.2	2.75	3	0.055	0.08	0.11
140	160	0.075	0.09	1.2	1.4	3	3.75	0.055	0.09	0.13
160	180	0.08	0.1	1.3	1.6	3.25	4	0.06	0.1	0.15
180	200	0.09	0.11	1.4	1.7	3.5	4.25	0.07	0.1	0.16
200	225	0.1	0.12	1.6	1.9	4	4.75	0.08	0.12	0.18
225	250	0.11	0.13	1.7	2	4.25	5	0.09	0.13	0.2
250	280	0.12	0.15	1.9	2.4	4.75	6	0.1	0.14	0.22
280	315	0.13	0.16	2	2.5	5	6.25	0.11	0.15	0.24
315	355	0.15	0.18	2.4	2.8	6	7	0.12	0.17	0.26
355	400	0.17	0.21	2.6	3.3	6.5	8.25	0.13	0.19	0.29
400	450	0.2	0.24	3.1	3.7	7.75	9.25	0.13	0.2	0.31
450	500	0.21	0.26	3.3	4	8.25	10	0.16	0.23	0.35
500	560	0.24	0.3	3.7	4.6	9.25	11.5	0.17	0.25	0.36
560	630	0.26	0.33	4	5.1	10	12.5	0.2	0.29	0.41
630	710	0.3	0.37	4.6	5.7	11.5	14.5	0.21	0.31	0.45
710	800	0.34	0.43	5.3	6.7	13.3	16.5	0.23	0.35	0.51
800	900	0.37	0.47	5.7	7.3	14.3	18.5	0.27	0.39	0.57
900	1,000	0.41	0.53	6.3	8.2	15.8	20.5	0.3	0.43	0.64
1,000	1,120	0.45	0.58	6.8	8.7	17	22.5	0.32	0.48	0.7
1,120	1,250	0.49	0.63	7.4	9.4	18.5	24.5	0.34	0.54	0.77

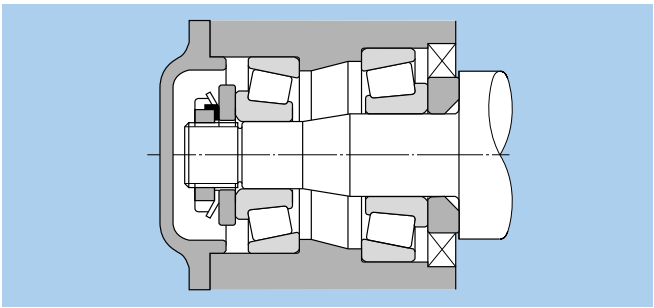

Fig. 15.12 Axial internal clearance adjustment

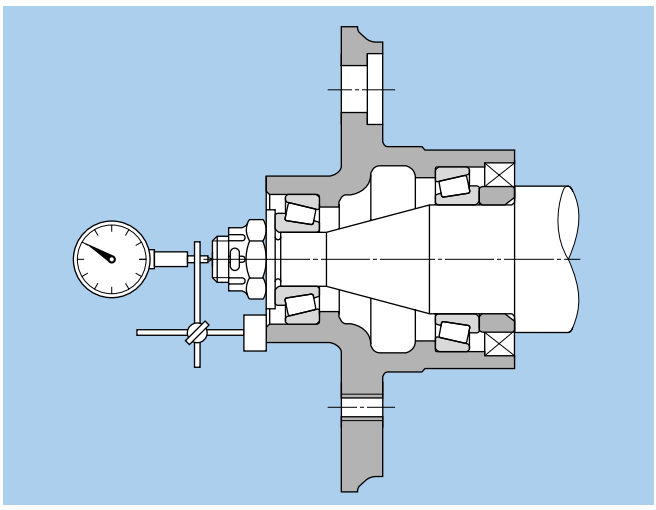

Fig. 15.13 Measurement of axial internal clearance adjustment

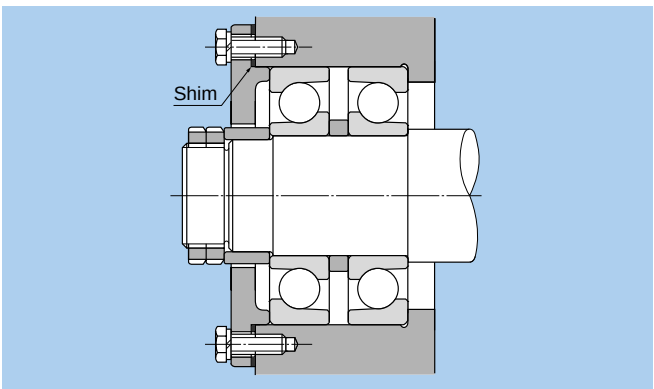

Fig. 15.14 Internal clearance adjustment using shims

15.4 Post installation running test

To insure that the bearing has been properly installed, a running test is performed after installation is completed. The shaft or housing is first rotated by hand and if no problems are observed low speed, no load power test is performed. If no abnormalities are observed, **the load and speed are gradually increased to operating conditions**. **During the test if any unusual noise, vibration, or temperature rise is observed the test should be stopped and examine the equipment. If necessary, the bearing should be disassembled for inspection.**

To check bearing running noise, the sound can be amplified and the type of noise ascertained with a listening instrument placed against the housing. A clear, smooth and continuous running sound is normal. A high, metallic or irregular sound indicates some error in function. Vibration can be accurately checked with a vibration measuring instrument, and the amplitude and frequency characteristics measured guantitatively.

Usually the bearing temperature can be estimated from the housing surface temperature. However, if the bearing outer ring is accessible through oil inlets, etc., the temperature can be more accurately measured.

Under normal conditions, bearing temperature rises with operation time and then reaches a stable operating temperature after a certain period of time. If the temperature does not stable and continues to rise, or if there is a sudden temperature rise, or if the temperature is extremely high, the bearing should be inspected.

15.5 Bearing disassembly

Bearings are often removed as part of periodic inspection procedures or during the replacement of other parts. However, the shaft and housing are almost always reinstalled, and in more than a few cases the bearings themselves are reused. These bearings, shafts, housings, and other related parts must be designed to prevent damage during disassembly procedures, and the proper disassembly tools must be employed. When removing raceways with interference, pulling force should be applied to the raceway only. **Do not remove the raceway through the rolling elements.**

15.5.1 Disassembly of bearings with cylindrical bores

For small type bearings, the pullers shown in **Fig. 15.15 a**) and **b**) or the press method shown in **Fig. 15.16** can be used for disassembly. When used properly, these methods can improve disassembly efficiency and prevent damage to bearings.

To facilitate disassembly procedures, attention should be given to planning the designs of shafts and housings, such as providing extraction grooves on the shaft and housing for puller claws as shown **Figs. 15.17** and **15.18**. Threaded bolt holes should also be provided in housings to facilitate the pressing out of outer rings as shown in **Fig. 15.19**.

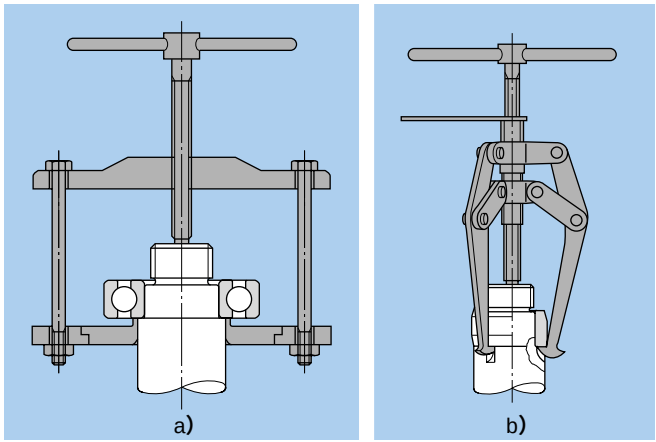

Fig. 15.15 Puller disassembly

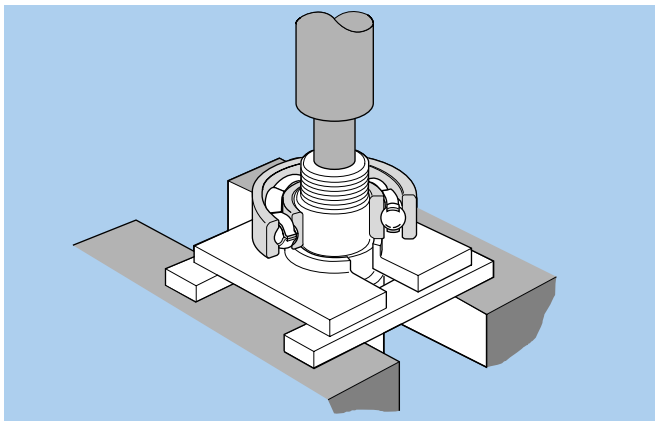

Fig. 15.16 Press disassembly

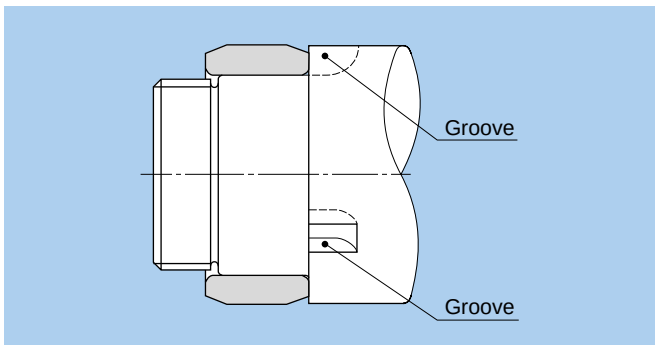

Fig. 15.17 Extracting grooves

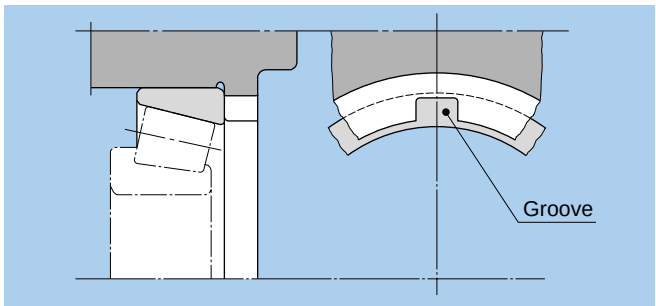

Fig. 15.18 Extraction groove for outer ring disassembly

Large bearings, installed with tight fits, and having been in service for a long period of time, will likely have developed fretting corrosion on fitting surfaces and will require considerable dismounting force. In such instances, dismounting friction can be reduced by injecting oil under high pressure between the shaft and inner ring surfaces as shown in **Fig. 15.20**.

For NU, NJ and NUP type cylindrical roller bearings, the induction heating unit shown in **Fig. 15.6** can be used to facilitate removal of the inner ring by means of thermal expansion. This method is highly efficient for frequent disassembly of bearings with identical dimensions.

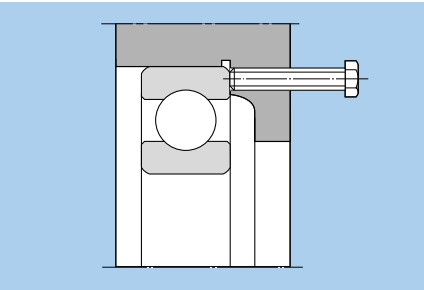

Fig. 15.19 Outer ring disassembly bolt

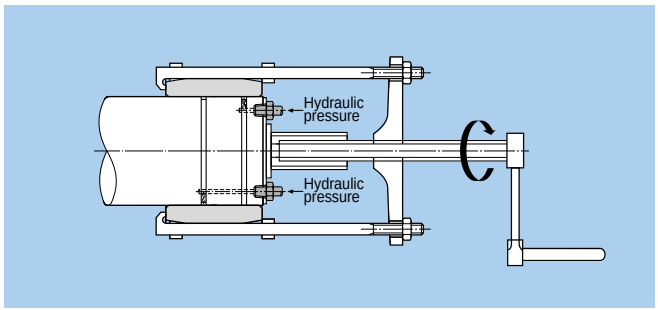

Fig. 15.20 Removal by hydraulic pressure

15.5.2 Disassembly of bearings with tapered bores

Small bearings installed using an adapter are removed by loosening the locknut, placing a block on the edge of the inner ring as shown in **Fig. 15.21**, and tapping with a hammer. Bearings which have been installed with withdrawal sleeves can be disassembled by tightening down the lock nut as shown in **Fig. 15.22**.

For large type bearings on tapered shafts, adapters, or withdrawal sleeves, disassembly is greatly facilitated by hydraulic methods. **Fig. 15.23** shows the case where the bearing is removed by applying hydraulic pressure on the fitting surface of a bearing installed on a tapered shaft.

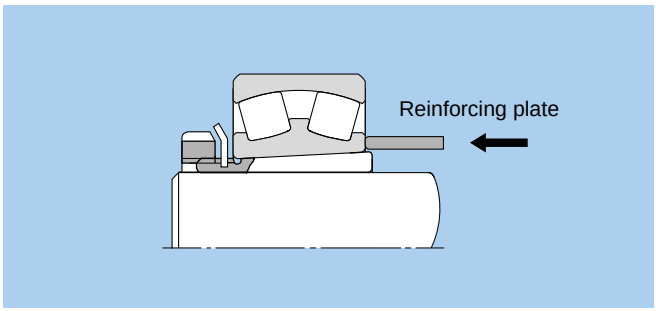

Fig. 15.21 Disassembly of bearing with adapter

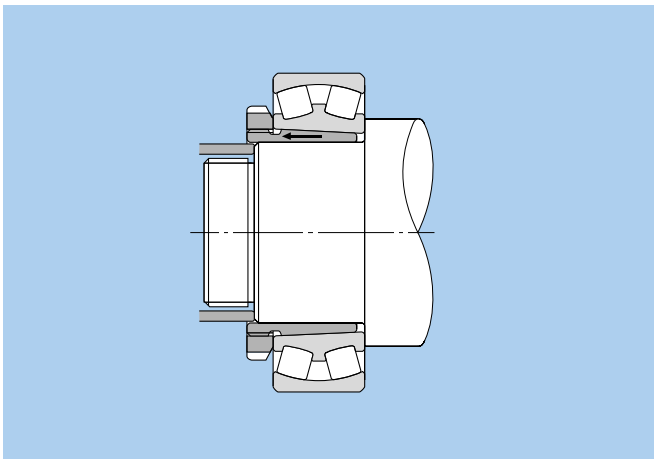

Fig. 15.22 Disassembly of bearing with withdrawal sleeve

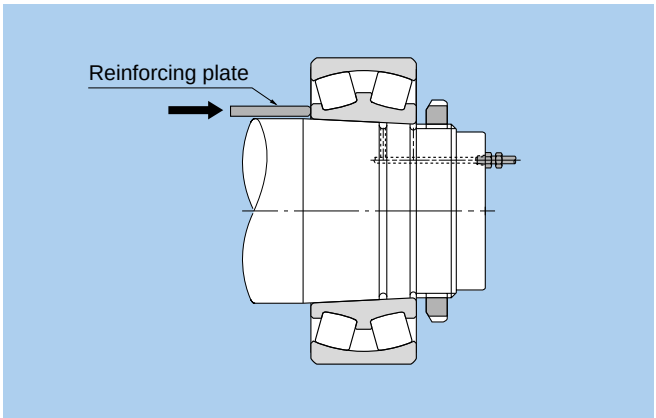

Fig. 15.23 Removal of bearing by hydraulic pressure

Fig. 15.24 shows two methods of disassembling bearings with adapters or withdrawal sleeves using a hydraulic nut. **Fig. 15.25** shows a disassembly method using a hydraulic withdrawal sleeve where high pressure oil is injected between fitting surfaces and a nut is then employed to remove the sleeve.

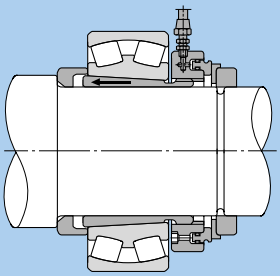

a) Disassembly of adapter sleeve

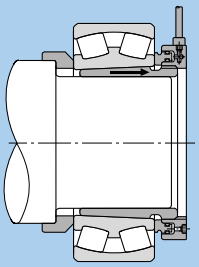

b) Disassembly of withdrawal sleeve

fig. 15.24 Disassembly using hydraulic nut

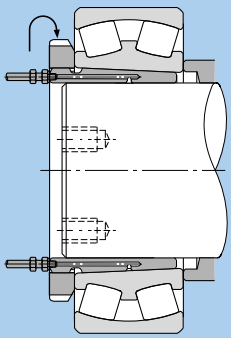

Fig. 15.25 Disassembly using hydraulic withdrawal sleeve

15.6 Bearing maintenance and inspection

In order to get the use the bearing to its full potential and keep it in good working condition as long as possible, maintenance and inspections should be performed. Doing so will enable early detection of any problems with the bearing.

This will enable you to prevent bearing failure before it happens, and will enhance productivity and cost performance.

The following measures are often taken as a general method of maintaining and managing bearings.

Maintenance management requires inspection items and frequency for performing routine inspections be determined according to the importance of the device or machine.

15.6.1 Inspection of machine while running

The interval for replenishing and replacing lubricant is determined by a study of lubricant nature and checking the bearing temperature, noise and vibration.

15.6.2 Observation of bearing after use

Take note of any problem that may appear after the bearing is used or when performing routine inspections, and take measures for preventing reoccurrence of any damage discovered. For types of bearing damage and countermeasures for preventing damage, see section 16.

16. Bearing Damage and Corrective Measures

If handled correctly, bearings can generally be used for a long time before reaching their fatigue life. If damage occurs prematurely, the problem could stem from improper bearing selection, handling or lubrication. In this occurs, take note of the type of machine on which the bearings is used, the place where it is mounted, service conditions and surrounding structure. By investigating several possible causes surmised from the type of damage and condition at the time the damage occurred, it is possible to prevent the same kind of damage from reoccurring. **Table 16.1** gives the main causes of bearing damage and remedies for correcting the problem.

Table 16.1 Bearing damage, main causes of bearing damage and remedies for correcting the problem

	Description		
Flaking	Surface of the raceway and rolling elements peels away in flakes Conspicuous hills and valleys form soon afterward. 	Causes	● Excessive load, fatigue life, improper handling ● Improper mounting. ● Improper precision in the shaft or housing. ● Insufficient clearance. ● Contamination. ● Rust. ● Improper lubrication ● Drop in hardness due to abnormally high temperatures.
		Correction	● Select a different type of bearing. ● Reevaluate the clearance. ● Improve the precision of the shaft and housing. ● Review application conditions. ● Improve assembly method and handling. ● Reevaluate the layout (design) of the area around the bearing. ● Review lubricant type and lubrication methods.
Seizure	The bearing heats up and becomes discolored. Eventually the bearing will seize up. 	Causes	● Insufficient clearance (including clearances made smaller by local deformation). ● Insufficient lubrication or improper lubricant. ● Excessive loads (excessive preload). ● Skewed rollers. ● Reduction in hardness due to abnormal temperature rise
		Correction	● Riview lubricant type and quantity. ● Check for proper clearance. (Increase clearances.) ● Take steps to prevent misalignment. ● Review application conditions. ● Improve assembly method and handling.
Cracking and notching	Localized flaking occurs. Little cracks or notches appear. 	Causes	● Excessive shock loads. ● Improper handling (use of steel hammer, cutting by large particles of foreign matter) ● Formation of decomposed surface layer due to improper lubrication ● Excessive interference. ● Large flaking. ● Friction cracking. ● Imprecision of mounting mate (oversized fillet radius)
		Correction	● Review lubricant (friction crack prevention). ● Select proper interference and review materials. ● Review service conditions. ● Improve assembly procedures and take more care in handling.

Table 16.1 Bearing damage, main causes of bearing damage and remedies for correcting the problem

Description		
Cage damage	Rivets break or become loose resulting in cage damage. 	**Causes** ● Excessive moment loading. ● High speed or excessive speed fluctuations. ● Inadequate lubrication. ● Impact with foreign objects. ● Excessive vibration. ● Improper mounting. (Mounted misaligned) **Correction** ● Reevaluation of lubrication conditions. ● Review of cage type selection. ● Investigate shaft and housing rigidity. ● Review service conditions. ● Improve assembly method and handling.
Rolling path skewing	Abrasion or an irregular, rolling path skewing left by rolling elements along raceway surfaces. 	**Causes** ● Shaft or housing of insufficient accuracy. ● Improper installation. ● Insufficient shaft or housing rigidity. ● Shaft whirling caused by excessive internal bearing clearances. **Correction** ● Reinspect bearing's internal clearances. ● Review accuracy of shaft and housing finish. ● Review rigidity of shaft and housing.
Smearing and scuffing	The surface becomes rough and some small deposits form. Scuffing generally refers to roughness on the race collar and the ends of the rollers. 	**Causes** ● Inadequate lubrication. ● Entrapped foreign particles. ● Roller skewing due to a misaligned bearing. ● Bare spots in the collar oil film due to large axial loading. ● Surface roughness. ● Excessive slippage of the rolling elements. **Correction** ● Reevaluation of the lubricant type and lubrication method. ● Bolster sealing performance. ● Review preload. ● Review service conditions. ● Improve assembly method and handling
Rust and corrosion	The surface becomes either partially or fully rusted, and occasionally rust even occurs along the rolling element pitch lines. 	**Causes** ● Poor storage conditions. ● Poor packaging. ● Insufficient rust inhibitor. ● Penetration by water, acid, etc. ● Handling with bare hands. **Correction** ● Take measures to prevent rusting while in storage. ● Periodically inspect the lubricating oil. ● Improve sealing performance. ● Improve assembly method and handling.

Table 16.1 Bearing damage, main causes of bearing damage and remedies for correcting the problem

	Description		
Fretting	There are two types of fretting. In one, a rusty wear powder forms on the mating surfaces. In the other, brinelling indentations form on the raceway at the rolling element pitch.	Causes	● Insufficient interference. ● Small bearing oscillation angle. ● Insufficient lubrication.(unlubricated) ● Fluctuating loads. ● Vibration during transport, vibration while stopped.
		Correction	● Select a different kind of bearing. ● Select a different type of lubricant. ● Review the interference and apply a coat of lubricant to fitting surface. ● Pack the inner and outer rings separately for transport.
Wear	The surfaces wear and dimensional deformation results. Wear is often accompanied by roughness and scratches.	Causes	● Entrapment of foreign particles in the lubricant. ● Inadequate lubrication. ● Skewed rollers.
		Correction	● Review lubricant type and lubrication methods. ● Improve sealing performance. ● Take steps to prevent misalignment.
Electrolytic corrosion	Pits form on the raceway. The pits gradually grow into ripples.	Causes	● Electric current flowing through the rollers.
		Correction	● Create a bypass circuit for the current. ● Insulate the bearing.
Dents and scratches	Scoring during assembly, gouges due to hard foreign objects, and surface denting due to mechanical shock.	Causes	● Entrapment of foreign objects. ● Bite-in on the flaked-off side. ● Dropping or other mechanical shocks due to careless handling. ● Assembled misaligned.
		Correction	● Improve handling and assembly methods. ● Bolster sealing performance. (measures for preventing foreign matter from getting in) ● Check area surrounding bearing. (when caused by metal fragments)

Table 16.1 Bearing damage, main causes of bearing damage and remedies for correcting the problem

Description		
Creeping	Surface becomes mirrored by sliding of inside and outside diameter surfaces. May by accompanied by discoloration or score. 	**Causes** ● Insufficient interference in the mating section. ● Sleeve not fastened down properly. ● Abnormal temperature rise. ● Excessive loads. **Correction** ● Reevaluate the interference. ● Reevaluate usage conditions. ● Review the precision of the shaft and housing. ● Raceway end panel scuffing
Speckles and discoloration	Luster of raceway surfaces is gone; surface is matted, rough, and / or evenly dimpled. Surface covered with minute dents. 	**Causes** ● Infiltration of bearing by foreign matter. ● Insufficient lubrication. **Correction** ● Reevaluation of lubricant type and lubrication method. ● Review sealing mechanisms. ● Examine lubrication oil purity. (filter may be excessively dirty, etc.)
Peeling	Patches of minute flaking or peeling (size, approx. 10 μm). Innumerable hair-line cracks visible though not yet peeling. (This type of damage frequently seen on roller bearings.) 	**Causes** ● Infiltration of bearing by foreign matter. ● Insufficient lubrication. **Correction** ● Reevaluation of lubricant type and lubrication method. ● Improve sealing performance. (to prevent infiltration of foreign matter) ● Take care to operate smoothly.

17. Technical data

17.1 Deep groove ball bearing radial internal clearances and axial internal clearances

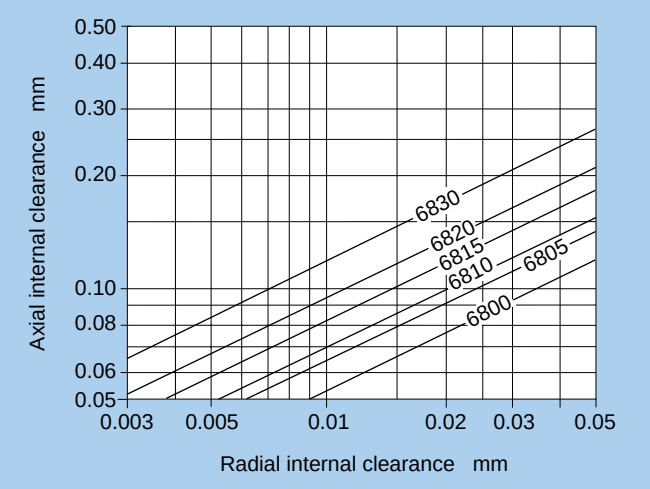

Fig. 17.1.1 Series 68 radial internal/axial internal clearances

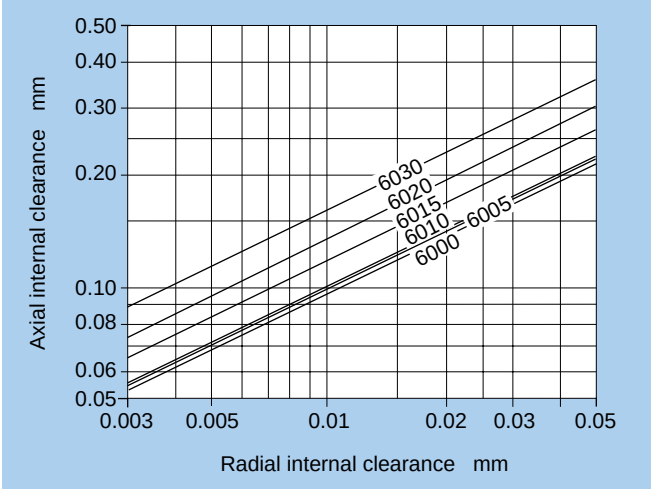

Fig. 17.1.3 Series 60 radial internal/axial internal clearances

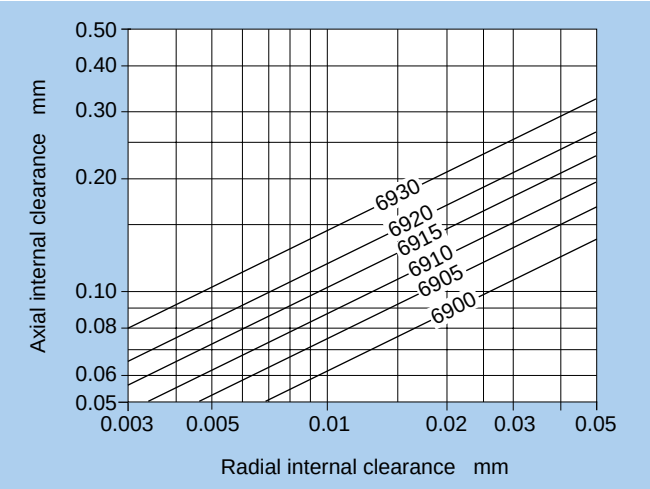

Fig. 17.1.2 Series 69 radial internal/axial internal clearances

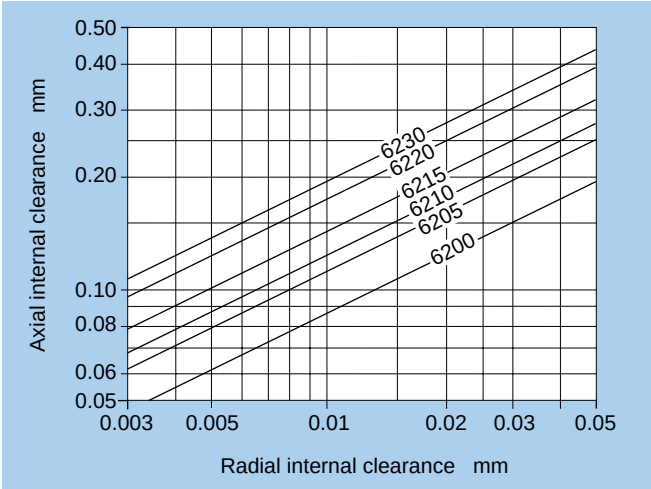

Fig. 17.1.4 Series 62 radial internal/axial internal clearances

17.2 Angular contact ball bearing axial load and axial displacement

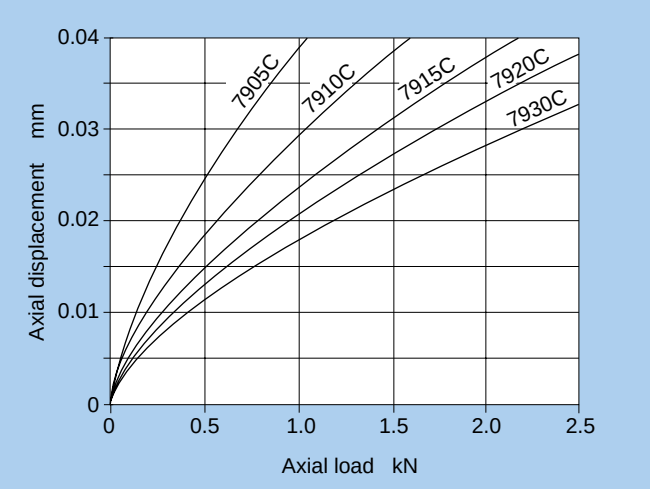

Fig. 17.2.1 Series 79 C axial load and axial displacement

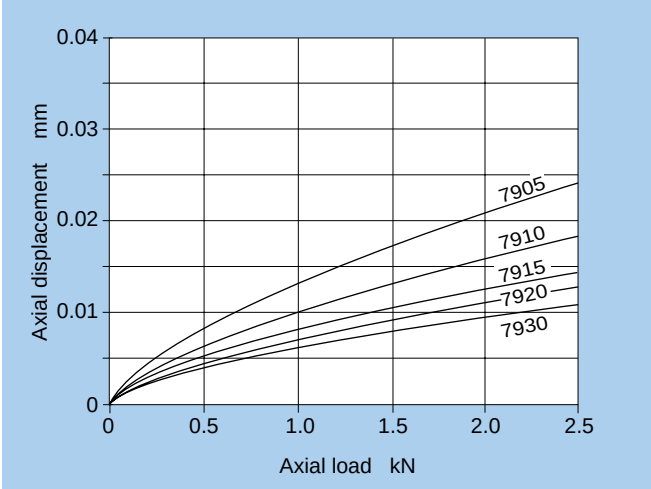

Fig. 17.2.2 Series 79 axial load and axial displacement

※This data is based on typical dimensions. NTN do not guarantee at this data.

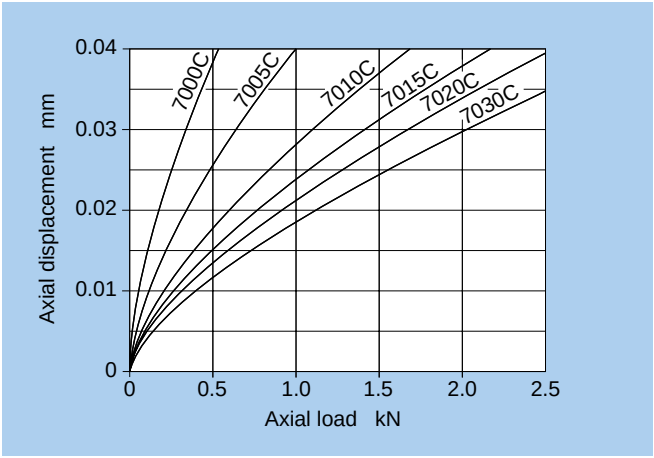

Fig. 17.2.3 Series 70 C axial load and axial displacement

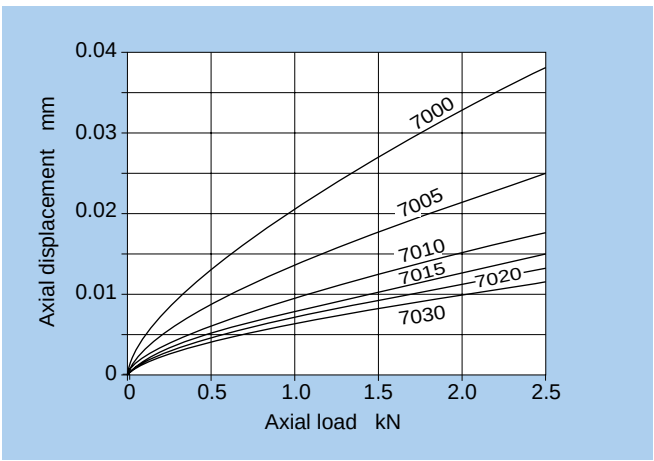

Fig. 17.2.4 Series 70 axial load and axial displacement

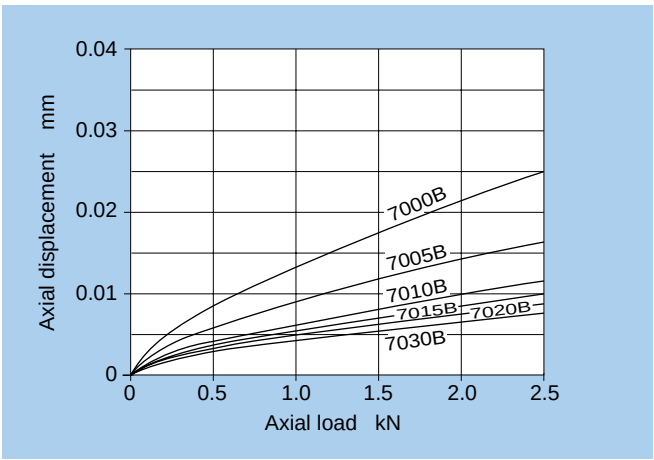

Fig. 17.2.5 Series 70 B axial load and axial displacement

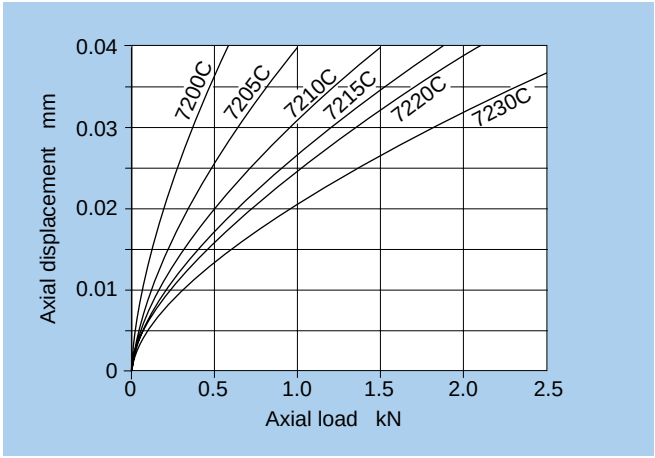

Fig. 17.2.6 Series 72 C axial load and axial displacement

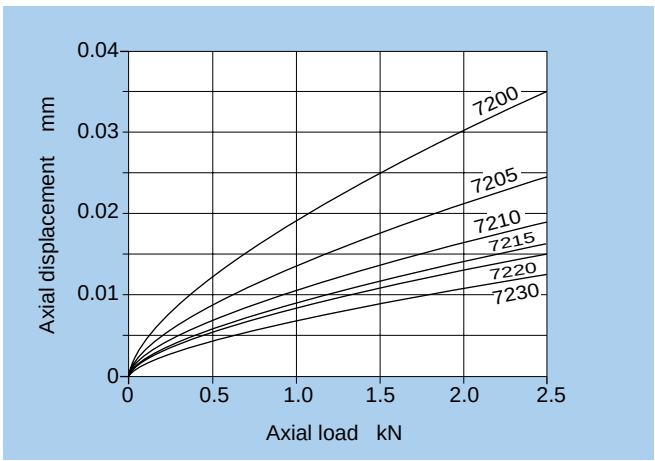

Fig. 17.2.7 Series 72 axial load and axial displacement

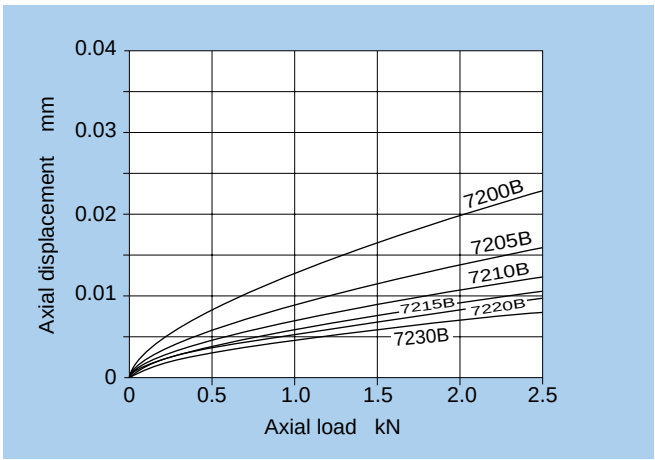

Fig. 17.2.8 Series 72 B axial load and axial displacement

17.3 Tapered roller bearing axial load and axial displacement

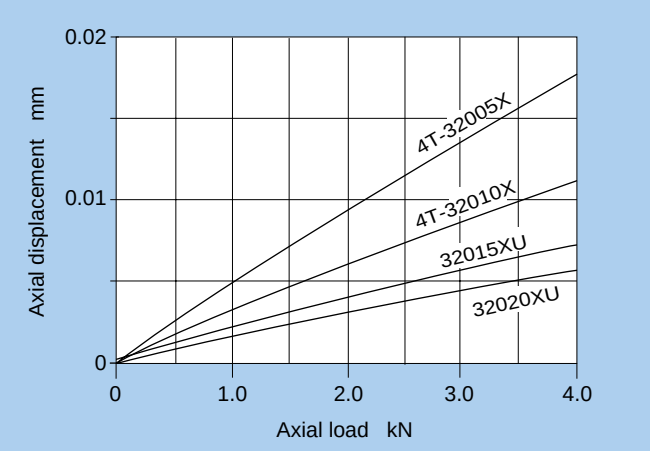

FIg. 17.3.1 Series 320 axial load and axial displacement

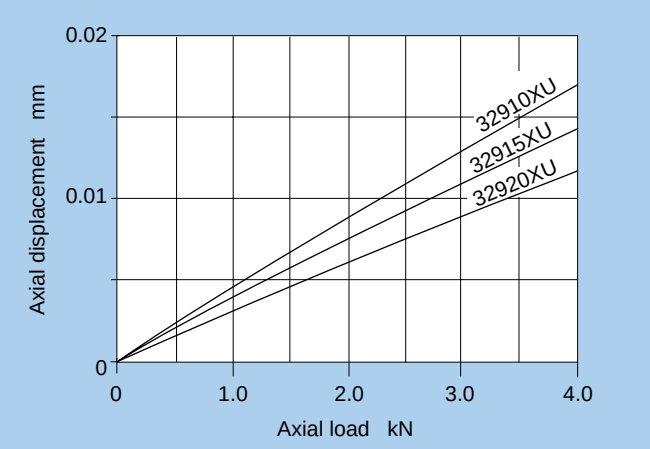

Fig. 17.3.2 Series 329 axial load and axial displacement

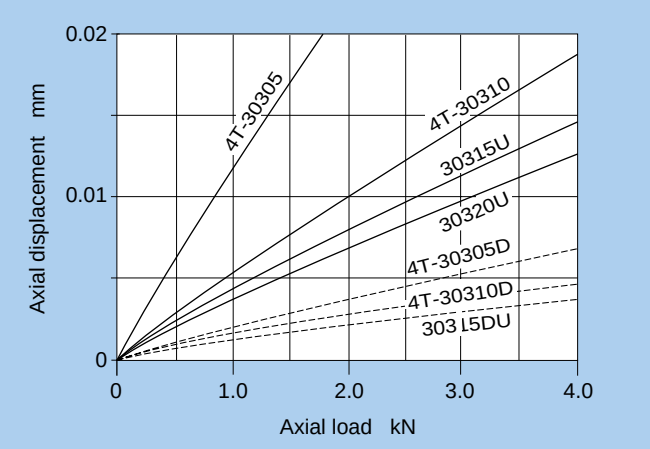

FIg. 17.3.3 Series 303/303 D axial load and axial displacement

Note: Values when bearing and housing are rigid bodies.
Axial displacement may become large depending on shape of shaft/housing and fitting conditions.

17.4 Allowable axial load for ball bearings

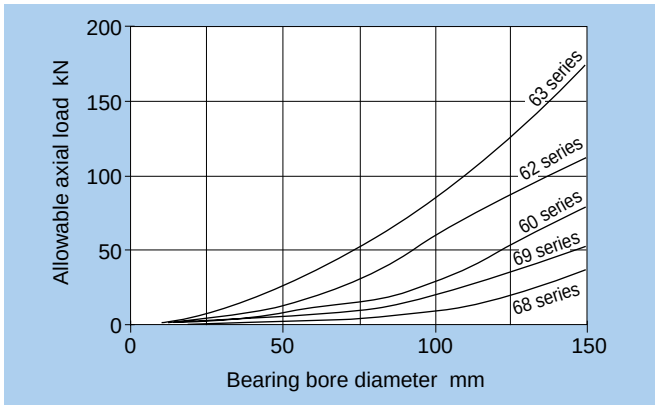

Fig. 17.4.1 Allowable axial load for deep groove ball bearings

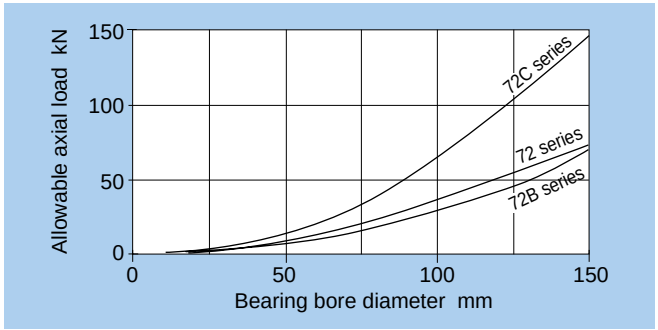

Fig. 17.4.2 Allowable axial load for angular contact ball bearings (72, 72B, 72C series)

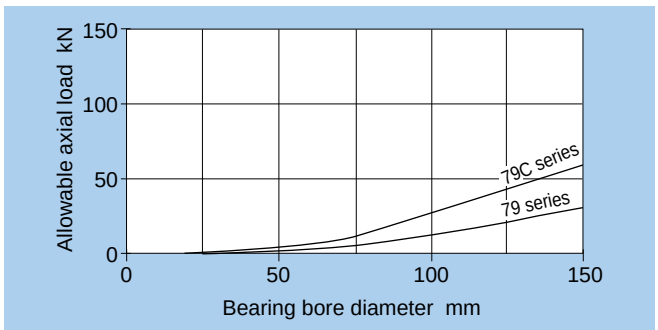

Fig. 17.4.3 Allowable axial load for angular contact ball bearings (79, 79C series)

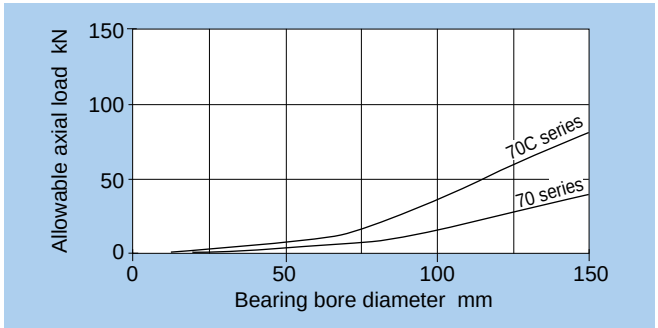

Fig. 17.4.4 Allowable axial load for angular contact ball bearings (70, 70C series)

Note: When an axial load acts upon deep groove or angular contact ball bearings, allowable axial load is the load whereby the contact ellipse exceeds the shoulder of the raceway.

17.5 Fitting surface pressure

Table 17.5.1 lists equations for calculating the pressure and maximum stress between fitting surfaces.

Table 17.5.2 can be used to determine the approximate average groove diameter for bearing inner and outer rings.

The effective interference, in other words the actual interference Δ_{deff} after fitting, is smaller than the apparent interference Δd derived from the measured valued for the bearing bore diameter and shaft. This difference is due to the roughness or variations of the finished surfaces to be fitted, and therefore it is necessary to assume the following reductions in effective interference:

For ground shafts: 1.0 ～ 2.5 μm
For lathed shafts : 5.0 ～ 7.0 μm

Table 17.5.1 Fitting surface pressure and maximum stress

Fit conditions		Equation	Codes (units: N{kgf}, mm)
Fitting surface pressure MPa {kgf / mm²}	Solid steel shaft/ inner ring fit	$P = \frac{E}{2} \frac{\Delta_{deff}}{d} \left\{ 1 - \left(\frac{d}{D_i} \right)^2 \right\}$	d : Shaft diameter, inner ring bore diameter d_o : Hollow shaft inner diameter D_i : Inner ring average groove diameter Δ_{deff} : Effective interference E : Elasticity factor = 208,000 MPa {21,200 kgf / mm²}
	Hollow steel shaft/ inner ring fit	$P = \frac{E}{2} \frac{\Delta_{deff}}{\Delta_d} \frac{[1-(d/D_i)^2]\,[1-(d_o/d)^2]}{[1-(d_o/D_i)^2]}$	
	Steel housing/ outer ring fit	$P = \frac{E}{2} \frac{\Delta_{Deff}}{D} \frac{[1-(D_o/D)^2]\,[1-(D/D_h)^2]}{[1-(D_o/D_h)^2]}$	D : Housing inner diameter, bearing outer diameter D_o : Outer ring average groove diameter D_h : Housing outer diameter Δ_{Deff} : Effective interference
Maximum stress MPa {kgf / mm²}	Shaft / inner ring fit	$\sigma_t \max = P \frac{1+(d/D_i)^2}{1-(d/D_i)^2}$	Inner ring bore diameter face maximum tangential stress
	Housing/ outer ring fit	$\sigma_t \max = P \frac{2}{1-(D_o/D)^2}$	Outer ring inner diameter face maximum tangential stress

Table 17.5.2 Average groove diameter (approximate expression)

Bearing type		Average groove diameter	
		Inner ring (D_i)	Outer ring (D_o)
Deep groove ball bearings	All types	$1.05 \frac{4d+D}{5}$	$0.95 \frac{d+4D}{5}$
Cylindrical roller bearings❶	All types	$1.05 \frac{3d+D}{4}$	$0.98 \frac{d+3D}{4}$
Spherical roller bearings	All types	$\frac{2d+D}{3}$	$0.97 \frac{d+4D}{5}$

d: Inner ring bore diameter mm D: Outer ring outer diameter mm
❶ Average groove diameter values shown for double-flange type.

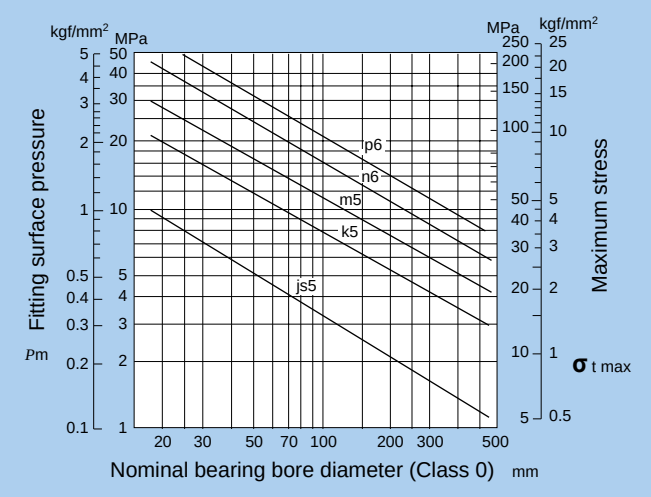

Fig. 17.5.1 Average fit interference as it relates to surface pressure P_m and max. stress $\sigma_{t\,max}$

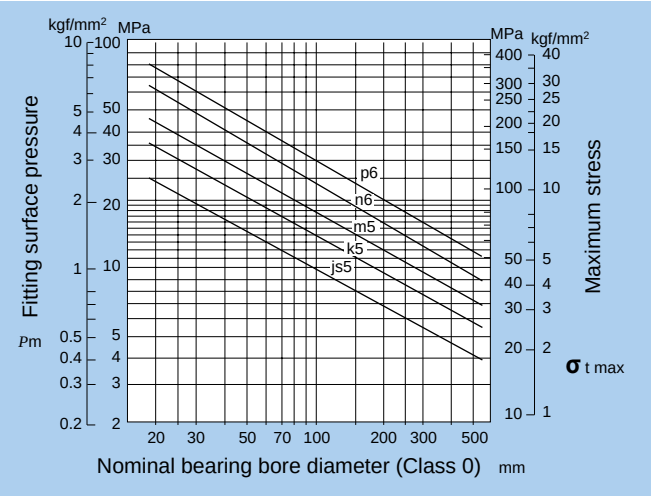

Fig. 17.5.2 Maximum fit interference as it relates to surface pressure P_m and max. stress $\sigma_{t\,max}$

❶ For recommended fitting, see page A-50.

17.6 Necessary press fit and pullout force

Equations (17.1) and (17.2) below can be used to calculate the necessary pullout force for press fit for inner rings and shafts or outer rings and housings.

For shaft and inner rings:

$$K_d = \mu \cdot P \cdot \pi \cdot d \cdot B \quad \cdots\cdots\cdots\cdots\cdots\cdots\cdots\cdots (17.1)$$

For housing and outer rings:

$$K_D = \mu \cdot P \cdot \pi \cdot D \cdot B \quad \cdots\cdots\cdots\cdots\cdots\cdots\cdots\cdots (17.2)$$

Where,

K_d : Inner ring press fit or pullout force N {kgf}
K_D : Outer ring press fit or pullout force N {kgf}
P : Fitting surface pressure MPa {kgf/mm²}
(Refer to **Table 17.5.1**)
d : Shaft diameter, inner ring bore diameter mm
D : Housing inner diameter, outer ring outer diameter mm
B : Inner or outer ring width
μ : Sliding friction coefficient (Refer to **Table 17.6.1**)

Table 17.6.1 Press fit and pullout sliding friction coefficient

Type	μ
Inner (outer) ring press fit onto cylindrical shaft (bore)	0.12
Inner (outer) ring pullout from cylindrical shaft (bore)	0.18
Inner ring press fit onto tapered shaft or sleeve	0.17
Inner ring pullout from tapered shaft	0.14
Sleeve press fit onto shaft/bearing	0.30
Sleeve pullout from shaft/bearing	0.33

Ball and Roller Bearings

INDEX OF BEARING TABLES

Deep Groove Ball Bearings ····· B-5

Deep groove ball bearings 67,68,69,160,60,62,63,64 ····· B-8

Expansion compensating bearings EC-60,EC-62,EC-63 ····· B-26

AC bearings AC-60, AC-A2, AC-63 ····· B-28

Miniature and Extra Small Ball Bearings ····· B-31

Metric series 67,68,69,60,62,63,BC ····· B-34

Inch series R,RA ····· B-38

With ring grooves, snap rings SC ····· B-40

Angular Contact Ball Bearings ····· B-43

Single and duplex angular contact ball bearings 79,70,72,72B,73,73B ····· B-46

High speed single and duplex angular contact ball bearings 78C,79C,70C,72C,73C ····· B-58

Ultra-high speed angular contact ball bearings BNT0,BNT2,HSB9C,HSB0C ····· B-66

Ceramic ball angular contact ball bearings 5S-BNT,5S-HSB ····· B-70

Four-point contact ball bearings QJ2,QJ3 ····· B-72

Double row angular contact ball bearings 52,53 ····· B-74

Self-Aligning Ball Bearings ····· B-79

12(K), 22(K), 13(K), 23(K) ····· B-80

Adapters for self-aligning ball bearings ····· B-86

Cylindrical Roller Bearings ····· B-91

NU,NJ,NUP,N,NF10,2,22,3,23,4 ····· B-94

L type loose rib HJ2,22,3,23,4 ····· B-112

Double row cylindrical roller bearings NN49(K),NNU49(K),NN30(K),NNU30(K) ····· B-116

Four-row cylindrical roller bearings 4R ····· B-122

Tapered Roller Bearings ····· B-133
Metric series 329X,320X,330,331,302,322,322C,332,303,303D,313X,323,323C ····· B-142
Inch series ····· B-160
Double row tapered roller bearings (back-to-back arrangement)
4130,4230,4131,4231,4302,4322,4303,4303D,4323 ····· B-198
Double row tapered roller bearings (face-to-face arrangement) 3230,3231 ····· B-212
Four-row tapered roller bearings CR0 ····· B-216

Spherical Roller Bearings ····· B-233
239(K),230(K),240(K30),231(K),241(K30),222(K),232(K),213(K),223(K) ····· B-236
Adapters for spherical roller bearings ····· B-256
Withdrawal sleeves for spherical roller bearings ····· B-261

Thrust Bearings ····· B-269
Single direction thrust ball bearings 511,512,513,514 ····· B-274
Double row angular contact thrust ball bearings 5629(M),5620(M) ····· B-278
High speed duplex angular contact thrust ball bearings HTA9DB,HTA0DB ····· B-282
Spherical roller thrust bearings 292,293,294 ····· B-286

JAPAN GC
NTN
JAPAN DE
NTN
JAPAN RU
NTN

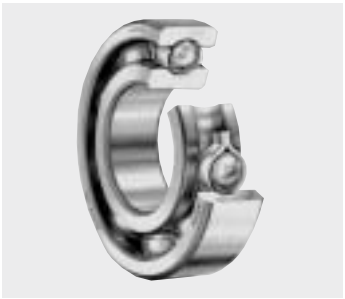
Open type

Shielded type

Sealed type (non-contact)

Expansion Compensating Bearing

1. Design features and special characteristics

Deep groove ball bearings are very widely used. A deep groove is formed on each inner and outer ring of the bearing enabling them to sustain radial and axial loads in either direction as well as well as the complex loads which result from the combination of these forces. Deep groove ball bearings are suitable for high speed applications.

In addition to unsealed bearings, deep groove ball bearings include ball bearings with greased sealed inside (sealed or shielded) and bearings with a snap ring that simplify structure around the bearing and design.

Table 1 shows the construction and special characteristics of various sealed deep groove ball bearings.

Table 1 Sealed ball bearings: construction and characteristics

Type, code no.		Shielded type	Sealed type		
		Non-contact type ZZ	Non-contact type LLB	Contact type LLU	Low torque type LLH
Construction		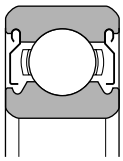	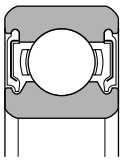	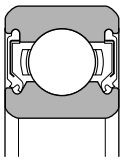	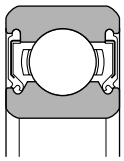
		● Metal shield plate is affixed to outside ring; inner ring incorporates a V-groove and labyrinth clearance.	● Outer ring incorporates synthetic rubber molded to a steel plate; seal edge is aligned with V-groove along inner ring surface with labyrinth clearance.	● Outer ring incorporates synthetic rubber molded to a steel plate; seal edge contacts V-groove along inner ring surface.	● Basic construction the same as LU type, but specially designed lip on edge of seal prevents penetration by foreign matter; low torque construction.
Performance comparison	Torque	Low	Low	Rather high	Medium
	Dust proofing	Very good	Better than ZZ-type	Excellent	Much better than LLB-type
	Water proofing	Poor	Poor	Very good	Very good
	High speed capacity	Same as open type	Same as open type	Limited by contact seals	Much better than LLU-type
	Allowable temp.range ❶	Depends on lubricant	-25 ℃～120 ℃	-25 ℃～110 ℃	-25 ℃～120 ℃

❶ Please consult NTN Engineering about applications which exceed the allowable temperature range of products listed on this table.
Note : This chart lists double shielded and double sealed bearings, but single shielded (Z) and single sealed (LB, LU, LH) are also available.
Grease lubrication should be used with single shielded and single sealed bearings.

2. Standard cage types

As shown in **Table 2**, pressed cages are generally used in deep groove ball bearings. Machined cages are however used for large bearings and high-speed bearings.

Table 2 Standard cage for deep groove ball bearings

Bearing series	Pressed cages	Machined cages
67	6700～ 6706	—
68	6800～ 6834	6836～ 68／600
69	6900～ 6934	6936～ 69／500
160	16001～16052	16056～ 16072
60	6000～ 6052	6056～ 6084
62	6200～ 6244	—
63	6300～ 6344	—
64	6403～ 6416	—

3. Other bearing types

3. 1 Bearings with snap rings

Some bearings accommodate a snap ring which is attached along the outer diameter of the outer ring. By using snap rings, positioning in the axial direction is possible and housing installation is simplified. In addition to open type, shielded and sealed types are also manufactured. Consult NTN Engineering.

3. 2 Expansion compensating bearings (creep prevention bearings)

The boundary dimensions of expansion compensating deep groove ball bearings are the same as for standard bearings, but formed high polymer material with a high expansion rate is provided in the grooves on the outer circumference of the outer ring (see **Diagram 1**) .

Due to the extremely small difference of thermal expansion attained between the fitted surfaces of the high polymer equipped outer ring and the light alloy bearing housing, a good interference fit can be achieved with stable performance across a wide temperature range. Another advantage is a large reduction in the occurrence of outer ring creeping.

(1) Allowable load

Maximum allowable load C_p (refer to the table of boundary dimensions) has been determined in accordance with outer ring strength; therefore, **it is necessary to select a bearing with a maximum allowable load greater than the largest anticipated bearing load.**

(2) Housing and bearing fit

Table 3 shows the recommended fits for bearings with light metal alloy housings.

In cases where the bearing is going to be interference fit with the housing, it is very important not to damage the high polymer material. Therefore it is essential that the lip of the housing diameter be given a 10˚–15˚ chamfer as shown in **Diagram 2**.

Furthermore, as shown in **Diagram 2**, it is also advisable to apply the interference fit using a press in order not force the bearing into the housing in a misaligned position. (**Diagram 2**)

(3) Radial internal clearance

Regulations for radial internal clearance are the same as those for standard deep groove ball bearings. For standard fit and application conditions, a C3 clearance is used with

Table 3 Recommended fits for outer ring and housing bore

Conditions		Suitable bearing	Housing bore tolerance class
Load type, etc.	Housing material		
Rotating outer ring load Rotating inner ring load; light load Direction indeterminate load; ordinary load	Al alloy Mg alloy Other light alloys	Deep groove ball bearing Cylindrical roller bearing	H6
Rotating outer ring load; heavy load Direction indeterminate load; shock load	Al alloy Mg alloy Other light alloys	Thick-walled type deep groove ball bearing	N6

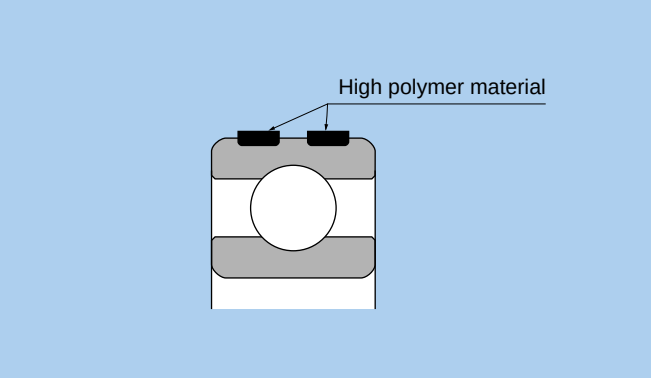

Diagram 1. Expansion compensating bearings

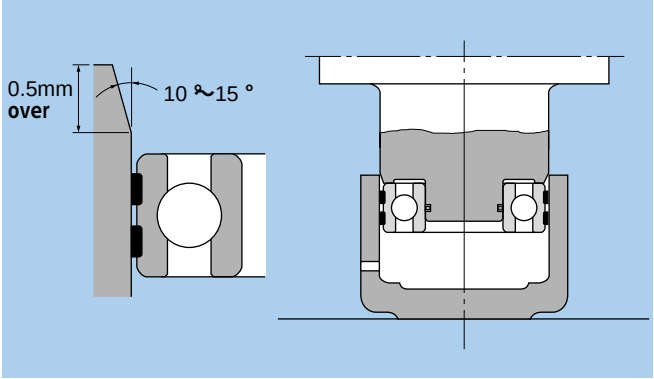

Diagram 2. Fitting method and housing inner diameter chamfer

this bearing.

For more detailed information concerning this bearing and the availability of roller bearings contact NTN Engineering.

(4) Allowable temperature range

-20～120˚C

3.3 Long-life bearings (TMB/TAB bearings)

Boundary dimensions of long-life bearings are the same as those of standard deep groove ball bearings, but the bearings have undergone special heat treatment that considerably extends wear life.

These bearings are especially effective in countering reduced wear life due to the effects of infiltration by dust and other foreign matter.

Features are as follows:

- Rated load is the same as standard bearings, but shaft characteristics factor is a_2 = 2.2 for TMB bearings and a_2 = 3.6 for TAB.
- TMB 62 series bearings can be used in place of standard 63 series bearings enabling lighter weight, more compact designs
- Greater resistance to reduced wear life due to infiltration by dust and other foreign matter

Dimensions for these bearings are not provided in the dimensions table. For details, please contact NTN Engineering.

3.4 AC bearings (creep prevention bearings)

AC bearings have the same boundary dimensions as standard bearings with the addition of two O-rings imbedded in the outside circumference of the outer ring. (**Diagram 3**)

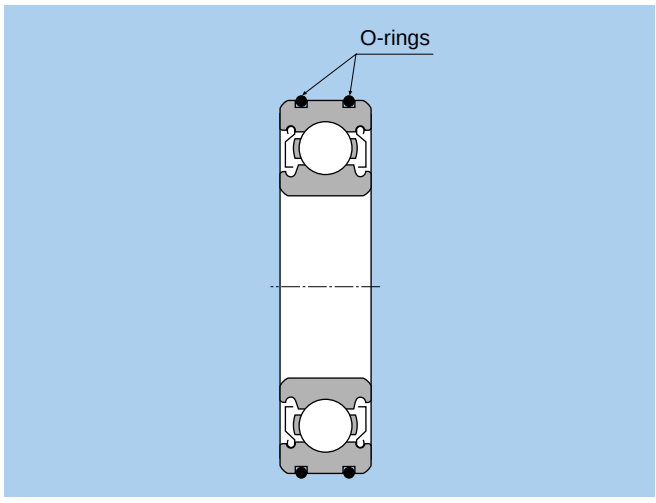

Diagram 3. AC bearing

This bearing has a steel housing, can withstand rotating outer ring loads, and is suitable for applications where a "tight fit" is not possible but the fear of creeping exists. With its capacity for axial load displacement, an AC bearing can also be installed as a floating side bearing to accommodate shaft fluctuations. Before installing the bearing into the housing, high viscosity oil (base oil viscosity, 100 mm²/s or more) or grease should be applied to the space between the two O-rings. This lubricant forms a thin oil layer inside the bearing which prevents contact between the outer ring and housing, lowers the coefficient of friction, and is still able to prevent creeping by utilizing the friction force of the O-rings.Outer ring spin is prevented by friction force of the O-ring and housing.

For dimensional specifications, handling procedures, and other detailed information concerning AC bearings, contact NTN Engineering.

(1) Allowable load

Because allowable load C_p that takes outer ring strength into account (see dimensions table) is established, selection must be made so that maximum load on the bearing does not exceed C_p.

(2) Fit with housing

Table 4 gives recommended fit with steel housing.

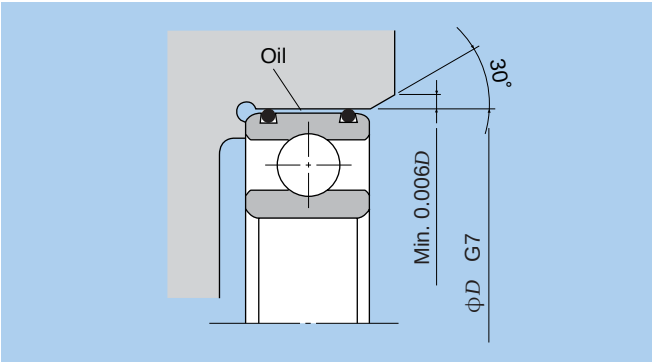

Diagram 4. Housing

Table 4 dimensions and shape

Housing bore tolerance	G7
Housing bore entrance chamfer	Max. 30˚C
Housing bore chamfer grinding undercut	Min. 0.006D
Housing bore finish roughness	2.5 μm Ra
Housing bore roundness	1/2 bearing housing dimension tolerance

(3) Allowable temperature range

-25 ～120˚C

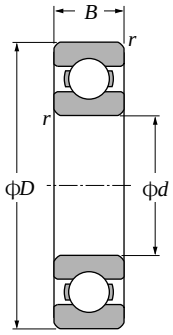

Open type

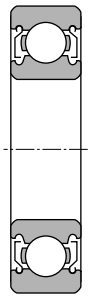

Shielded type (ZZ)

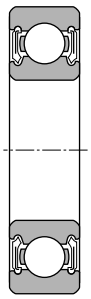

Non-contact sealed type (LLB, LLF)

Low torque sealed type (LLH)

Contact sealed type (LLU)

d 10～20mm

Boundary dimensions					Basic load ratings				Factor	Limiting speeds				Bearing numbers				
					dynamic	static	dynamic	static										
	mm				kN		kgf			min^{-1}								
d	*D*	*B*	$r_{s\,min}$[1]	r_{NS} min	C_r	C_{or}	C_r	C_{or}	f_o	grease open type ZZ LLB	oil open type Z LB	LLH	LLU	open type	shielded type	non-contact sealed type	low torque sealed type	contact sealed type
10	15	3	0.1	—	0.855	0.435	87	44	15.7	10 000	12 000	—	—	**6700**	—	—	—	—
	19	5	0.3	—	1.83	0.925	187	94	14.8	32 000	38 000	—	24 000	**6800**	**ZZ**	**LLB**	—	**LLU**
	22	6	0.3	0.3	2.7	1.27	275	129	14.0	30 000	36 000	—	21 000	**6900**	**ZZ**	**LLB**	—	**LLU**
	26	8	0.3	—	4.55	1.96	465	200	12.4	29 000	34 000	25 000	21 000	**6000**	**ZZ**	**LLB**	**LLH**	**LLU**
	30	9	0.6	0.5	5.10	2.39	520	244	13.2	25 000	30 000	21 000	18 000	**6200**	**ZZ**	**LLB**	**LLH**	**LLU**
	35	11	0.6	0.5	8.20	3.50	835	355	11.4	23 000	27 000	20 000	16 000	**6300**	**ZZ**	**LLB**	**LLH**	**LLU**
12	18	4	0.2	—	0.930	0.530	95	54	16.2	8 300	9 500	—	—	**6701**	—	**LLF**	—	—
	21	5	0.3	—	1.92	1.04	195	106	15.3	29 000	35 000	—	20 000	**6801**	**ZZ**	**LLB**	—	**LLU**
	24	6	0.3	0.3	2.89	1.46	295	149	14.5	27 000	32 000	—	19 000	**6901**	**ZZ**	**LLB**	—	**LLU**
	28	7	0.3	—	5.10	2.39	520	244	13.2	26 000	30 000	—	—	**16001**	—	—	—	—
	28	8	0.3	—	5.10	2.39	520	244	13.2	26 000	30 000	21 000	18 000	**6001**	**ZZ**	**LLB**	**LLH**	**LLU**
	32	10	0.6	0.5	6.10	2.75	620	280	12.7	22 000	26 000	20 000	16 000	**6201**	**ZZ**	**LLB**	**LLH**	**LLU**
	37	12	1	0.5	9.70	4.20	990	425	11.1	20 000	24 000	19 000	15 000	**6301**	**ZZ**	**LLB**	**LLH**	**LLU**
15	21	4	0.2	—	0.940	0.585	96	59	16.5	6 600	7 600	—	—	**6702**	—	**LLF**	—	—
	24	5	0.3	—	2.08	1.26	212	128	15.8	26 000	31 000	—	17 000	**6802**	**ZZ**	**LLB**	—	**LLU**
	28	7	0.3	0.3	3.65	2.00	375	204	14.8	24 000	28 000	—	16 000	**6902**	**ZZ**	**LLB**	—	**LLU**
	32	8	0.3	—	5.60	2.83	570	289	13.9	22 000	26 000	—	—	**16002**	—	—	—	—
	32	9	0.3	0.3	5.60	2.83	570	289	13.9	22 000	26 000	18 000	15 000	**6002**	**ZZ**	**LLB**	**LLH**	**LLU**
	35	11	0.6	0.5	7.75	3.60	790	365	12.7	19 000	23 000	18 000	15 000	**6202**	**ZZ**	**LLB**	**LLH**	**LLU**
	42	13	1	0.5	11.4	5.45	1 170	555	12.3	17 000	21 000	15 000	12 000	**6302**	**ZZ**	**LLB**	**LLH**	**LLU**
17	23	4	0.2	—	1.00	0.660	102	67	16.3	5 000	6 700	—	—	**6703**	—	**LLF**	—	—
	26	5	0.3	—	2.23	1.46	227	149	16.1	24 000	28 000	—	15 000	**6803**	**ZZ**	**LLB**	—	**LLU**
	30	7	0.3	0.3	4.65	2.58	475	263	14.7	22 000	26 000	—	14 000	**6903**	**ZZ**	**LLB**	—	**LLU**
	35	8	0.3	—	6.80	3.35	695	345	13.6	20 000	24 000	—	—	**16003**	—	—	—	—
	35	10	0.3	0.3	6.80	3.35	695	345	13.6	20 000	24 000	16 000	14 000	**6003**	**ZZ**	**LLB**	**LLH**	**LLU**
	40	12	0.6	0.5	9.60	4.60	980	465	12.8	18 000	21 000	15 000	12 000	**6203**	**ZZ**	**LLB**	**LLH**	**LLU**
	47	14	1	0.5	13.5	6.55	1 380	665	12.2	16 000	19 000	14 000	11 000	**6303**	**ZZ**	**LLB**	**LLH**	**LLU**
	62	17	1.1	—	22.7	10.8	2 320	1 100	11.1	14 000	16 000	—	—	**6403**	—	—	—	—
20	27	4	0.2	—	1.04	0.730	106	74	16.1	5 000	5 700	—	—	**6704**	—	**LLF**	—	—
	32	7	0.3	0.3	4.00	2.47	410	252	15.5	21 000	25 000	—	13 000	**6804**	**ZZ**	**LLB**	—	**LLU**
	37	9	0.3	0.3	6.40	3.70	650	375	14.7	19 000	23 000	—	12 000	**6904**	**ZZ**	**LLB**	—	**LLU**
	42	8	0.3	—	7.90	4.50	810	455	14.5	18 000	21 000	—	—	**16004**	—	—	—	—
	42	12	0.6	0.5	9.40	5.05	955	515	13.9	18 000	21 000	13 000	11 000	**6004**	**ZZ**	**LLB**	**LLH**	**LLU**
	47	14	1	0.5	12.8	6.65	1 310	680	13.2	16 000	18 000	12 000	10 000	**6204**	**ZZ**	**LLB**	**LLH**	**LLU**
	52	15	1.1	0.5	15.9	7.90	1 620	805	12.4	14 000	17 000	12 000	10 000	**6304**	**ZZ**	**LLB**	**LLH**	**LLU**

1) Smallest allowable dimension for chamfer dimension *r*.

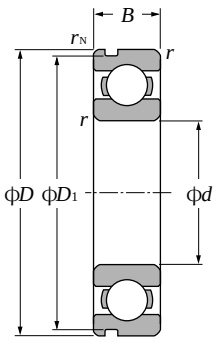

With snap ring groove

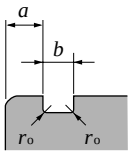

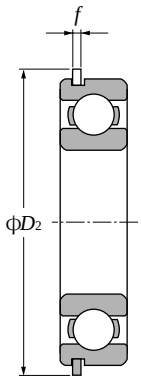

With snap ring

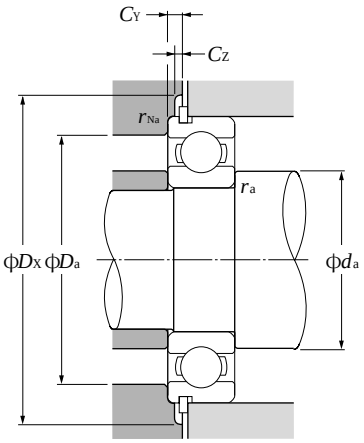

Dynamic equivalent radial load

$P_r = XF_r + YF_a$

$\frac{f_o \cdot F_a}{C_{or}}$	e	$\frac{F_a}{F_r} \leqq e$		$\frac{F_a}{F_r} > e$	
		X	Y	X	Y
0.172	0.19	1	0	0.56	2.30
0.345	0.22				1.99
0.689	0.26				1.71
1.03	0.28				1.55
1.38	0.30				1.45
2.07	0.34				1.31
3.45	0.38				1.15
5.17	0.42				1.04
6.89	0.44				1.00

Static equivalent radial load

$P_{or} = 0.6F_r + 0.5F_a$

When $P_{or} < F_r$ use $P_{or} = F_r$

Bearing numbers		Snap ring groove dimensions mm				Snap ring dimensions mm		Abutment and fillet dimensions mm							Mass[4] kg
snap[2] ring groove	snap[2] ring	D_1 max	a max	b min	r_o max	D_2 max	f max	d_a min	d_a max[3]	D_a max	D_X (approx.)	C_Y max	C_Z min	r_{as} max	r_{Nas} max	(approx.)
—	—	—	—	—	—	—	—	10.8	—	14.2	—	—	—	0.1	—	0.0015
—	—	—	—	—	—	—	—	12	12.5	17	—	—	—	0.3	—	0.005
N	**NR**	20.8	1.05	0.8	0.2	24.8	0.7	12	13	20	25.5	1.5	0.7	0.3	0.3	0.009
—[5]	—[5]	—	—	—	—	—	—	12	13.5	24	—	—	—	0.3	—	0.019
N	**NR**	28.17	2.06	1.35	0.4	34.7	1.12	14	16	26	35.5	2.9	1.2	0.6	0.5	0.032
N	**NR**	33.17	2.06	1.35	0.4	39.7	1.12	14	17	31	40.5	2.9	1.2	0.6	0.5	0.053
—	—	—	—	—	—	—	—	13.6	13.8	16.4	—	—	—	0.2	—	0.002
—	—	—	—	—	—	—	—	14	14.5	19	—	—	—	0.3	—	0.006
N	**NR**	22.8	1.05	0.8	0.2	26.8	0.7	14	15	22	27.5	1.5	0.7	0.3	0.3	0.011
—	—	—	—	—	—	—	—	14	—	26	—	—	—	0.3	—	0.019
—[5]	—[5]	—	—	—	—	—	—	14	16	26	—	—	—	0.3	—	0.021
N	**NR**	30.15	2.06	1.35	0.4	36.7	1.12	16	17	28	37.5	2.9	1.2	0.6	0.5	0.037
N	**NR**	34.77	2.06	1.35	0.4	41.3	1.12	17	18.5	32	42	2.9	1.2	1	0.5	0.06
—	—	—	—	—	—	—	—	16.6	16.8	19.4	—	—	—	0.2	—	0.0025
—	—	—	—	—	—	—	—	17	17.5	22	—	—	—	0.3	—	0.007
N	**NR**	26.7	1.3	0.95	0.25	30.8	0.85	17	17.5	26	31.5	1.9	0.9	0.3	0.3	0.016
—	—	—	—	—	—	—	—	17	—	30	—	—	—	0.3	—	0.025
N	**NR**	30.15	2.06	1.35	0.4	36.7	1.12	17	19	30	37.5	2.9	1.2	0.3	0.3	0.03
N	**NR**	33.17	2.06	1.35	0.4	39.7	1.12	19	20	31	40.5	2.9	1.2	0.6	0.5	0.045
N	**NR**	39.75	2.06	1.35	0.4	46.3	1.12	20	23	37	47	2.9	1.2	1	0.5	0.082
—	—	—	—	—	—	—	—	18.6	18.8	21.4	—	—	—	0.2	—	0.0025
—	—	—	—	—	—	—	—	19	19.5	24	—	—	—	0.3	—	0.008
N	**NR**	28.7	1.3	0.95	0.25	32.8	0.85	19	20	28	33.5	1.9	0.9	0.3	0.3	0.018
—	—	—	—	—	—	—	—	19	—	33	—	—	—	0.3	—	0.032
N	**NR**	33.17	2.06	1.35	0.4	39.7	1.12	19	21	33	40.5	2.9	1.2	0.3	0.3	0.039
N	**NR**	38.1	2.06	1.35	0.4	44.6	1.12	21	23	36	45.5	2.9	1.2	0.6	0.5	0.066
N	**NR**	44.6	2.46	1.35	0.4	52.7	1.12	22	25	42	53.5	3.3	1.2	1	0.5	0.115
—	—	—	—	—	—	—	—	23.5	—	55.5	—	—	—	1	—	0.27
—	—	—	—	—	—	—	—	21.6	22.3	25.4	—	—	—	0.2	—	0.0045
N	**NR**	30.7	1.3	0.95	0.25	34.8	0.85	22	22.5	30	35.5	1.9	0.9	0.3	0.3	0.019
N	**NR**	35.7	1.7	0.95	0.25	39.8	0.85	22	24	35	40.5	2.3	0.9	0.3	0.3	0.036
—	—	—	—	—	—	—	—	22	—	40	—	—	—	0.3	—	0.051
N	**NR**	39.75	2.06	1.35	0.4	46.3	1.12	24	26	38	47	2.9	1.2	0.6	0.5	0.069
N	**NR**	44.6	2.46	1.35	0.4	52.7	1.12	25	28	42	53.5	3.3	1.2	1	0.5	0.106
N	**NR**	49.73	2.46	1.35	0.4	57.9	1.12	26.5	28.5	45.5	58.5	3.3	1.2	1	0.5	0.144

2) Sealed and shielded bearings are also available. 3) This dimension applies to sealed and shielded bearings. 4) Does not include bearings with snap rings. 5) See page B-40.

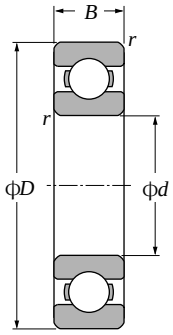

Open type

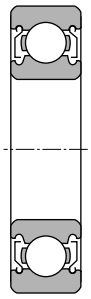

Shielded type (ZZ)

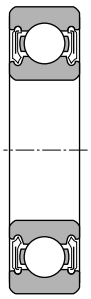

Non-contact sealed type (LLB, LLF)

Low torque sealed type (LLH)

Contact sealed type (LLU)

d 20～35mm

Boundary dimensions					Basic load ratings				Factor	Limiting speeds				Bearing numbers				
					dynamic	static	dynamic	static										
	mm				kN		kgf			grease	oil	min^{-1}						
d	*D*	*B*	$r_{s\,min}$[1]	r_{NS} min	C_r	C_{or}	C_r	C_{or}	f_o	open type ZZ LLB	open type Z LB	LLH	LLU	open type	shielded type	non-contact sealed type	low torque sealed type	contact sealed type
20	72	19	1.1	—	28.5	13.9	2 900	1 420	11.4	12 000	14 000	—	—	**6404**	—	—	—	—
22	44	12	0.6	0.5	9.40	5.05	955	515	13.9	17 000	20 000	13 000	10 000	**60/22ZZ**	**LLB**	**LLH**	**LLU**	
	50	14	1	0.5	12.9	6.80	1 320	690	13.5	14 000	17 000	12 000	9 700	**62/22**	**ZZ**	**LLB**	**LLH**	**LLU**
	56	16	1.1	0.5	18.4	9.25	1 880	945	12.4	13 000	15 000	11 000	9 200	**63/22**	**ZZ**	**LLB**	**LLH**	**LLU**
25	32	4	0.2	—	1.10	0.840	112	86	15.8	4 000	4 600	—	—	**6705**	—	**LLF**	—	—
	37	7	0.3	0.3	4.30	2.95	435	300	16.1	18 000	21 000	—	10 000	**6805**	**ZZ**	**LLB**	—	**LLU**
	42	9	0.3	0.3	7.05	4.55	715	460	15.4	16 000	19 000	—	9 800	**6905**	**ZZ**	**LLB**	—	**LLU**
	47	8	0.3	—	8.35	5.10	855	520	15.1	15 000	18 000	—	—	**16005**	—	—	—	—
	47	12	0.6	0.5	10.1	5.85	1 030	595	14.5	15 000	18 000	11 000	9 400	**6005**	**ZZ**	**LLB**	**LLH**	**LLU**
	52	15	1	0.5	14.0	7.85	1 430	800	13.9	13 000	15 000	11 000	8 900	**6205**	**ZZ**	**LLB**	**LLH**	**LLU**
	62	17	1.1	0.5	21.2	10.9	2 160	1 110	12.6	12 000	14 000	9 700	8 100	**6305**	**ZZ**	**LLB**	**LLH**	**LLU**
	80	21	1.5	—	34.5	17.5	3 550	1 780	11.6	10 000	12 000	—	—	**6405**	—	—	—	—
28	52	12	0.6	0.5	12.5	7.40	1 270	755	14.5	14 000	16 000	10 000	8 400	**60/28**	**ZZ**	**LLB**	**LLH**	**LLU**
	58	16	1	0.5	17.9	9.75	1 830	995	13.4	12 000	14 000	9 700	8 100	**62/28**	**ZZ**	**LLB**	**LLH**	**LLU**
	68	18	1.1	0.5	26.7	14.0	2 730	1 430	12.4	11 000	13 000	8 900	7 400	**63/28**	**ZZ**	**LLB**	**LLH**	**LLU**
30	37	4	0.2	—	1.14	0.950	117	97	15.7	3 300	3 800	—	—	**6706**	—	**LLF**	—	—
	42	7	0.3	0.3	4.70	3.65	480	370	16.5	15 000	18 000	—	8.800	**6806**	**ZZ**	**LLB**	—	**LLU**
	47	9	0.3	0.3	7.25	5.00	740	510	15.8	14 000	17 000	—	8 400	**6906**	**ZZ**	**LLB**	—	**LLU**
	55	9	0.3	—	11.2	7.35	1 150	750	15.2	13 000	15 000	—	—	**16006**	—	—	—	—
	55	13	1	0.5	13.2	8.3	1 350	845	14.8	13 000	15 000	9 200	7 700	**6006**	**ZZ**	**LLB**	**LLH**	**LLU**
	62	16	1	0.5	19.5	11.3	1 980	1 150	13.8	11 000	13 000	8 800	7 300	**6206**	**ZZ**	**LLB**	**LLH**	**LLU**
	72	19	1.1	0.5	26.7	15.0	2 720	1 530	13.3	10 000	12 000	7 900	6 600	**6306**	**ZZ**	**LLB**	**LLH**	**LLU**
	90	23	1.5	—	43.5	23.9	4 400	2 440	12.3	8 800	10 000	—	—	**6406**	—	—	—	—
32	58	13	1	0.5	11.8	8.05	1 200	820	15.4	12 000	15 000	8 700	7 200	**60/32**	**ZZ**	**LLB**	**LLH**	**LLU**
	65	17	1	0.5	20.7	11.6	2 110	1 190	13.6	11 000	12 000	8 400	7 100	**62/32**	**ZZ**	**LLB**	**LLH**	**LLU**
	75	20	1.1	0.5	29.8	16.9	3 050	1 730	13.1	9 500	11 000	7 700	6 500	**63/32**	**ZZ**	**LLB**	**LLH**	**LLU**
35	47	7	0.3	0.3	4.90	4.05	500	410	16.4	13 000	16 000	—	7 600	**6807**	**ZZ**	**LLB**	—	**LLU**
	55	10	0.6	0.5	9.55	6.85	975	695	15.8	12 000	15 000	—	7 100	**6907**	**ZZ**	**LLB**	—	**LLU**
	62	9	0.3	—	11.7	8.20	1 190	835	15.6	12 000	14 000	—	—	**16007**	—	—	—	—
	62	14	1	0.5	16.0	10.3	1 630	1 050	14.8	12 000	14 000	8 200	6 800	**6007**	**ZZ**	**LLB**	**LLH**	**LLU**
	72	17	1.1	0.5	25.7	15.3	2 620	1 560	13.8	9 800	11 000	7 600	6 300	**6207**	**ZZ**	**LLB**	**LLH**	**LLU**
	80	21	1.5	0.5	33.5	19.1	3 400	1 950	13.1	8 800	10 000	7 300	6 000	**6307**	**ZZ**	**LLB**	**LLH**	**LLU**
	100	25	1.5	—	55.0	31.0	5 600	3 150	12.3	7 800	9 100	—	—	**6407**	—	—	—	—

1）Smallest allowable dimension for chamfer dimension *r*.

Deep Groove Ball Bearings

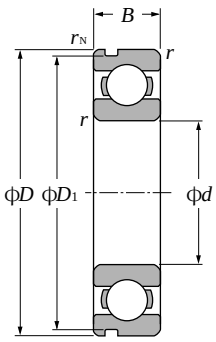

With snap ring groove

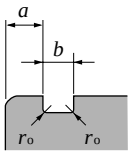

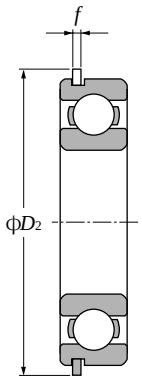

With snap ring

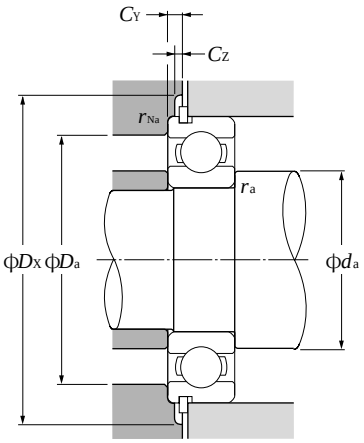

Dynamic equivalent radial load

$P_r = XF_r + YF_a$

$\frac{f_o \cdot F_a}{C_{or}}$	e	$\frac{F_a}{F_r} \leqq e$		$\frac{F_a}{F_r} > e$	
		X	Y	X	Y
0.172	0.19	1	0	0.56	2.30
0.345	0.22				1.99
0.689	0.26				1.71
1.03	0.28				1.55
1.38	0.30				1.45
2.07	0.34				1.31
3.45	0.38				1.15
5.17	0.42				1.04
6.89	0.44				1.00

Static equivalent radial load

$P_{or} = 0.6F_r + 0.5F_a$

When $P_{or} < F_r$ use $P_{or} = F_r$

Bearing numbers		Snap ring groove dimensions mm				Snap ring dimensions mm		Abutment and fillet dimensions mm								Mass[4] kg
snap[2] ring groove	snap[2] ring	D_1 max	a max	b min	r_o max	D_2 max	f max	d_a min	d_a max[3]	D_a max	D_X (approx.)	C_Y max	C_Z min	r_{as} max	r_{Nas} max	(approx.)
—	—	—	—	—	—	—	—	26.5	—	65.5	—	—	—	**1**	—	0.4
N	**NR**	41.75	2.06	1.35	0.4	48.3	1.12	26	26.5	40	49	2.9	1.2	0.6	0.5	0.074
N	**NR**	47.6	2.46	1.35	0.4	55.7	1.12	27	29.5	45	56.5	3.3	1.2	1	0.5	0.117
N	**NR**	53.6	2.46	1.35	0.4	61.7	1.12	28.5	31	49.5	62.5	3.3	1.2	1	0.5	0.176
—	—	—	—	—	—	—	—	26.6	27.3	30.4	—	—	—	0.2	—	0.005
N	**NR**	35.7	1.3	0.95	0.25	39.8	0.85	27	28	35	40.5	1.9	0.9	0.3	0.3	0.022
N	**NR**	40.7	1.7	0.95	0.25	44.8	0.85	27	29	40	45.5	2.3	0.9	0.3	0.3	0.042
—	—	—	—	—	—	—	—	27	—	45.0	—	—	—	0.3	—	0.06
N	**NR**	44.6	2.06	1.35	0.4	52.7	1.12	29	30.5	43	53.5	2.9	1.2	0.6	0.5	0.08
N	**NR**	49.73	2.46	1.35	0.4	57.9	1.12	30	32	47	58.5	3.3	1.2	1	0.5	0.128
N	**NR**	59.61	3.28	1.9	0.6	67.7	1.7	31.5	35	55.5	68.5	4.6	1.7	1	0.5	0.232
—	—	—	—	—	—	—	—	33	—	72	—	—	—	1.5	—	0.53
N	**NR**	49.73	2.06	1.35	0.4	57.9	1.12	32	34	48	58.5	2.9	1.2	0.6	0.5	0.098
N	**NR**	55.6	2.46	1.35	0.4	63.7	1.12	33	35.5	53	64.5	3.3	1.2	1	0.5	0.171
N	**NR**	64.82	3.28	1.9	0.6	74.6	1.7	34.5	38.5	61.5	76	4.6	1.7	1	0.5	0.284
—	—	—	—	—	—	—	—	31.6	32.3	35.4	—	—	—	0.2	—	0.006
N	**NR**	40.7	1.3	0.95	0.25	44.8	0.85	32	33	40	45.5	1.9	0.9	0.3	0.3	0.026
N	**NR**	45.7	1.7	0.95	0.25	49.8	0.85	32	34	45	50.5	2.3	0.9	0.3	0.3	0.048
—	—	—	—	—	—	—	—	32	—	53	—	—	—	0.3	—	0.091
N	**NR**	52.6	2.08	1.35	0.4	60.7	1.12	35	37	50	61.5	2.9	1.2	1	0.5	0.116
N	**NR**	59.61	3.28	1.9	0.6	67.7	1.7	35	39	57	68.5	4.6	1.7	1	0.5	0.199
N	**NR**	68.81	3.28	1.9	0.6	78.6	1.7	36.5	43	65.5	80	4.6	1.7	1	0.5	0.36
—	—	—	—	—	—	—	—	38	—	82	—	—	—	1.5	—	0.735
N	**NR**	55.6	2.08	1.35	0.4	63.7	1.12	37	39	53	64.5	2.9	1.2	1	0.5	0.129
N	**NR**	62.6	3.28	1.9	0.6	70.7	1.7	37	40	60	71.5	4.6	1.7	1	0.5	0.226
N	**NR**	71.83	3.28	1.9	0.6	81.6	1.7	38.5	43.5	68.5	83	4.6	1.7	1	0.5	0.382
N	**NR**	45.7	1.3	0.95	0.25	49.8	0.85	37	38	45	50.5	1.9	0.9	0.3	0.3	0.029
N	**NR**	53.7	1.7	0.95	0.25	57.8	0.85	39	40	51	58.5	2.3	0.9	0.6	0.5	0.074
—	—	—	—	—	—	—	—	37	—	60	—	—	—	0.3	—	0.11
N	**NR**	59.61	2.08	1.9	0.6	67.7	1.7	40	42	57	68.5	3.4	1.7	1	0.5	0.155
N	**NR**	68.81	3.28	1.9	0.6	78.6	1.7	41.5	45	65.5	80	4.6	1.7	1	0.5	0.288
N	**NR**	76.81	3.28	1.9	0.6	86.6	1.7	43	47	72	88	4.6	1.7	1.5	0.5	0.457
	—	—	—	—	—	—	—	43	—	92	—	—	—	1.5	—	0.952

2）Sealed and shielded bearings are also available. 3）This dimension applies to sealed and shielded bearings. 4）Does not include bearings with snap rings.

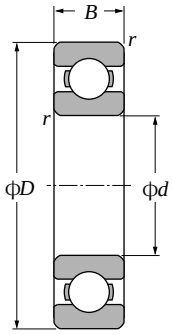

Open type

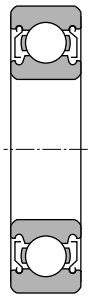

Shielded type (ZZ)

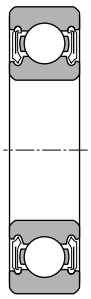

Non-contact sealed type (LLB, LLF)

Low torque sealed type (LLH)

Contact sealed type (LLU)

d 40～60mm

Boundary dimensions					Basic load ratings				Factor	Limiting speeds				Bearing numbers				
					dynamic	static	dynamic	static										
	mm				kN		kgf			min^{-1}								
d	*D*	*B*	$r_{s\,min}$[1]	r_{NS} min	C_r	C_{or}	C_r	C_{or}	f_o	grease open type ZZ LLB	oil open type Z LB	LLH	LLU	open type	shielded type	non-contact sealed type	low torque sealed type	contact sealed type
40	52	7	0.3	0.3	5.10	4.40	520	445	16.3	12 000	14 000	—	6 700	**6808**	**ZZ**	**LLB**	—	**LLU**
	62	12	0.6	0.5	12.2	8.90	1 240	910	15.8	11 000	13 000	—	6 300	**6908**	**ZZ**	**LLB**	—	**LLU**
	68	9	0.3	—	12.6	9.65	1 290	985	16.0	10 000	12 000	—	—	**16008**	—	—	—	—
	68	15	1	0.5	16.8	11.5	1 710	1 170	15.2	10 000	12 000	7 300	6 100	**6008**	**ZZ**	**LLB**	**LLH**	**LLU**
	80	18	1.1	0.5	29.1	17.8	2 970	1 820	14.0	8 700	10 000	6 700	5 600	**6208**	**ZZ**	**LLB**	**LLH**	**LLU**
	90	23	1.5	0.5	40.5	24.0	4 150	2 450	13.2	7 800	9 200	6 400	5 300	**6308**	**ZZ**	**LLB**	**LLH**	**LLU**
	110	27	2	—	63.5	36.5	6 500	3 750	12.3	7 000	8 200	—	—	**6408**	—	—	—	—
45	58	7	0.3	0.3	5.35	4.95	550	500	16.1	11 000	12 000	—	5 900	**6809**	**ZZ**	**LLB**	—	**LLU**
	68	12	0.6	0.5	13.1	10.4	1 330	1 060	16.1	9 800	12 000	—	5 600	**6909**	**ZZ**	**LLB**	—	**LLU**
	75	10	0.6	—	12.9	10.5	1 320	1 070	16.2	9 200	11 000	—	—	**16009**	—	—	—	—
	75	16	1	0.5	21.0	15.1	2 140	1 540	15.3	9 200	11 000	6 500	5 400	**6009**	**ZZ**	**LLB**	**LLH**	**LLU**
	85	19	1.1	0.5	32.5	20.4	3 350	2 080	14.1	7 800	9 200	6 200	5 200	**6209**	**ZZ**	**LLB**	**LLH**	**LLU**
	100	25	1.5	0.5	53.0	32.0	5 400	3 250	13.1	7 000	8 200	5 600	4 700	**6309**	**ZZ**	**LLB**	**LLH**	**LLU**
	120	29	2	—	77.0	45.0	7 850	4 600	12.1	6 300	7 400	—	—	**6409**	—	—	—	—
50	65	7	0.3	0.3	6.60	6.10	670	620	16.1	9 600	11 000	—	5 300	**6810**	**ZZ**	**LLB**	—	**LLU**
	72	12	0.6	0.5	13.4	11.2	1 370	1 140	16.3	8 900	11 000	—	5 100	**6910**	**ZZ**	**LLB**	—	**LLU**
	80	10	0.6	—	13.2	11.3	1 350	1 150	16.4	8 400	9 800	—	—	**16010**	—	—	—	—
	80	16	1	0.5	21.8	16.6	2 230	1 690	15.5	8 400	9 800	6 000	5 000	**6010**	**ZZ**	**LLB**	**LLH**	**LLU**
	90	20	1.1	0.5	35.0	23.2	3 600	2 370	14.4	7 100	8 300	5 700	4 700	**6210**	**ZZ**	**LLB**	**LLH**	**LLU**
	110	27	2	0.5	62.0	38.5	6 300	3 900	13.2	6 400	7 500	5 000	4 200	**6310**	**ZZ**	**LLB**	**LLH**	**LLU**
	130	31	2.1	—	83.0	49.5	8 450	5 050	12.5	5 700	6 700	—	—	**6410**	—	—	—	—
55	72	9	0.3	0.3	8.80	8.10	900	825	16.2	8 700	10 000	—	4 800	**6811**	**ZZ**	**LLB**	—	**LLU**
	80	13	1	0.5	16.0	13.3	1 630	1 350	16.2	8 200	9 600	—	4 600	**6911**	**ZZ**	**LLB**	—	**LLU**
	90	11	0.6	—	18.6	15.3	1 900	1 560	16.2	7 700	9 000	—	—	**16011**	—	—	—	—
	90	18	1.1	0.5	28.3	21.2	2 880	2 170	15.3	7 700	9 000	—	4 500	**6011**	**ZZ**	**LLB**	—	**LLU**
	100	21	1.5	0.5	43.5	29.2	4 450	2 980	14.3	6 400	7 600	—	4 300	**6211**	**ZZ**	**LLB**	—	**LLU**
	120	29	2	0.5	71.5	45.0	7 300	4 600	13.2	5 800	6 800	—	3 900	**6311**	**ZZ**	**LLB**	—	**LLU**
	140	33	2.1	—	89.0	54.0	9 050	5 500	12.7	5 200	6 100	—	—	**6411**	—	—	—	—
60	78	10	0.3	0.3	11.5	10.6	1 170	1 080	16.3	8 000	9 400	—	4 400	**6812**	**ZZ**	**LLB**	—	**LLU**
	85	13	1	0.5	16.4	14.3	1 670	1 450	16.4	7 600	8 900	—	4 300	**6912**	**ZZ**	**LLB**	—	**LLU**
	95	11	0.6	—	20.0	17.5	2 040	1 780	16.3	7 000	8 300	—	—	**16012**	—	—	—	—
	95	18	1.1	0.5	29.5	23.2	3 000	2 370	15.6	7 000	8 300	—	4 100	**6012**	**ZZ**	**LLB**	—	**LLU**
	110	22	1.5	0.5	52.5	36.0	5 350	3 700	14.3	6 000	7 000	—	3 800	**6212**	**ZZ**	**LLB**	—	**LLU**
	130	31	2.1	0.5	82.0	52.0	8 350	5 300	13.2	5 400	6 300	—	3 600	**6312**	**ZZ**	**LLB**	—	**LLU**
	150	35	2.1	—	102	64.5	10 400	6 550	12.6	4 800	5 700	—	—	**6412**	—	—	—	—

1) Smallest allowable dimension for chamfer dimension *r*.

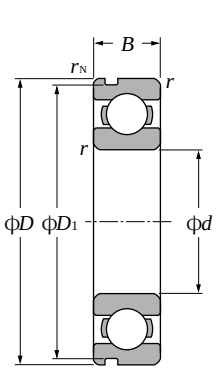

With snap ring groove

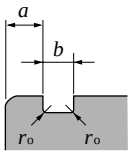

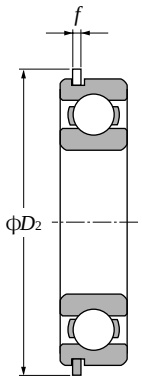

With snap ring

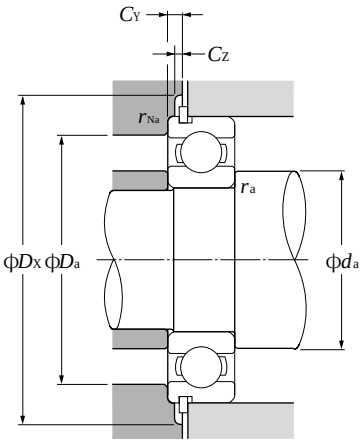

Dynamic equivalent radial load

$P_r = XF_r + YF_a$

$\frac{f_o \cdot F_a}{C_{or}}$	e	$\frac{F_a}{F_r} \leqq e$		$\frac{F_a}{F_r} > e$	
		X	Y	X	Y
0.172	0.19	1	0	0.56	2.30
0.345	0.22				1.99
0.689	0.26				1.71
1.03	0.28				1.55
1.38	0.30				1.45
2.07	0.34				1.31
3.45	0.38				1.15
5.17	0.42				1.04
6.89	0.44				1.00

Static equivalent radial load

$P_{or} = 0.6F_r + 0.5F_a$

When $P_{or} < F_r$ use $P_{or} = F_r$

Bearing numbers		Snap ring groove dimensions mm				Snap ring dimensions mm		Abutment and fillet dimensions mm								Mass[4] kg
snap[2] ring groove	snap[2] ring	D_1 max	a max	b min	r_o max	D_2 max	f max	d_a min	d_a max[3]	D_a max	D_X (approx.)	C_Y max	C_Z min	r_{as} max	r_{Nas} max	(approx.)
N	**NR**	50.7	1.3	0.95	0.25	54.8	0.85	42	43	50	55.5	1.9	0.9	0.3	0.3	0.033
N	**NR**	60.7	1.7	0.95	0.25	64.8	0.85	44	45	58	65.5	2.3	0.9	0.6	0.5	0.11
—	—	—	—	—	—	—	—	42	—	66	—	—	—	0.3	—	0.125
N	**NR**	64.82	2.49	1.9	0.6	74.6	1.7	45	47	63	76	3.8	1.7	1	0.5	0.19
N	**NR**	76.81	3.28	1.9	0.6	86.6	1.7	46.5	51	73.5	88	4.6	1.7	1	0.5	0.366
N	**NR**	86.79	3.28	2.7	0.6	96.5	2.46	48	54	82	98	5.4	2.5	1.5	0.5	0.63
—	—	—	—	—	—	—	—	49	—	101	—	—	—	2.0	—	1.23
N	**NR**	56.7	1.3	0.95	0.25	60.8	0.85	47	48	56	61.5	1.9	0.9	0.3	0.3	0.04
N	**NR**	66.7	1.7	0.95	0.25	70.8	0.85	49	51	64	72	2.3	0.9	0.6	0.5	0.128
—	—	—	—	—	—	—	—	49	—	71	—	—	—	0.6	—	0.171
N	**NR**	71.83	2.49	1.9	0.6	81.6	1.7	50	52.5	70	83	3.8	1.7	1	0.5	0.237
N	**NR**	81.81	3.28	1.9	0.6	91.6	1.7	51.5	55.5	78.5	93	4.6	1.7	1	0.5	0.398
N	**NR**	96.8	3.28	2.7	0.6	106.5	2.46	53	61.5	92	108	5.4	2.5	1.5	0.5	0.814
—	—	—	—	—	—	—	—	54	—	111	—	—	—	2	—	1.53
N	**NR**	63.7	1.3	0.95	0.25	67.8	0.85	52	54	63	68.5	1.9	0.9	0.3	0.3	0.052
N	**NR**	70.7	1.7	0.95	0.25	74.8	0.85	54	55.5	68	76	2.3	0.9	0.6	0.5	0.132
—	—	—	—	—	—	—	—	54	—	76	—	—	—	0.6	—	0.18
N	**NR**	76.81	2.49	1.9	0.6	86.6	1.7	55	57.5	75	88	3.8	1.7	1	0.5	0.261
N	**NR**	86.79	3.28	2.7	0.6	96.5	2.46	56.5	60	83.5	98	5.4	2.5	1	0.5	0.454
N	**NR**	106.81	3.28	2.7	0.6	116.6	2.46	59	68.5	101	118	5.4	2.5	2	0.5	1.07
—	—	—	—	—	—	—	—	61	—	119	—	—	—	2	—	1.88
N	**NR**	70.7	1.7	0.95	0.25	74.8	0.85	57	59	70	76	2.3	0.9	0.3	0.3	0.083
N	**NR**	77.9	2.1	1.3	0.4	84.4	1.12	60	61.5	75	86	2.9	1.2	1	0.5	0.18
—	—	—	—	—	—	—	—	59	—	86	—	—	—	0.6	—	0.258
N	**NR**	86.79	2.87	2.7	0.6	96.5	2.46	61.5	64	83.5	98	5	2.5	1	0.5	0.388
N	**NR**	96.8	3.28	2.7	0.6	106.5	2.46	63	67	92	108	5.4	2.5	1.5	0.5	0.601
N	**NR**	115.21	4.06	3.1	0.6	129.7	2.82	64	74	111	131.5	6.5	2.9	2	0.5	1.37
—	—	—	—	—	—	—	—	66	—	129	—	—	—	2	—	2.29
N	**NR**	76.2	1.7	1.3	0.4	82.7	1.12	62	64.5	76	84	2.5	1.2	0.3	0.3	0.106
N	**NR**	82.9	2.1	1.3	0.4	89.4	1.12	65	66.5	80	91	2.9	1.2	1	0.5	0.193
—	—	—	—	—	—	—	—	64	—	91	—	—	—	0.6	—	0.283
N	**NR**	91.82	2.87	2.7	0.6	101.6	2.46	66.5	69	88.5	103	5	2.5	1	0.5	0.414
N	**NR**	106.81	3.28	2.7	0.6	116.6	2.46	68	75	102	118	5.4	2.5	1.5	0.5	0.783
N	**NR**	125.22	4.06	3.1	0.6	139.7	2.82	71	80.5	119	141.5	6.5	2.9	2	0.5	1.73
—	—	—	—	—	—	—	—	71	—	139	—	—	—	2	—	2.77

2）Sealed and shielded bearings are also available. 3）This dimension applies to sealed and shielded bearings. 4）Does not include bearings with snap rings.

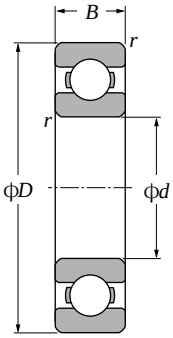

Open type

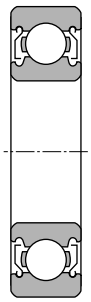

Shielded type (ZZ)

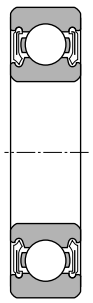

Non-contact sealed type (LLB)

Contact sealed type (LLU)

d 65～85mm

Boundary dimensions					Basic load ratings				Factor	Limiting speeds			Bearing numbers			
					dynamic	static	dynamic	static								
	mm				kN		kgf			grease	oil					
														non-contact	low-torque	contact
d	D	B	$r_{s\,min}$ [1]	r_{NS} min	C_r	C_{or}	C_r	C_{or}	f_o	open type ZZ	open type LLB	min^{-1} Z	min^{-1} LB	LLU	open type	shielded type	sealed type	sealed type
65	85	10	0.6	0.5	11.6	11.0	1 180	1 120	16.2	7 400	8 700	4 100			**6813**	**ZZ**	**LLB**	**LLU**
	90	13	1	0.5	17.4	16.1	1 770	1 640	16.6	7 000	8 200	4 000			**6913**	**ZZ**	**LLB**	**LLU**
	100	11	0.6	—	20.5	18.7	2 090	1 910	16.5	6 500	7 700	—			**16013**	—	—	—
	100	18	1.1	0.5	30.5	25.2	3 100	2 570	15.8	6 500	7 700	3 900			**6013**	**ZZ**	**LLB**	**LLU**
	120	23	1.5	0.5	57.5	40.0	5 850	4 100	14.4	5 500	6 500	3 600			**6213**	**ZZ**	**LLB**	**LLU**
	140	33	2.1	0.5	92.5	60.0	9 450	6 100	13.2	4 900	5 800	3 300			**6313**	**ZZ**	**LLB**	**LLU**
	160	37	2.1	—	111	72.5	11 300	7 400	12.7	4 400	5 200	—			**6413**	—	—	—
70	90	10	0.6	0.5	12.1	11.9	1 230	1 220	16.1	6 900	8 100	3 800			**6814**	**ZZ**	**LLB**	**LLU**
	100	16	1	0.5	23.7	21.2	2 420	2 160	16.3	6 500	7 700	3 700			**6914**	**ZZ**	**LLB**	**LLU**
	110	13	0.6	—	24.4	22.6	2 480	2 300	16.5	6 100	7 100	—			**16014**	—	—	—
	110	20	1.1	0.5	38.0	31.0	3 900	3 150	15.6	6 100	7 100	3 600			**6014**	**ZZ**	**LLB**	**LLU**
	125	24	1.5	0.5	62.0	44.0	6 350	4 500	14.5	5 100	6 000	3 400			**6214**	**ZZ**	**LLB**	**LLU**
	150	35	2.1	0.5	104	68.0	10 600	6 950	13.2	4 600	5 400	3 100			**6314**	**ZZ**	**LLB**	**LLU**
	180	42	3	—	128	89.5	13 100	9 100	12.7	4 100	4 800	—			**6414**	—	—	—
75	95	10	0.6	0.5	12.5	12.9	1 280	1 310	16.0	6 400	7 600	3 600			**6815**	**ZZ**	**LLB**	**LLU**
	105	16	1	0.5	24.4	22.6	2 480	2 300	16.5	6 100	7 200	3 500			**6915**	**ZZ**	**LLB**	**LLU**
	115	13	0.6	—	25.0	24.0	2 540	2 450	16.6	5 700	6 700	—			**16015**	—	—	—
	115	20	1.1	0.5	39.5	33.5	4 050	3 400	15.8	5 700	6 700	3 300			**6015**	**ZZ**	**LLB**	**LLU**
	130	25	1.5	0.5	66.0	49.5	6 750	5 050	14.7	4 800	5 600	3 200			**6215**	**ZZ**	**LLB**	**LLU**
	160	37	2.1	0.5	113	77.0	11 600	7 850	13.2	4 300	5 000	2 900			**6315**	**ZZ**	**LLB**	**LLU**
	190	45	3	—	138	99.0	14 000	10 100	12.7	3 800	4 500	—			**6415**	—	—	—
80	100	10	0.6	0.5	12.7	13.3	1 290	1 360	16.0	6 000	7 100	3 400			**6816**	**ZZ**	**LLB**	**LLU**
	110	16	1	0.5	24.9	24.0	2 540	2 450	16.6	5 700	6 700	3 200			**6916**	**ZZ**	**LLB**	**LLU**
	125	14	0.6	—	25.4	25.1	2 590	2 560	16.4	5 300	6 200	—			**16016**	—	—	—
	125	22	1.1	0.5	47.5	40.0	4 850	4 050	15.6	5 300	6 200	3 100			**6016**	**ZZ**	**LLB**	**LLU**
	140	26	2	0.5	72.5	53.0	7 400	5 400	14.6	4 500	5 300	3 000			**6216**	**ZZ**	**LLB**	**LLU**
	170	39	2.1	0.5	123	86.5	12 500	8 850	13.3	4 000	4 700	2 700			**6316**	**ZZ**	**LLB**	**LLU**
	200	48	3	—	164	125	16 700	12 800	12.3	3 600	4 200	—			**6416**	—	—	—
85	110	13	1	0.5	18.7	19.0	1 910	1 940	16.2	5 700	6 700	3 100			**6817**	**ZZ**	**LLB**	**LLU**
	120	18	1.1	0.5	32.0	29.6	3 250	3 000	16.4	5 400	6 300	3 000			**6917**	**ZZ**	**LLB**	**LLU**
	130	14	0.6	—	25.9	26.2	2 640	2 670	16.4	5 000	5 900	—			**16017**	—	—	—
	130	22	1.1	0.5	49.5	43.0	5 050	4 400	15.8	5 000	5 900	2 900			**6017**	**ZZ**	**LLB**	**LLU**
	150	28	2	0.5	83.5	64.0	8 500	6 500	14.7	4 200	5 000	2 800			**6217**	**ZZ**	**LLB**	**LLU**
	180	41	3	0.5	133	97.0	13 500	9 850	13.3	3 800	4 500	2 600			**6317**	**ZZ**	**LLB**	**LLU**

1) Smallest allowable dimension for chamfer dimension r.

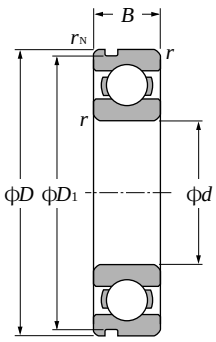

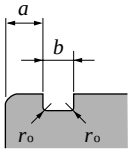

With snap ring groove

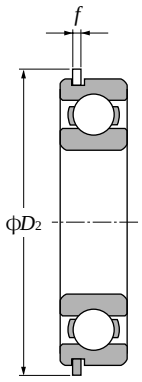

With snap ring

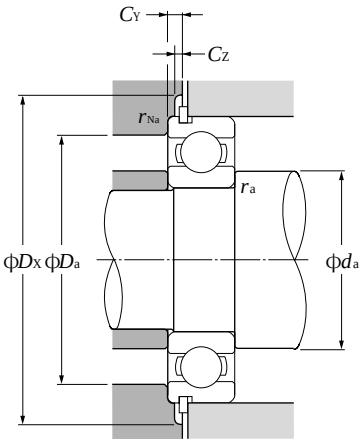

Dynamic equivalent radial load

$P_r = XF_r + YF_a$

$\frac{f_o \cdot F_a}{C_{or}}$	e	$\frac{F_a}{F_r} \leqq e$		$\frac{F_a}{F_r} > e$	
		X	Y	X	Y
0.172	0.19	1	0	0.56	2.30
0.345	0.22				1.99
0.689	0.26				1.71
1.03	0.28				1.55
1.38	0.30				1.45
2.07	0.34				1.31
3.45	0.38				1.15
5.17	0.42				1.04
6.89	0.44				1.00

Static equivalent radial load

$P_{or} = 0.6F_r + 0.5F_a$

When $P_{or} < F_r$ use $P_{or} = F_r$

Bearing numbers		Snap ring groove dimensions mm				Snap ring dimensions mm		Abutment and fillet dimensions mm								Mass[4] kg
snap[2] ring groove	snap[2] ring	D_1 max	a max	b min	r_o max	D_2 max	f max	d_a min	d_a max[3]	D_a max	D_X (approx.)	C_Y max	C_Z min	r_{as} max	r_{Nas} max	(approx.)
N	**NR**	82.9	1.7	1.3	0.4	89.4	1.12	69	70	81	91	2.5	1.2	0.6	0.5	0.128
N	**NR**	87.9	2.1	1.3	0.4	94.4	1.12	70	71.5	85	96	2.9	1.2	1	0.5	0.206
—	—	—	—	—	—	—	—	69	—	96	—	—	—	0.6	—	0.307
N	**NR**	96.8	2.87	2.7	0.6	106.5	2.46	71.5	74	93.5	108	5	2.5	1	0.5	0.421
N	**NR**	115.21	4.06	3.1	0.6	129.7	2.82	73	80.5	112	131.5	6.5	2.9	1.5	0.5	0.99
N	**NR**	135.23	4.9	3.1	0.6	149.7	2.82	76	86	129	152	7.3	2.9	2	0.5	2.08
—	—	—	—	—	—	—	—	76	—	149	—	—	—	2	—	3.3
N	**NR**	87.9	1.7	1.3	0.4	94.4	1.12	74	75.5	86	96	2.5	1.2	0.6	0.5	0.137
N	**NR**	97.9	2.5	1.3	0.4	104.4	1.12	75	77.5	95	106	3.3	1.2	1	0.5	0.334
—	—	—	—	—	—	—	—	74	—	106	—	—	—	0.6	—	0.441
N	**NR**	106.81	2.87	2.7	0.6	116.6	2.46	76.5	80.5	103.5	118	5	2.5	1	0.5	0.604
N	**NR**	120.22	4.06	3.1	0.6	134.7	2.82	78	85	117	136.5	6.5	2.9	1.5	0.5	1.07
N	**NR**	145.24	4.9	3.1	0.6	159.7	2.82	81	92.5	139	162	7.3	2.9	2	0.5	2.52
—	—	—	—	—	—	—	—	83	—	167	—	—	—	2.5	—	4.83
N	**NR**	92.9	1.7	1.3	0.4	99.4	1.12	79	80	91	101	2.5	1.2	0.6	0.5	0.145
N	**NR**	102.6	2.5	1.3	0.4	110.7	1.12	80	82.5	100	112	3.3	1.2	1	0.5	0.353
—	—	—	—	—	—	—	—	79	—	111	—	—	—	0.6	—	0.464
N	**NR**	111.81	2.87	2.7	0.6	121.6	2.46	81.5	85.5	108.5	123	5	2.5	1	0.5	0.649
N	**NR**	125.22	4.06	3.1	0.6	139.7	2.82	83	90.5	122	141.5	6.5	2.9	1.5	0.5	1.18
N	**NR**	155.22	4.9	3.1	0.6	169.7	2.82	86	99	149	172	7.3	2.9	2	0.5	3.02
—	—	—	—	—	—	—	—	88	—	177	—	—	—	2.5	—	5.72
N	**NR**	97.9	1.7	1.3	0.4	104.4	1.12	84	85	96	106	2.5	1.2	0.6	0.5	0.154
N	**NR**	107.6	2.5	1.3	0.4	115.7	1.12	85	88	105	117	3.3	1.2	1	0.5	0.373
—	—	—	—	—	—	—	—	84	—	121	—	—	—	0.6	—	0.597
N	**NR**	120.22	2.87	3.1	0.6	134.7	2.82	86.5	91.5	118.5	136.5	5.3	2.9	1	0.5	0.854
N	**NR**	135.23	4.9	3.1	0.6	149.7	2.82	89	95.5	131	152	7.3	2.9	2	0.5	1.4
N	**NR**	163.65	5.69	3.5	0.6	182.9	3.1	91	105	159	185	8.4	3.1	2	0.5	3.59
—	—	—	—	—	—	—	—	93	—	187	—	—	—	2.5	—	6.76
N	**NR**	107.6	2.1	1.3	0.4	115.7	1.12	90	91	105	117	2.9	1.2	1	0.5	0.27
N	**NR**	117.6	3.3	1.3	0.4	125.7	1.12	91.5	94	113.5	127	4.1	1.2	1	0.5	0.536
—	—	—	—	—	—	—	—	89	—	126	—	—	—	0.6	—	0.626
N	**NR**	125.22	2.87	3.1	0.6	139.7	2.82	91.5	97	123.5	141.5	5.3	2.9	1	0.5	0.89
N	**NR**	145.24	4.9	3.1	0.6	159.7	2.82	94	103	141	162	7.3	2.9	2	0.5	1.79
N	**NR**	173.66	5.69	3.5	0.6	192.9	3.1	98	112	167	195	8.4	3.1	2.5	0.5	4.23

2）Sealed and shielded bearings are also available. 3）This dimension applies to sealed and shielded bearings. 4）Does not include bearings with snap rings.

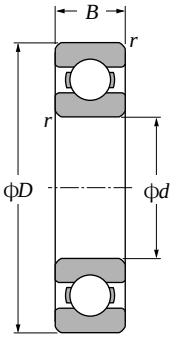

Open type

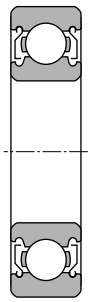

Shielded type (ZZ)

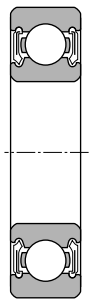

Non-contact sealed type (LLB)

Contact sealed type (LLU)

d 90～120mm

Boundary dimensions					Basic load ratings				Factor	Limiting speeds			Bearing numbers			
					dynamic	static	dynamic	static								
	mm				kN		kgf			min^{-1} grease	min^{-1} oil					
d	D	B	$r_{s\,min}$ [1]	r_{NS} min	C_r	C_{or}	C_r	C_{or}	f_o	open type ZZ LLB	open type Z LB	LLU	open type	non-contact shielded type	low-torque sealed type	contact sealed type
90	115	13	1	0.5	19.0	19.7	1 940	2 010	16.1	5 400	6 300	3 000	6818	ZZ	LLB	LLU
	125	18	1.1	0.5	33.0	31.5	3 350	3 200	16.5	5 100	6 000	2 900	6918	ZZ	LLB	LLU
	140	16	1	—	33.5	33.5	3 400	3 400	16.5	4 700	5 600	—	16018	—	—	—
	140	24	1.5	0.5	58.0	49.5	5 950	5 050	15.6	4 700	5 600	2 800	6018	ZZ	LLB	LLU
	160	30	2	0.5	96.0	71.5	9 800	7 300	14.5	4 000	4 700	2 600	6218	ZZ	LLB	LLU
	190	43	3	0.5	143	107	14 500	10 900	13.3	3 600	4 200	2 400	6318	ZZ	LLB	LLU
95	120	13	1	0.5	19.3	20.5	1 970	2 090	16.1	5 000	5 900	2 800	6819	ZZ	LLB	LLU
	130	18	1.1	0.5	33.5	33.5	3 450	3 400	16.6	4 800	5 700	2 800	6919	ZZ	LLB	LLU
	145	16	1	—	34.5	35.0	3 500	3 550	16.5	4 500	5 300	—	16019	—	—	—
	145	24	1.5	0.5	60.5	54.0	6 150	5 500	15.8	4 500	5 300	2 600	6019	ZZ	LLB	LLU
	170	32	2.1	0.5	109	82.0	11 100	8 350	14.4	3 700	4 400	2 500	6219	ZZ	LLB	LLU
	200	45	3	0.5	153	119	15 600	12 100	13.3	3 300	3 900	2 300	6319	ZZ	—	LLU
100	125	13	1	0.5	19.6	21.2	2 000	2 160	16.0	4 800	5 600	2 700	6820	ZZ	LLB	LLU
	140	20	1.1	0.5	41.0	39.5	4 200	4 050	16.4	4 500	5 300	2 600	6920	ZZ	LLB	LLU
	150	16	1	—	35.0	36.5	3 600	3 750	16.4	4 200	5 000	—	16020	—	—	—
	150	24	1.5	0.5	60.0	54.0	6 150	5 500	15.9	4 200	5 000	2 600	6020	ZZ	LLB	LLU
	180	34	2.1	0.5	122	93.0	12 500	9 450	14.4	3 500	4 200	2 300	6220	ZZ	LLB	LLU
	215	47	3	—	173	141	17 600	14 400	13.2	3 200	3 700	2 200	6320	ZZ	—	LLU
105	130	13	1	0.5	19.8	22.0	2 020	2 240	15.9	4 600	5 400	—	6821	—	—	—
	145	20	1.1	0.5	42.5	42.0	4 300	4 300	16.5	4 300	5 100	2 500	6921	ZZ	LLB	LLU
	160	18	1	—	52.0	50.5	5 300	5 150	16.3	4 000	4 700	—	16021	—	—	—
	160	26	2	0.5	72.5	65.5	7 400	6 700	15.8	4 000	4 700	2 400	6021	ZZ	LLB	LLU
	190	36	2.1	0.5	133	105	13 600	10 700	14.4	3 400	4 000	2 300	6221	ZZ	—	LLU
	225	49	3	—	184	153	18 700	15 700	13.2	3 000	3 600	2 100	6321	ZZ	—	LLU
110	140	16	1	0.5	24.9	28.2	2 540	2 880	16.0	4 300	5 100	—	6822	—	—	—
	150	20	1.1	0.5	43.5	44.5	4 450	4 550	16.6	4 100	4 800	2 400	6922	ZZ	LLB	LLU
	170	19	1	—	57.5	56.5	5 850	5 800	16.3	3 800	4 500	—	16022	—	—	—
	170	28	2	0.5	82.0	73.0	8 350	7 450	15.6	3 800	4 500	2 300	6022	ZZ	LLB	LLU
	200	38	2.1	0.5	144	117	14 700	11 900	14.3	3 200	3 800	2 200	6222	ZZ	—	LLU
	240	50	3	—	205	179	20 900	18 300	13.1	2 900	3 400	1 900	6322	ZZ	—	LLU
120	150	16	1	0.5	28.9	33.0	2 950	3 350	16.0	4 000	4 700	—	6824	—	—	—
	165	22	1.1	0.5	53.0	54.0	5 400	5 500	16.5	3 800	4 400	—	6924	—	—	—
	180	19	1	—	63.0	63.5	6 450	6 450	16.4	3 500	4 100	—	16024	—	—	—
	180	28	2	0.5	85.0	79.5	8 650	8 100	15.9	3 500	4 100	2 100	6024	ZZ	LLB	LLU

1) Smallest allowable dimension for chamfer dimension r.

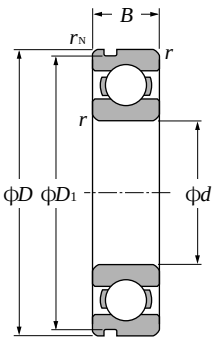

With snap ring groove

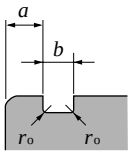

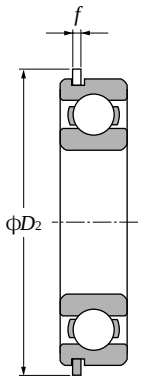

With snap ring

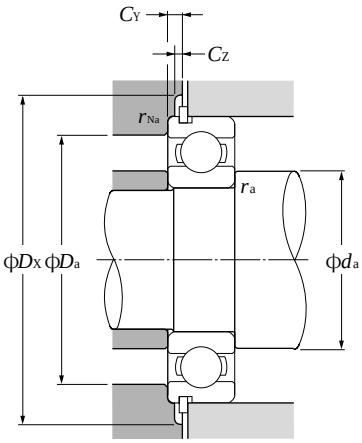

Dynamic equivalent radial load

$P_r = XF_r + YF_a$

$\frac{f_o \cdot F_a}{C_{or}}$	e	$\frac{F_a}{F_r} \leqq e$		$\frac{F_a}{F_r} > e$	
		X	Y	X	Y
0.172	0.19				2.30
0.345	0.22				1.99
0.689	0.26				1.71
1.03	0.28				1.55
1.38	0.30	1	0	0.56	1.45
2.07	0.34				1.31
3.45	0.38				1.15
5.17	0.42				1.04
6.89	0.44				1.00

Static equivalent radial load

$P_{or} = 0.6F_r + 0.5F_a$

When $P_{or} < F_r$ use $P_{or} = F_r$

Bearing numbers		Snap ring groove dimensions mm				Snap ring dimensions mm		Abutment and fillet dimensions mm								Mass[4] kg
snap[2] ring groove	snap[2] ring	D_1 max	a max	b min	r_o max	D_2 max	f max	d_a min	d_a max[3]	D_a max	D_X (approx.)	C_Y max	C_Z min	r_{as} max	r_{Nas} max	(approx.)
N	**NR**	112.6	2.1	1.3	0.4	120.7	1.12	95	96	110	122	2.9	1.2	1	0.5	0.285
N	**NR**	122.6	3.3	1.3	0.4	130.7	1.12	96.5	99	118.5	132	4.1	1.2	1	0.5	0.554
—	—	—	—	—	—	—	—	95	—	135	—	—	—	1	—	0.848
N	**NR**	135.23	3.71	3.1	0.6	149.7	2.82	98	102	132	152	6.1	2.9	1.5	0.5	1.02
N	**NR**	155.22	4.9	3.1	0.6	169.7	2.82	99	109	151	172	7.3	2.9	2	0.5	2.15
N	**NR**	183.64	5.69	3.5	0.6	202.9	3.1	103	118	177	205	8.4	3.1	2.5	0.5	4.91
N	**NR**	117.6	2.1	1.3	0.4	125.7	1.12	100	101	115	127	2.9	1.2	1	0.5	0.3
N	**NR**	127.6	3.3	1.3	0.4	135.7	1.12	101.5	104	123.5	137	4.1	1.2	1	0.5	0.579
—	—	—	—	—	—	—	—	100	—	140	—	—	—	1	—	0.885
N	**NR**	140.23	3.71	3.1	0.6	154.7	2.82	103	109	137	157	6.1	2.9	1.5	0.5	1.08
N	**NR**	163.65	5.69	3.5	0.6	182.9	3.1	106	116	159	185	8.4	3.1	2	0.5	2.62
N	**NR**	193.65	5.69	3.5	0.6	212.9	3.1	108	125	187	215	8.4	3.1	2.5	0.5	5.67
N	**NR**	122.6	2.1	1.3	0.4	130.7	1.12	105	106	120	132	2.9	1.2	1	0.5	0.313
N	**NR**	137.6	3.3	1.9	0.6	145.7	1.7	106.5	110	133.5	147	4.7	1.7	1	0.5	0.785
—	—	—	—	—	—	—	—	105	—	145	—	—	—	1	—	0.91
N	**NR**	145.24	3.71	3.1	0.6	159.7	2.82	108	110	142	162	6.1	2.9	1.5	0.5	1.15
N	**NR**	173.66	5.69	3.5	0.6	192.9	3.1	111	122	169	195	8.4	3.1	2	0.5	3.14
N	**NR**	208.6	5.69	3.5	1	**227.8**	3.1	113	133	202	230	8.4	3.1	2.5	0.5	7
N	**NR**	127.6	2.1	1.3	0.4	135.7	1.12	110	—	125	137	2.9	1.2	1	0.5	0.33
N	**NR**	142.6	3.3	1.9	0.6	150.7	1.7	111.5	115	138.5	152	4.7	1.7	1	0.5	0.816
—	—	—	—	—	—	—	—	110	—	155	—	—	—	1	—	1.2
N	**NR**	155.22	3.71	3.1	0.6	169.7	2.82	114	119	151	172	6.1	2.9	2	0.5	1.59
N	**NR**	183.64	5.69	3.5	0.6	202.9	3.1	116	125	179	205	8.4	3.1	2	0.5	3.7
N	**NR**	217.0	6.5	4.5	1	**237**	3.5	118	134	212	239	9.6	3.5	2.5	0.5	8.05
N	**NR**	137.6	2.5	1.9	0.6	145.7	1.7	115	—	135	147	3.9	1.7	1	0.5	0.515
N	**NR**	147.6	3.3	1.9	0.6	155.7	1.7	116.5	120	143.5	157	4.7	1.7	1	0.5	0.849
—	—	—	—	—	—	—	—	115	—	165	—	—	—	1	—	1.46
N	**NR**	163.65	3.71	3.5	0.6	182.9	3.1	119	126	161	185	6.4	3.1	2	0.5	1.96
N	**NR**	193.65	5.69	3.5	0.6	212.9	3.1	121	132	189	215	8.4	3.1	2	0.5	4.36
N	**NR**	232.0	6.5	4.5	1	**252**	3.5	123	149	227	254	9.6	3.5	2.5	0.5	9.54
N	**NR**	147.6	2.5	1.9	0.6	155.7	1.7	125	—	145	157	3.9	1.7	1	0.5	0.555
N	**NR**	161.8	3.7	1.9	0.6	171.5	1.7	126.5	—	158.5	173	5.1	1.7	1	0.5	1.15
—	—	—	—	—	—	—	—	125	—	175	—	—	—	1	—	1.56
N	**NR**	173.66	3.71	3.5	0.6	192.9	3.1	129	136	171	195	6.4	3.1	2	0.5	2.07

2）Sealed and shielded bearings are also available. 3）This dimension applies to sealed and shielded bearings. 4）Does not include bearings with snap rings.

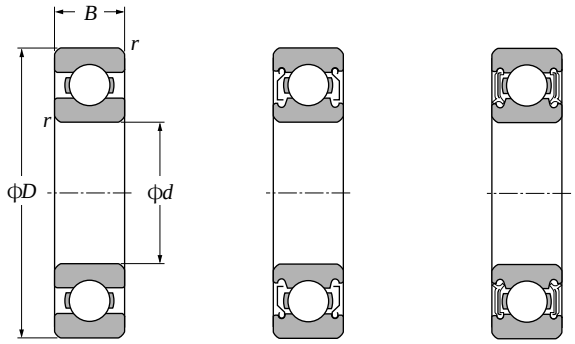

Open type | Shielded type (ZZ) | Contact sealed type (LLU)

d 120～170mm

Boundary dimensions					Basic load ratings				Factor	Limiting speeds			Bearing numbers		
					dynamic	static	dynamic	static			min^{-1}				
	mm				kN		kgf			grease	oil				
d	D	B	$r_{s\,min}$[1]	r_{NS} min	C_r	C_{or}	C_r	C_{or}	f_o	open type ZZ	open type Z	LLU	open type	shielded type	contact sealed type
120	215	40	2.1	—	155	131	15 900	13 400	14.4	2 900	3 400	2 000	**6224**	**ZZ**	**LLU**
	260	55	3	—	207	185	21 100	18 800	13.5	2 600	3 100	—	**6324**	—	—
130	165	18	1.1	0.5	37.0	41.0	3 750	4 200	16.1	3 700	4 300	—	**6826**	—	—
	180	24	1.5	0.5	65.0	67.5	6 650	6 850	16.5	3 500	4 100	—	**6926**	—	—
	200	22	1.1	—	80.0	79.5	8 150	8 100	16.2	3 200	3 800	—	**16026**	—	—
	200	33	2	0.5	106	101	10 800	10 300	15.8	3 200	3 800	1 900	**6026**	**ZZ**	**LLU**
	230	40	3	—	167	146	17 000	14 900	14.5	2 700	3 100	—	**6226**	—	—
	280	58	4	—	229	214	23 400	21 800	13.6	2 400	2 800	—	**6326**	—	—
140	175	18	1.1	0.5	38.5	44.5	3 900	4 550	16.0	3 400	4 000	—	**6828**	—	—
	190	24	1.5	0.5	66.5	71.5	6 800	7 300	16.6	3 200	3 800	—	**6928**	—	—
	210	22	1.1	—	82.0	85.0	8 350	8 650	16.4	3 000	3 500	—	**16028**	—	—
	210	33	2	—	110	109	11 200	11 100	15.9	3 000	3 500	1 800	**6028**	**ZZ**	**LLU**
	250	42	3	—	166	150	17 000	15 300	14.8	2 500	2 900	—	**6228**	—	—
	300	62	4	—	253	246	25 800	25 100	13.6	2 200	2 600	—	**6328**	—	—
150	190	20	1.1	0.5	47.5	55.0	4 850	5 600	16.1	3 100	3 700	—	**6830**	—	—
	210	28	2	—	85.0	90.5	8 650	9 200	16.5	3 000	3 500	—	**6930**	—	—
	225	24	1.1	—	96.5	101	9 850	10 300	16.4	2 800	3 200	—	**16030**	—	—
	225	35	2.1	—	126	126	12 800	12 800	15.9	2 800	3 200	1 700	**6030**	**ZZ**	**LLU**
	270	45	3	—	176	168	18 000	17 100	15.1	2 300	2 700	—	**6230**	—	—
	320	65	4	—	274	284	28 000	28 900	13.9	2 100	2 400	—	**6330**	—	—
160	200	20	1.1	0.5	48.5	57.0	4 950	5 800	16.1	2 900	3 400	—	**6832**	—	—
	220	28	2	—	87.0	96.0	8 850	9 800	16.6	2 800	3 300	—	**6932**	—	—
	240	25	1.5	—	99.0	108	10 100	11 000	16.5	2 600	3 000	—	**16032**	—	—
	240	38	2.1	—	143	144	14 500	14 700	15.9	2 600	3 000	1 600	**6032**	**ZZ**	**LLU**
	290	48	3	—	185	186	18 900	19 000	15.4	2 100	2 500	—	**6232**	—	—
	340	68	4	—	278	286	28 300	29 200	13.9	1 900	2 300	—	**6332**	—	—
170	215	22	1.1	—	60.0	70.5	6 100	7 200	16.1	2 700	3 200	—	**6834**	—	—
	230	28	2	—	86.0	95.5	8 750	9 750	16.5	2 600	3 100	—	**6934**	—	—
	260	28	1.5	—	119	128	12 100	13 100	16.4	2 400	2 800	—	**16034**	—	—
	260	42	2.1	—	168	172	17 200	17 600	15.8	2 400	2 800	—	**6034**	—	—
	310	52	4	—	212	223	21 700	22 800	15.3	2 000	2 400	—	**6234**	—	—
	360	72	4	—	325	355	33 500	36 000	13.6	1 800	2 100	—	**6334**	—	—

1) Smallest allowable dimension for chamfer dimension r.

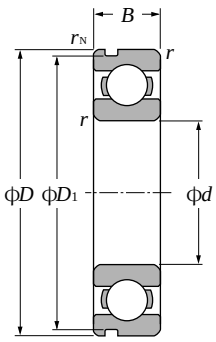

With snap ring groove

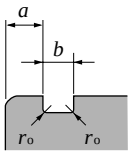

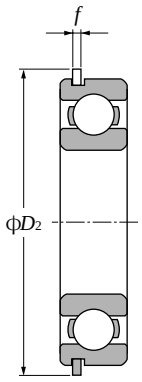

With snap ring

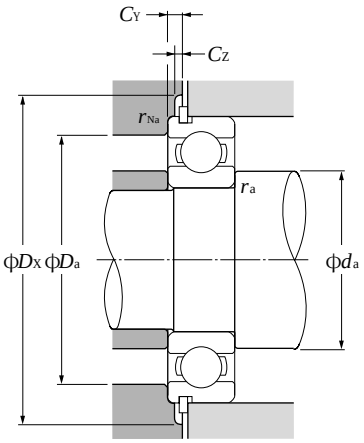

Dynamic equivalent radial load

$P_r = XF_r + YF_a$

$\frac{f_o \cdot F_a}{C_{or}}$	e	$\frac{F_a}{F_r} \leqq e$		$\frac{F_a}{F_r} > e$	
		X	Y	X	Y
0.172	0.19	1	0	0.56	2.30
0.345	0.22				1.99
0.689	0.26				1.71
1.03	0.28				1.55
1.38	0.30				1.45
2.07	0.34				1.31
3.45	0.38				1.15
5.17	0.42				1.04
6.89	0.44				1.00

Static equivalent radial load

$P_{or} = 0.6F_r + 0.5F_a$

When $P_{or} < F_r$ use $P_{or} = F_r$

Bearing numbers		Snap ring groove dimensions mm				Snap ring dimensions mm		Abutment and fillet dimensions mm								Mass[4] kg
snap[2] ring groove	snap[2] ring	D_1 max	a max	b min	r_o max	D_2 max	f max	d_a min	d_a max[3]	D_a max	D_X (approx.)	C_Y max	C_Z min	r_{as} max	r_{Nas} max	(approx.)
N	**NR**	217.0	6.5	4.5	1	227.8	3.1	131	143	204	230	9.2	3.1	2	0.5	5.15
—	—	—	—	—	—	—	—	133	—	247	—	—	—	2.5	—	12.4
N	**NR**	161.8	3.3	1.9	0.6	171.5	1.7	136.5	—	158.5	173	4.7	1.7	1	0.5	0.8
N	**NR**	176.8	3.7	1.9	0.6	186.5	1.7	138	—	172	188	5.1	1.7	1.5	0.5	1.52
—	—	—			—	—	—	136.5	—	193.5	—	—	—	1	—	2.31
N	**NR**	193.65	5.69	3.5	0.6	212.9	3.1	139	148	191	215	8.4	3.1	2	0.5	3.16
N	**NR**	222.0	6.5	4.5	1	242	3.5	143	—	217	244	9.6	3.5	2.5	0.5	5.82
—	—	—	—	—	—	—	—	146	—	264	—	—	—	3	—	15.3
N	**NR**	171.8	3.3	1.9	0.6	181.5	1.7	146.5	—	168.5	183	4.7	1.7	1	0.5	0.85
N	**NR**	186.8	3.7	1.9	0.6	196.5	1.7	148	—	182	198	5.1	1.7	1.5	0.5	1.62
—	—	—	—	—	—	—	—	146.5	—	203.5	—	—	—	1	—	2.45
—	—	—	—	—	—	—	—	149	158	201	—	—	—	2	—	3.35
N	**NR**	242.0	6.,5	4.5	1	262	3.5	153	—	237	264	9.6	3.5	2.5	0.5	7.57
—	—	—	—	—	—	—	—	156	—	284	—	—	—	3	—	18.5
N	**NR**	186.8	3.3	1.9	0.6	196.5	1.7	156.5	—	183.5	198	4.7	1.7	1	0.5	1.16
—	—	—	—	—	—	—	—	159	—	201	—	—	—	2	—	2.47
—	—	—	—	—	—	—	—	156.5	—	218.5	—	—	—	1	—	3.07
—	—	—	—	—	—	—	—	161	169	214	—	—	—	2	—	4.08
—	—	—	—	—	—	—	—	163	—	257	—	—	—	2.5	—	9.41
—	—	—	—	—	—	—	—	166	—	304	—	—	—	3	—	22
N	**NR**	196.8	3.3	1.9	0.6	206.5	1.7	166.5	—	193.5	208	4.7	1.7	1	0.5	1.23
—	—	—	—	—	—	—	—	169	—	211	—	—	—	2	—	2.61
—	—	—	—	—	—	—	—	168	—	232	—	—	—	1.5	—	3.64
—	—	—	—	—	—	—	—	171	183	229	—	—	—	2	—	5.05
—	—	—	—	—	—	—	—	173	—	277	—	—	—	2.5	—	11.7
—	—	—	—	—	—	—	—	176	—	324	—	—	—	3	—	26
—	—	—	—	—	—	—	—	176.5	—	208.5	—	—	—	1	—	1.63
—	—	—	—	—	—	—	—	179	—	221	—	—	—	2	—	2.74
—	—	—	—	—	—	—	—	178	—	252	—	—	—	1.5	—	4.93
—	—	—	—	—	—	—	—	181	—	249	—	—	—	2	—	6.76
—	—	—	—	—	—	—	—	186	—	294	—	—	—	3	—	14.5
—	—	—	—	—	—	—	—	186	—	344	—	—	—	3	—	30.7

2）Sealed and shielded bearings are also available.　3）This dimension applies to sealed and shielded bearings.　4）Does not include bearings with snap rings.

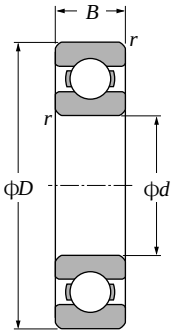

Open Type

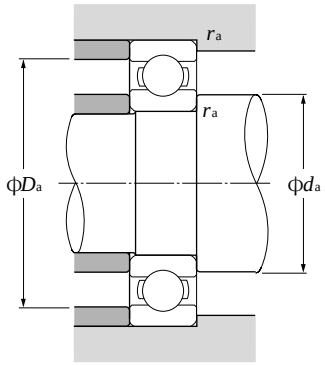

d 180～260mm

Boundary dimensions mm				Basic load ratings dynamic kN		Basic load ratings static kgf		Factor	Limiting speeds min-1		Bearing numbers
d	D	B	$r_{s\,min}$ 1)	C_r	C_{or}	C_r	C_{or}	f_o	grease lubrication	oil lubrication	open type
180	225	22	1.1	60.5	73.0	6 200	7 450	16.1	2 600	3 000	6836
	250	33	2	110	119	11 200	12 200	16.5	2 400	2 900	6936
	280	31	2	117	134	11 900	13 600	16.5	2 300	2 700	16036
	280	46	2.1	189	199	19 300	20 300	15.6	2 300	2 700	6036
	320	52	4	227	241	23 200	24 600	15.1	1 900	2 200	6236
	380	75	4	355	405	36 000	41 500	13.9	1 700	2 000	6336
190	240	24	1.5	73.0	88.0	7 450	9 000	16.1	2 400	2 900	6838
	260	33	2	113	127	11 500	13 000	16.6	2 300	2 700	6938
	290	31	2	134	156	13 700	15 900	16.6	2 100	2 500	16038
	290	46	2.1	197	215	20 100	21 900	15.8	2 100	2 500	6038
	340	55	4	255	281	26 000	28 700	15.0	1 800	2 100	6238
	400	78	5	355	415	36 000	42 500	14.1	1 600	1 900	6338
200	250	24	1.5	74.0	91.5	7 550	9 300	16.1	2 300	2 700	6840
	280	38	2.1	157	168	16 000	17 100	16.2	2 200	2 600	6940
	310	34	2	142	160	14 400	16 300	16.6	2 000	2 400	16040
	310	51	2.1	218	243	22 200	24 800	15.6	2 000	2 400	6040
	360	58	4	269	310	27 400	31 500	15.2	1 700	2 000	6240
	420	80	5	410	500	42 000	51 000	13.8	1 500	1 800	6340
220	270	24	1.5	76.5	98.0	7 800	10 000	16.0	2 100	2 400	6844
	300	38	2.1	160	180	16 400	18 400	16.4	2 000	2 300	6944
	340	37	2.1	181	216	18 500	22 000	16.5	1 800	2 200	16044
	340	56	3	241	289	24 600	29 400	15.8	1 800	2 200	6044
	400	65	4	297	365	30 500	37 000	15.3	1 500	1 800	6244
	460	88	5	410	520	42 000	53 000	14.3	1 400	1 600	6344
240	300	28	2	85.0	112	8 650	11 400	15.9	1 900	2 200	6848
	320	38	2.1	170	203	17 300	20 700	16.5	1 800	2 100	6948
	360	37	2.1	178	217	18 200	22 100	16.5	1 700	2 000	16048
	360	56	3	249	310	25 400	32 000	16.0	1 700	2 000	6048
260	320	28	2	87.0	120	8 900	12 200	15.8	1 700	2 000	6852
	360	46	2.1	222	280	22 600	28 500	16.3	1 600	1 900	6952
	400	44	3	227	299	23 200	30 500	16.5	1 500	1 800	16052
	400	65	4	291	375	29 700	38 500	15.8	1 500	1 800	6052

1) Smallest allowable dimension for chamfer dimension r.

Dynamic equivalent radial load

$P_r = XF_r + YF_a$

$\frac{f_0 \cdot F_a}{C_{or}}$	e	$\frac{F_a}{F_r} \leqq e$		$\frac{F_a}{F_r} > e$	
		X	Y	X	Y
0.172	0.19	1	0	0.56	2.30
0.345	0.22				1.99
0.689	0.26				1.71
1.03	0.28				1.55
1.38	0.30				1.45
2.07	0.34				1.31
3.45	0.38				1.15
5.17	0.42				1.04
6.89	0.44				1.00

Static equivalent radial load

$P_{or} = 0.6F_r + 0.5F_a$

When $P_{or} < F_r$ use $P_{or} = F_r$

Abutment and fillet dimensions mm			**Mass** kg
d_a min	D_a max	r_{as} max	(approx.)
186.5	218.5	1	2.03
189	241	2	4.76
189	271	2	6.49
191	269	2	8.8
196	304	3	15.1
196	364	3	35.6
198	232	1.5	2.62
199	251	2	4.98
199	281	2	6.77
201	279	2	9.18
206	324	3	18.2
210	380	4	41
208	242	1.5	2.73
211	269	2	7.1
209	301	2	8.68
211	299	2	11.9
216	344	3	21.6
220	400	4	46.3
228	262	1.5	3
231	289	2	7.69
231	329	2	11.3
233	327	2.5	15.7
236	384	3	30.2
240	440	4	60.8
249	291	2	4.6
251	309	2	8.28
251	349	2	12.1
253	347	2.5	16.8
269	311	2	5
271	349	2	13.9
273	387	2.5	18.5
276	384	3	25

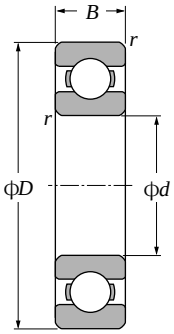

Open Type

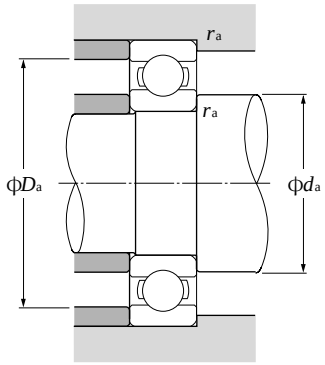

d 280～440mm

Boundary dimensions mm				Basic load ratings dynamic kN		Basic load ratings static kgf		Factor	Limiting speeds min-1		Bearing numbers
d	D	B	$r_{s\,min}$ 1)	C_r	C_{or}	C_r	C_{or}	f_o	grease lubrication	oil lubrication	open type
280	350	33	2	137	177	13 900	18 100	16.1	1 600	1 900	6856
	380	46	2.1	227	299	23 200	30 500	16.5	1 500	1 800	6956
	420	44	3	232	315	23 700	32 500	16.5	1 400	1 600	16056
	420	65	4	325	420	33 000	43 000	15.5	1 400	1 600	6056
300	380	38	2.1	162	210	16 500	21 500	16.1	1 500	1 700	6860
	420	56	3	276	375	28 200	38 500	16.2	1 400	1 600	6960
	460	50	4	292	410	29 800	42 000	16.3	1 300	1 500	16060
	460	74	4	355	480	36 000	49 000	15.6	1 300	1 500	6060
320	400	38	2.1	168	228	17 200	23 200	16.1	1 400	1 600	6864
	440	56	3	285	405	29 000	41 000	16.4	1 300	1 500	6964
	480	50	4	300	440	30 500	45 000	16.4	1 200	1 400	16064
	480	74	4	370	530	38 000	54 000	15.7	1 200	1 400	6064
340	420	38	2.1	170	236	17 400	24 000	16.0	1 300	1 500	6868
	460	56	3	293	430	29 800	44 000	16.5	1 200	1 400	6968
	520	57	4	340	515	35 000	52 500	16.3	1 100	1 300	16068
	520	82	5	420	610	42 500	62 500	15.6	1 100	1 300	6068
360	440	38	2.1	187	258	19 100	26 300	16.0	1 200	1 400	6872
	480	56	3	300	455	30 500	46 500	16.5	1 100	1 300	6972
	540	57	4	350	550	36 000	56 000	16.4	1 100	1 200	16072
	540	82	5	440	670	44 500	68 000	15.7	1 100	1 200	6072
380	480	46	2.1	231	340	23 600	34 500	16.1	1 100	1 300	6876
	520	65	4	325	510	33 000	52 000	16.6	1 100	1 200	6976
	560	82	5	455	725	46 500	74 000	15.9	990	1 200	6076
400	500	46	2.1	226	340	23 100	34 500	16.0	1 100	1 200	6880
	540	65	4	335	535	34 000	54 500	16.5	990	1 200	6980
	600	90	5	510	825	52 000	84 000	15.7	930	1 100	6080
420	520	46	2.1	260	405	26 500	41 500	16.1	1 000	1 200	6884
	560	65	4	340	560	35 000	57 000	16.4	940	1 100	6984
	620	90	5	530	895	54 000	91 000	15.8	880	1 000	6084
440	540	46	2.1	264	420	26 900	43 000	16.0	950	1 100	6888
	600	74	4	365	615	37 500	63 000	16.4	890	1 000	6988

1) Smallest allowable dimension for chamfer dimension r.

Dynamic equivalent radial load

$P_r = XF_r + YF_a$

$\frac{f_0 \cdot F_a}{C_{or}}$	e	$\frac{F_a}{F_r} \leqq e$		$\frac{F_a}{F_r} > e$	
		X	Y	X	Y
0.172	0.19	1	0	0.56	2.30
0.345	0.22				1.99
0.689	0.26				1.71
1.03	0.28				1.55
1.38	0.30				1.45
2.07	0.34				1.31
3.45	0.38				1.15
5.17	0.42				1.04
6.89	0.44				1.00

Static equivalent radial load

$P_{or} = 0.6F_r + 0.5F_a$

When $P_{or} < F_r$ use $P_{or} = F_r$

Abutment and fillet dimensions mm			**Mass** kg
d_a min	D_a max	r_{as} max	(approx.)
289	341	2	7.4
291	369	2	14.8
293	407	2.5	23
296	404	3	31
311	369	2	10.5
313	407	2.5	23.5
316	444	3	32.5
316	444	3	43.8
331	389	2	10.9
333	427	2.5	24.8
336	464	3	34.2
336	464	3	46.1
351	409	2	11.5
353	447	2.5	26.2
356	504	3	47.1
360	500	4	61.8
371	429	2	12.3
373	467	2.5	27.5
376	524	3	49.3
380	520	4	64.7
391	469	2	19.7
396	504	3	39.8
400	540	4	67.5
411	489	2	20.6
416	524	3	41.6
420	580	4	87.6
431	509	2	21.6
436	544	3	43.4
440	600	4	91.1
451	529	2	22.5
456	584	3	60

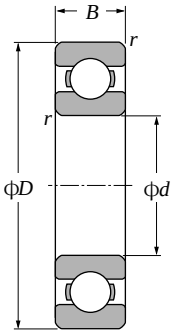

Open Type

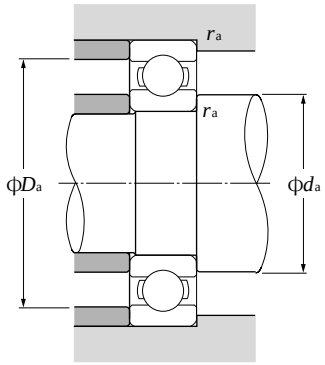

d 460～600mm

Boundary dimensions				Basic load ratings				Factor	Limiting speeds		Bearing numbers
				dynamic	static	dynamic	static		min^{-1}		
mm				kN		kgf					
d	D	B	$r_{s\,min}$[1)]	C_r	C_{or}	C_r	C_{or}	f_o	grease lubrication	oil lubrication	open type
460	580	56	3	315	515	32 000	52 500	16.2	900	1 100	**6892**
	620	74	4	375	645	38 500	66 000	16.4	850	1 000	**6992**
480	600	56	3	320	540	32 500	55 000	16.1	860	1 000	**6896**
	650	78	5	430	770	44 000	78 500	16.5	810	950	**6996**
500	620	56	3	325	560	33 500	57 000	16.1	820	970	**68/500**
	670	78	5	445	805	45 500	82 500	16.5	770	910	**69/500**
530	650	56	3	330	580	34 000	59 500	16.0	770	900	**68/530**
560	680	56	3	335	600	34 000	61 500	16.0	710	840	**68/560**
600	730	60	3	375	705	38 500	72 000	16.0	660	780	**68/600**

1) Smallest allowable dimension for chamfer dimension r.

Dynamic equivalent radial load

$P_r = XF_r + YF_a$

$\frac{f_0 \cdot F_a}{C_{or}}$	e	$\frac{F_a}{F_r} \leqq e$		$\frac{F_a}{F_r} > e$	
		X	Y	X	Y
0.172	0.19	1	0	0.56	2.30
0.345	0.22				1.99
0.689	0.26				1.71
1.03	0.28				1.55
1.38	0.30				1.45
2.07	0.34				1.31
3.45	0.38				1.15
5.17	0.42				1.04
6.89	0.44				1.00

Static equivalent radial load

$P_{or} = 0.6F_r + 0.5F_a$

When $P_{or} < F_r$ use $P_{or} = F_r$

Abutment and fillet dimensions mm			**Mass** kg
d_a min	D_a max	r_{as} max	(approx.)
473	567	2.5	34.8
476	604	3	62.2
493	587	2.5	36.2
500	630	4	73.0
513	607	2.5	37.5
520	650	4	75.5
543	637	2.5	39.5
573	667	2.5	41.5
613	717	2.5	51.7

Expansion Compensating Bearings

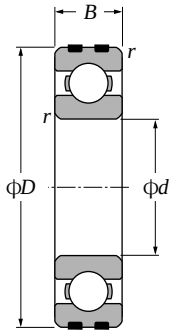

Open type

Shielded type (ZZ)

Non-contact sealed type (LLB)

Contact sealed type (LLU)

d 10～50mm

Boundary dimensions				Basic load ratings				Allowable load		Factor	Limiting speeds			Bearing numbers			
				dynamic	static	dynamic	static				min^{-1}					non-[1]	
mm				kN		kgf		kN	kgf		grease open type ZZ,LLB	oil open type Z,LB	LU,LLU	open type	shielded[1] type	contact sealed type	contact sealed type
d	*D*	*B*	$r_{s\,min}$[2]	C_r	C_{or}	C_r	C_{or}	C_p	C_p	f_o							
10	26	8	0.3	4.55	1.96	465	200	1.65	168	12.4	29 000	34 000	21 000	**EC-6000**	**ZZ**	**LLB**	**LLU**
	30	9	0.6	5.10	2.39	520	244	2.39	244	13.2	25 000	30 000	18 000	**EC-6200**	**ZZ**	**LLB**	**LLU**
	35	11	0.6	8.20	3.50	835	355	3.45	355	11.4	23 000	27 000	16 000	**EC-6300**	**ZZ**	**LLB**	**LLU**
12	28	8	0.3	5.10	2.39	520	244	1.78	181	13.2	26 000	30 000	18 000	**EC-6001**	**ZZ**	**LLB**	**LLU**
	32	10	0.6	6.10	2.75	620	280	2.29	233	12.7	22 000	26 000	16 000	**EC-6201**	**ZZ**	**LLB**	**LLU**
	37	12	1	9.70	4.20	990	425	3.65	375	11.1	20 000	24 000	15 000	**EC-6301**	**ZZ**	**LLB**	**LLU**
15	32	9	0.3	5.60	2.83	570	289	2.83	289	13.9	22 000	26 000	15 000	**EC-6002**	**ZZ**	**LLB**	**LLU**
	35	11	0.6	7.75	3.60	790	365	2.78	284	12.7	19 000	23 000	15 000	**EC-6202**	**ZZ**	**LLB**	**LLU**
	42	13	1	11.4	5.45	1 170	555	4.40	450	12.3	17 000	21 000	12 000	**EC-6302**	**ZZ**	**LLB**	**LLU**
17	35	10	0.3	6.80	3.35	695	345	2.88	294	13.6	20 000	24 000	14 000	**EC-6003**	**ZZ**	**LLB**	**LLU**
	40	12	0.6	9.60	4.60	980	465	3.45	350	12.8	18 000	21 000	12 000	**EC-6203**	**ZZ**	**LLB**	**LLU**
	47	14	1	13.5	6.55	1 380	665	6.55	665	12.2	16 000	19 000	11 000	**EC-6303**	**ZZ**	**LLB**	**LLU**
20	42	12	0.6	9.40	5.05	955	515	5.05	515	13.9	18 000	21 000	11 000	**EC-6004**	**ZZ**	**LLB**	**LLU**
	47	14	1	12.8	6.65	1 310	680	5.05	515	13.2	16 000	18 000	10 000	**EC-6204**	**ZZ**	**LLB**	**LLU**
	52	15	1.1	15.9	7.90	1 620	805	7.90	805	12.4	14 000	17 000	10 000	**EC-6304**	**ZZ**	**LLB**	**LLU**
25	47	12	0.6	10.1	5.85	1 030	595	5.85	595	14.5	15 000	18 000	9 400	**EC-6005**	**ZZ**	**LLB**	**LLU**
	52	15	1	14.0	7.85	1 430	800	6.55	665	13.9	13 000	15 000	8 900	**EC-6205**	**ZZ**	**LLB**	**LLU**
	62	17	1.1	21.2	10.9	2 160	1 110	10.9	1 110	12.6	12 000	14 000	8 100	**EC-6305**	**ZZ**	**LLB**	**LLU**
30	55	13	1	13.2	8.30	1 350	845	8.30	845	14.8	13 000	15 000	7 700	**EC-6006**	**ZZ**	**LLB**	**LLU**
	62	16	1	19.5	11.3	1 980	1 150	9.85	1 000	13.8	11 000	13 000	7 300	**EC-6206**	**ZZ**	**LLB**	**LLU**
	72	19	1.1	26.7	15.0	2 720	1 530	15.0	1 530	13.3	10 000	12 000	6 600	**EC-6306**	**ZZ**	**LLB**	**LLU**
35	62	14	1	16.0	10.3	1 630	1 050	10.3	1 050	14.8	12 000	14 000	6 800	**EC-6007**	**ZZ**	**LLB**	**LLU**
	72	17	1.1	25.7	15.3	2 620	1 560	14.5	1 480	13.8	9 800	11 000	6 300	**EC-6207**	**ZZ**	**LLB**	**LLU**
	80	21	1.5	33.5	19.1	3 400	1 950	18.5	1 890	13.1	8 800	10 000	6 000	**EC-6307**	**ZZ**	**LLB**	**LLU**
40	68	15	1	16.8	11.5	1 710	1 170	11.5	1 170	15.2	10 000	12 000	6 100	**EC-6008**	**ZZ**	**LLB**	**LLU**
	80	18	1.1	29.1	17.8	2 970	1 820	17.5	1 780	14.0	8 700	10 000	5 600	**EC-6208**	**ZZ**	**LLB**	**LLU**
	90	23	1.5	40.5	24.0	4 150	2 450	23.4	2 380	13.2	7 800	9 200	5 300	**EC-6308**	**ZZ**	**LLB**	**LLU**
45	75	16	1	21.0	15.1	2 140	1 540	15.1	1 540	15.3	9 200	11 000	5 400	**EC-6009**	**ZZ**	**LLB**	**LLU**
	85	19	1.1	32.5	20.4	3 350	2 080	20.3	2 070	14.1	7 800	9 200	5 200	**EC-6209**	**ZZ**	**LLB**	**LLU**
	100	25	1.5	53.0	32.0	5 400	3 250	27.4	2 790	13.1	7 000	8 200	4 700	**EC-6309**	**ZZ**	**LLB**	**LLU**
50	80	16	1	21.8	16.6	2 230	1 690	16.6	1 690	15.5	8 400	9 800	5 000	**EC-6010**	**ZZ**	**LLB**	**LLU**
	90	20	1.1	35.0	23.2	3 600	2 370	17.7	1 810	14.4	7 100	8 300	4 700	**EC-6210**	**ZZ**	**LLB**	**LLU**
	110	27	2	62.0	38.5	6 300	3 900	33.0	3 350	13.2	6 400	7 500	4 200	**EC-6310**	**ZZ**	**LLB**	**LLU**

1）This bearing number is for double sealed and double shielded type bearings, but single sealed and single shielded type are also available. 2）Smallest allowable dimension for chamfer dimension *r*.

Expansion Compensating Bearings

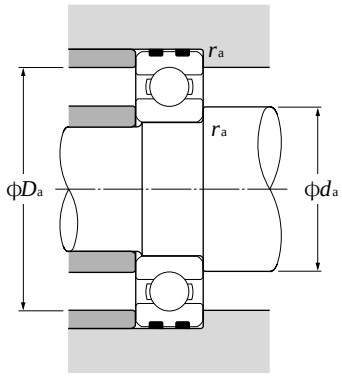

Dynamic equivalent radial load

$P_r = XF_r + YF_a$

$\frac{f_0 \cdot F_a}{C_{or}}$	e	$\frac{F_a}{F_r} \leqq e$		$\frac{F_a}{F_r} > e$	
		X	Y	X	Y
0.172	0.19	1	0	0.56	2.30
0.345	0.22				1.99
0.689	0.26				1.71
1.03	0.28				1.55
1.38	0.30				1.45
2.07	0.34				1.31
3.45	0.38				1.15
5.17	0.42				1.04
6.89	0.44				1.00

Static equivalent radial load

$P_{or} = 0.6F_r + 0.5F_a$

When $P_{or} < F_r$ use $P_{or} = F_r$

Abutment and fillet dimensions mm				Mass kg
d_a		D_a	r_{as}	open type
min	max[3)]	max	max	(approx.)
12	13.5	24	0.3	0.019
14	16	26	0.6	0.031
14	17	31	0.6	0.051
14	16	26	0.3	0.021
16	17.5	28	0.6	0.036
17	18.5	32	1	0.058
17	19	30	0.3	0.029
19	20.5	31	0.6	0.043
20	23	37	1	0.079
19	21	33	0.3	0.037
21	23	36	0.6	0.062
22	25	42	1	0.11
24	26	38	0.6	0.066
25	28	42	1	0.101
26.5	28.5	45.5	1	0.139
29	30.5	43	0.6	0.075
30	32	47	1	0.122
31.5	35	55.5	1	0.223
35	37	50	1	0.11
35	39	57	1	0.191
36.5	43	65.5	1	0.334
40	42	57	1	0.148
41.5	45	65.5	1	0.277
43	47	72	1.5	0.44
45	47	63	1	0.183
46.5	51	73.5	1	0.352
48	54	82	1.5	0.609
50	52.5	70	1	0.233
51.5	55.5	78.5	1	0.391
53	61.5	92	1.5	0.80
55	57.5	75	1	0.246
56.5	60	83.5	1	0.444
59	68.5	101	2	1.03

3) This dimension applies to sealed and shielded bearings.

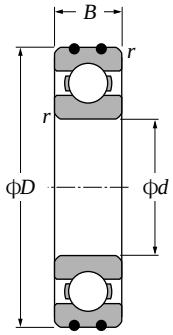

Open type

Shielded type (ZZ)

Non-contact sealed type (LLB)

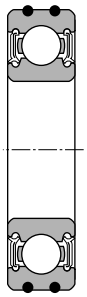

Contact sealed type (LLU)

d 10～45mm

Boundary dimensions				Basic load ratings				Allowable load		Factor	Limiting speeds			Bearing numbers			
				dynamic	static	dynamic	static				min^{-1}					non-[1]	
mm				kN		kgf		kN	kgf		grease open type ZZ,LLB	oil open type Z,LB	LU,LLU	open type	shielded type[1]	contact sealed type	contact sealed type
d	*D*	*B*	$r_{s\,min}$[2]	C_r	C_{or}	C_r	C_{or}	C_p	C_p	f_o							
10	26	8	0.3	4.55	1.96	465	200	1.53	156	12.4	29 000	34 000	21 000	**AC-6000**	**ZZ**	**LLB**	**LLU**
	30	9	0.6	5.10	2.39	520	244	2.39	244	13.2	25 000	30 000	18 000	**AC-6200**	**ZZ**	**LLB**	**LLU**
	35	11	0.6	8.20	3.50	835	355	2.98	305	11.4	23 000	27 000	16 000	**AC-6300**	**ZZ**	**LLB**	**LLU**
12	28	8	0.3	5.10	2.39	520	244	1.73	177	13.2	26 000	30 000	18 000	**AC-6001**	**ZZ**	**LLB**	**LLU**
	32	10	0.6	6.10	2.75	620	280	2.75	280	12.7	22 000	26 000	16 000	**AC-6201**	**ZZ**	**LLB**	**LLU**
	37	12	1	9.70	4.20	990	425	3.00	310	11.1	20 000	24 000	15 000	**AC-6301**	**ZZ**	**LLB**	**LLU**
15	32	9	0.3	5.60	2.83	570	289	2.43	247	13.9	22 000	26 000	15 000	**AC-6002**	**ZZ**	**LLB**	**LLU**
	35	11	0.6	7.75	3.60	790	365	2.71	277	12.7	19 000	23 000	15 000	**AC-6202**	**ZZ**	**LLB**	**LLU**
	42	13	1	11.4	5.45	1 170	555	3.90	400	12.3	17 000	21 000	12 000	**AC-6302**	**ZZ**	**LLB**	**LLU**
17	35	10	0.3	6.80	3.35	695	345	2.44	249	13.6	20 000	24 000	14 000	**AC-6003**	**ZZ**	**LLB**	**LLU**
	40	12	0.6	9.60	4.60	980	465	3.50	355	12.8	18 000	21 000	12 000	**AC-6203**	**ZZ**	**LLB**	**LLU**
	47	14	1	13.5	6.55	1 380	665	5.10	520	12.2	16 000	19 000	11 000	**AC-6303**	**ZZ**	**LLB**	**LLU**
20	42	12	0.6	9.40	5.05	955	515	3.80	385	13.9	18 000	21 000	11 000	**AC-6004**	**ZZ**	**LLB**	**LLU**
	47	14	1	12.8	6.65	1 310	680	4.20	430	13.2	16 000	18 000	10 000	**AC-6204**	**ZZ**	**LLB**	**LLU**
	52	15	1.1	15.9	7.90	1 620	805	5.40	550	12.4	14 000	17 000	10 000	**AC-6304**	**ZZ**	**LLB**	**LLU**
25	47	12	0.6	10.1	5.85	1 030	595	4.50	460	14.5	15 000	18 000	9 400	**AC-6005**	**ZZ**	**LLB**	**LLU**
	52	15	1	14.0	7.85	1 430	800	5.80	590	13.9	13 000	15 000	8 900	**AC-6205**	**ZZ**	**LLB**	**LLU**
	62	17	1.1	21.2	10.9	2 160	1 110	7.30	745	12.6	12 000	14 000	8 100	**AC-6305**	**ZZ**	**LLB**	**LLU**
30	55	13	1	13.2	8.30	1 350	845	6.85	695	14.8	13 000	15 000	7 700	**AC-6006**	**ZZ**	**LLB**	**LLU**
	62	16	1	19.5	11.3	1 980	1 150	7.55	770	13.8	11 000	13 000	7 300	**AC-6206**	**ZZ**	**LLB**	**LLU**
	72	19	1.1	26.7	15.0	2 720	1 530	11.0	1 120	13.3	10 000	12 000	6 600	**AC-6306**	**ZZ**	**LLB**	**LLU**
35	62	14	1	16.0	10.3	1 630	1 050	8.95	910	14.8	12 000	14 000	6 800	**AC-6007**	**ZZ**	**LLB**	**LLU**
	72	17	1.1	25.7	15.3	2 620	1 560	9.65	985	13.8	9 800	11 000	6 300	**AC-6207**	**ZZ**	**LLB**	**LLU**
	80	21	1.5	33.5	19.1	3 400	1 950	13.4	1 360	13.1	8 800	10 000	6 000	**AC-6307**	**ZZ**	**LLB**	**LLU**
40	80	18	1.1	29.1	17.8	2 970	1 820	11.6	1 190	14.0	8 700	10 000	5 600	**AC-6208**	**ZZ**	**LLB**	**LLU**
	90	23	1.5	40.5	24.0	4 150	2 450	16.6	1 690	13.2	7 800	9 200	5 300	**AC-6308**	**ZZ**	**LLB**	**LLU**
45	85	19	1.1	32.5	20.4	3 350	2 080	14.7	1 500	14.1	7 800	9 200	5 200	**AC-6209**	**ZZ**	**LLB**	**LLU**
	100	25	1.5	53.0	32.0	5 400	3 250	21.8	2 200	13.1	7 000	8 200	4 700	**AC-6309**	**ZZ**	**LLB**	**LLU**

1）This bearing number is for double sealed and double shielded type bearings, but single sealed and single shielded type are also available. 2）Smallest allowable dimension for chamfer dimension *r*.

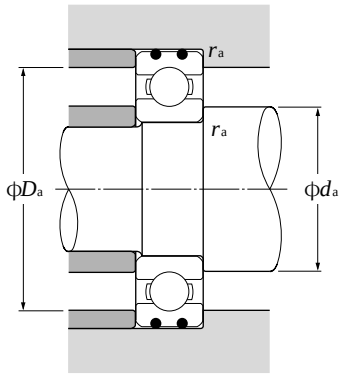

Dynamic equivalent radial load

$P_r = XF_r + YF_a$

$\frac{f_0 \cdot F_a}{C_{or}}$	e	$\frac{F_a}{F_r} \leqq e$		$\frac{F_a}{F_r} > e$	
		X	Y	X	Y
0.172	0.19	1	0	0.56	2.30
0.345	0.22				1.99
0.689	0.26				1.71
1.03	0.28				1.55
1.38	0.30				1.45
2.07	0.34				1.31
3.45	0.38				1.15
5.17	0.42				1.04
6.89	0.44				1.00

Static equivalent radial load

$P_{or} = 0.6F_r + 0.5F_a$

When $P_{or} < F_r$ use $P_{or} = F_r$

Abutment and fillet dimensions mm				Mass kg
d_a		D_a	r_{as}	open type
min	max[3)]	max	max	(approx.)
12	13.5	24	0.3	0.019
14	16	26	0.6	0.031
14	17	31	0.6	0.051
14	16	26	0.3	0.021
16	17.5	28	0.6	0.036
17	18.5	32	1	0.058
17	19	30	0.3	0.029
19	20.5	31	0.6	0.043
20	23	37	1	0.079
19	21	33	0.3	0.037
21	23	36	0.6	0.062
22	25	42	1	0.11
24	26	38	0.6	0.066
25	28	42	1	0.101
26.5	28.5	45.5	1	0.139
29	30.5	43	0.6	0.075
30	32	47	1	0.122
31.5	35	55.5	1	0.223
35	37	50	1	0.11
35	39	57	1	0.191
36.5	43	65.5	1	0.334
40	42	57	1	0.148
41.5	45	65.5	1	0.277
43	47	72	1.5	0.44
46.5	51	73.5	1	0.352
48	54	82	1.5	0.609
51.5	55.5	78.5	1	0.391
53	61.5	92	1.5	0.80

3) This dimension applies to sealed and shielded bearings.

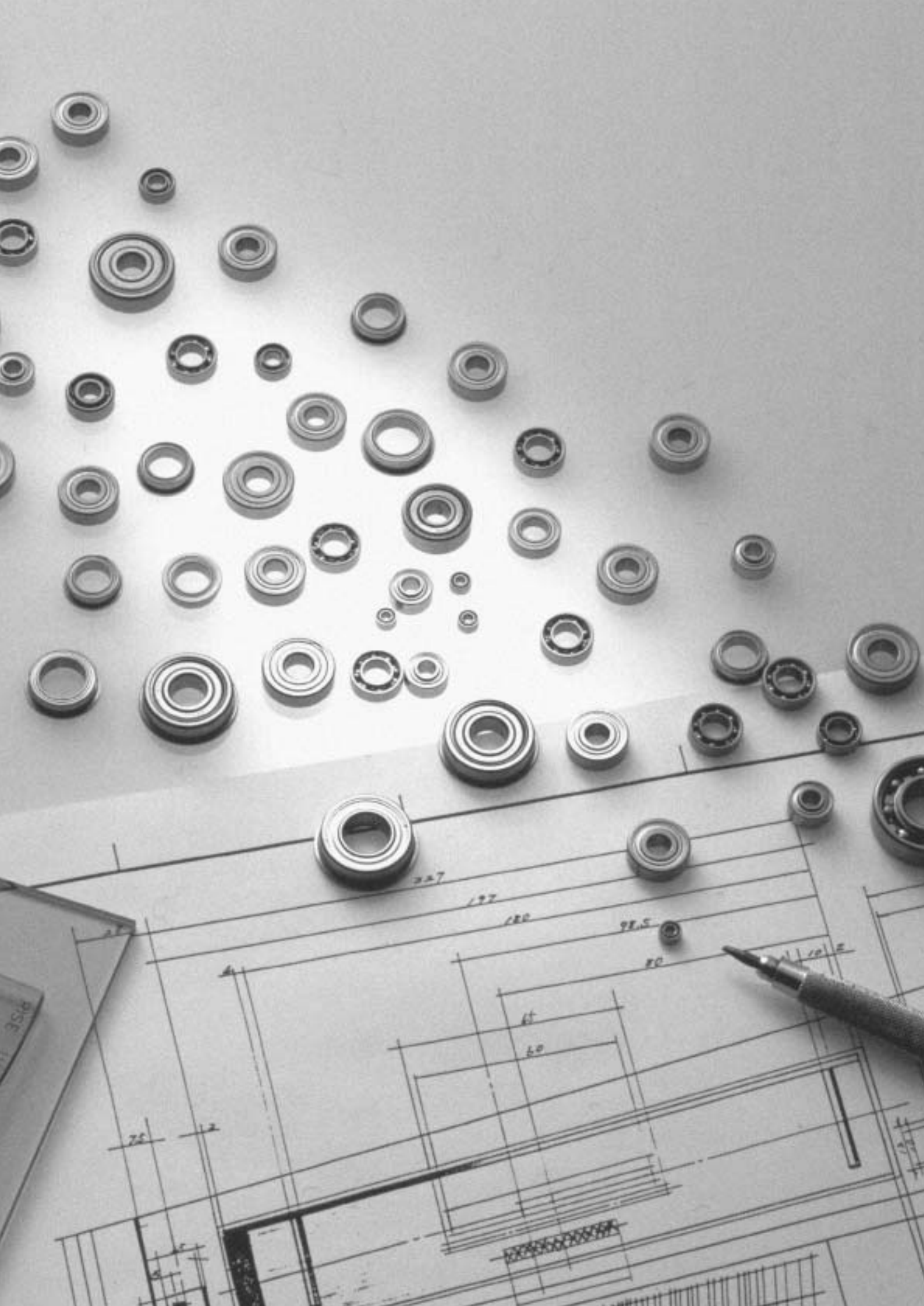

Open type

Shielded type

Shielded type with snap ring

1. Design features and special characteristics

The dimensional range of miniature and extra small ball bearings is given in **Table 1**. Boundary dimensions for both metric and inch systems are in accordance with the internationally specified ISO and ANSI/ABMA standards. The most widely used sealed and shielded type ball bearings have a 1–2 mm wider width dimension than open type bearings.

The main variations of these bearings are shown in **Table 2**. Bearings with snap rings, which simplify the bearing housing construction and design, have also been serialized and are listed in dimension tables. Among the most generally used sealed and shielded bearings are standard ZZ and ZZA type which incorporate non-contact steel shield plates. **Diagram 1** also shows non-contact type rubber sealed LLB and resin sealed SSA type bearings, and the contact-type rubber sealed LLU bearing.

Table 1 Dimensional range

Bearing	Dimensional range
Miniature ball bearings	Nominal outer diameter D<9mm
Extra small ball bearings	Nominal bore diameter d<10mm Nominal outer diameter D≧9mm

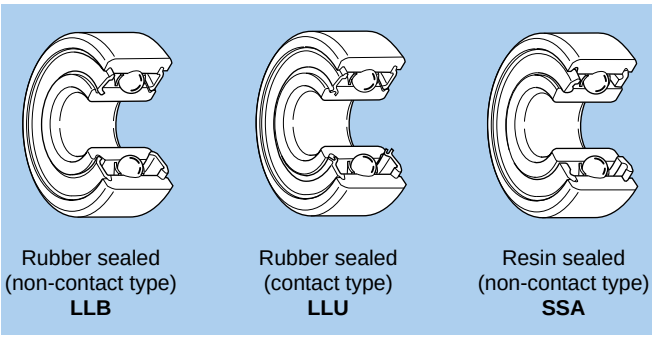

Diagram 1.

Table 2 Main types and construction

Type	Standard type code			Flange-attached type code		
	Construction	Metric series	Inch series	Construction	Metric series	Inch series
Open type		6 BC	R	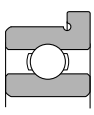	FL6 FLBC	FLR
Shielded type	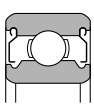	6 x x ZZ W6 x x ZZ WBC x x x ZZ	RA x x ZZ	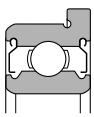	FL6 x x x ZZ FLW6 x x x ZZ FLWBC x x ZZ	FLRA x x ZZ

Note: 1. Representative type codes are shown. For further details, please refer to dimension tables.
2. May change to ZA or SA for shielded type bearings, according to the bearing number.

2. Standard cage types

Pressed cage are standard for these bearings. However, molded resin cage are used for some bearings depending on the application.

3. Dimensional and rotational accuracy

The accuracy of miniature and extra small ball bearings complies with JIS standards. Accuracy standards are listed in the Bearings Tolerances clause on page A-35. Flange accuracies are listed in **Table 3**.

Table 3 Tolerance and tolerance values for outer ring flange

Units μm

Accuracy class		Outer diameter dimensional tolerance Δ_{D1s} or Δ_{D2s} Upper Lower	Outer ring surface runout for rear surface S_{D1} Max.	Back face axial runout S_{ea1} Max.	Width dimension tolerance Δ_{C1s} or Δ_{C2s} Upper Lower	Width unevenness V_{C1s} or V_{C2s} Max.
ISO standard	Class 0	∗ (see table below)	—	—	Identical to same bearing's inner ring V_{Bs}	Identical to same bearing's inner ring V_{Bs}
	Class 6		—	—		
	Class 5		8	11		5
	Class 4		4	7		2.5
	Class 2		1.5	3 ❶ 4		1.5

❶ Nominal outer diameter, 18 mm or less.

∗ Units μm

Flange nominal outer diameter D_1 or D_2 mm over	incl.	Outer diameter dimensional tolerance Δ_{D1s} or Δ_{D2s} Upper	Lower
—	10	+220	−36
10	18	+270	−43
18	30	+330	−52
30	50	+390	−62

4. Radial internal clearance

Radial internal clearance values should be applied as listed in the table regarding the Bearing Internal Clearance and Preload clause on page A-58.

However, for miniature and extra small bearings, the radial clearance values for high precision bearings given in **Table 4** are applied in many cases.

For more specific selection information, please refer to the NTN Miniature and Extra Small Ball Bearings Catalog, or contact NTN Engineering.

Table 4 Radial internal clearance for high precision bearings

Units μm

MIL Standard	Tight				Standard						Loose		Extra Loose	
Code	C2S		CNS		CNM		CNL		C3S		C3M		C3L	
Internal clearance	Min.	Max.	Min.	Max.	Min.	Max.	Min.	Max.	Min.	Max.	Min.	Max.	Min.	Max.
	0	5	3	8	5	10	8	13	10	15	13	20	20	28

Note: 1. These standards are specified in accordance with MIL B-23063. However, NTN codes are shown.
2. Clearance values do not include compensation for measuring load.

Metric series

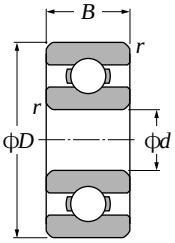

Open type

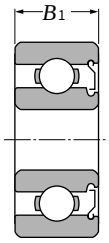

With single shield (Z)

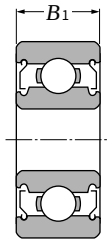

With double shield (ZZ)

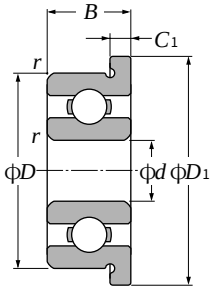

Open type with flange (FL)

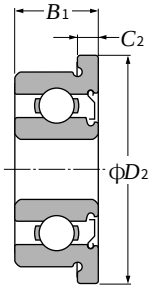

With flanged outer ring and single shield (FL···Z)

d 1.5 ～ 5mm

Boundary dimensions									Basic load ratings				Factor	Limiting speeds	
									dynamic	static	dynamic	static			
mm									N		kgf			min^{-1}	
d	*D*	*B*	B_1	D_1	D_2	C_1	C_2	$r_{s\,min}$ 1)	C_r	C_{or}	C_r	C_{or}	f_o	grease	oil
1.5	4	1.2	2	5	5	0.4	0.6	0.15	102	29.0	10.0	3.00	13.6	88 000	100 000
	5	2	2.6	6.5	6.5	0.6	0.8	0.15	171	51.0	17.0	5.00	13.3	79 000	93 000
	6	2.5	3	7.5	7.5	0.6	0.8	0.15	274	86.0	28.0	9.00	12.3	71 000	84 000
2	4	1.2	2	—	—	—	—	0.05	104	37.0	11.0	4.00	14.8	83 000	98 000
	5	1.5	2.3	6.1	6.1	0.5	0.6	0.08	171	51.0	17.0	5.00	13.3	74 000	87 000
	5	2	2.5	—	—	—	—	0.1	171	51.0	17.0	5.00	13.3	74 000	87 000
	6	2.3	3	7.5	7.5	0.6	0.8	0.15	279	89.0	28.0	9.00	12.8	67 000	79 000
	6	2.5	—	7.2	—	0.6	—	0.15	279	89.0	28.0	9.00	12.8	67 000	79 000
	7	2.5	—	—	—	—	—	0.15	390	120	40.0	12.0	11.9	59 000	70 000
	7	2.8	3.5	8.5	8.5	0.7	0.9	0.15	380	125	39.0	13.0	12.4	62 000	73 000
2.5	5	1.5	2.3	—	—	—	—	0.08	153	59.0	16.0	6.00	15.0	70 000	82 000
	6	1.8	2.6	7.1	7.1	0.5	0.8	0.08	209	73.0	21.0	7.50	14.2	65 000	76 000
	7	3	3	—	8.2	—	0.6	0.15	284	96.0	29.0	10.0	13.8	59 000	70 000
	7	2.5	3.5	8.5	8.5	0.7	0.9	0.15	284	96.0	29.0	10.0	13.8	59 000	70 000
	8	2.5	2.8	9.2	—	0.6	—	0.15	430	152	44.0	16.0	13.2	56 000	66 000
	8	2.8	4	9.5	9.5	0.7	0.9	0.15	550	174	56.0	18.0	11.5	56 000	66 000
3	6	2	2.5	7.2	7.2	0.6	0.6	0.08	242	94.0	25.0	9.50	14.7	60 000	71 000
	7	2	3	8.1	8.1	0.5	0.8	0.1	390	130	40.0	13.0	13.0	58 000	68 000
	8	2.5	—	9.2	—	0.6	—	0.15	560	180	57.0	18.0	11.9	54 000	63 000
	8	3	4	9.5	9.5	0.7	0.9	0.15	560	180	57.0	18.0	11.9	54 000	63 000
	9	2.5	4	10.2	10.6	0.6	0.8	0.15	635	219	65.0	22.0	12.4	50 000	59 000
	9	3	5	10.5	10.5	0.7	1	0.15	635	219	65.0	22.0	12.4	50 000	59 000
	10	4	4	11.5	11.5	1	1	0.15	640	224	65.0	23.0	12.7	50 000	58 000
4	7	2	2.5	8.2	8.2	0.6	0.6	0.08	222	88.0	23.0	9.00	15.3	54 000	63 000
	8	2	3	9.2	9.2	0.6	0.6	0.08	395	140	40.0	14.0	13.9	52 000	61 000
	9	2.5	4	10.3	10.3	0.6	1	0.15	640	224	65.0	23.0	12.7	49 000	57 000
	10	3	4	11.2	11.6	0.6	0.8	0.15	650	235	66.0	24.0	13.3	46 000	55 000
	11	4	4	12.5	12.5	1	1	0.15	715	276	73.0	28.0	13.7	45 000	52 000
	12	4	4	13.5	13.5	1	1	0.2	970	360	99.0	36.0	12.8	43 000	51 000
	13	5	5	15	15	1	1	0.2	1 310	490	134	50.0	12.4	42 000	49 000
	16	5	5	—	—	—	—	0.3	1 760	680	179	69.0	12.4	37 000	44 000
5	8	2	2.5	9.2	9.2	0.6	0.6	0.08	217	91.0	22.0	9.50	15.8	49 000	57 000
	9	2.5	3	10.2	10.2	0.6	0.6	0.15	500	211	51.0	21.0	14.6	46 000	55 000
	10	3	4	11.2	11.6	0.6	0.8	0.15	715	276	73.0	28.0	13.7	45 000	52 000

1) Smallest allowable dimension for chamfer dimension *r*.

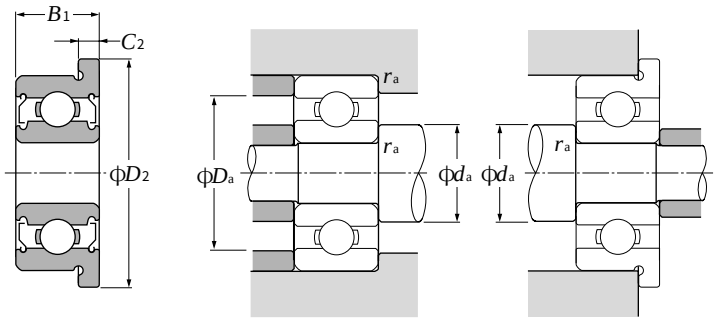

With flanged outer ring and double shield (FL···ZZ)

Dynamic equivalent radial load

$P_r = XF_r + YF_a$

$\frac{f_o \cdot F_a}{C_{or}}$	e	$\frac{F_a}{F_r} \leqq e$		$\frac{F_a}{F_r} > e$	
		X	Y	X	Y
0.172	0.19				2.30
0.345	0.22				1.99
0.689	0.26				1.71
1.03	0.28				1.55
1.38	0.30	1	0	0.56	1.45
2.07	0.34				1.31
3.45	0.38				1.15
5.17	0.42				1.04
6.89	0.44				1.00

Static equivalent radial load

$P_{or} = 0.6F_r + 0.5F_a$

When $P_{or} < F_r$ use $P_{or} = F_r$

Bearing numbers						Abutment and fillet dimensions mm				Mass (approx.) g	
open	with single shield	with double shield	unsealed type with flange	with flanged OR and single shield	with flanged OR and double shield	d_a min	d_a max[2]	D_a max	r_{as} max	open	unsealed type with flange
68/1.5	**W68/1.5SA**	**SSA**	**FL68/1.5**	**FLW68/1.5SA**	**SSA**	2.3	2.4	3.2	0.05	0.07	0.09
69/1.5A	**W69/1.5ASA**	**SSA**	**FL69/1.5A**	**FLW69/1.5ASA**	**SSA**	2.7	2.9	3.8	0.15	0.18	0.24
60/1.5	**W60/1.5ZA**	**ZZA**	**FL60/1.5**	**FLW60/1.5ZA**	**ZZA**	2.7	3.0	4.8	0.15	0.35	0.42
672	—	—	—	—	—	2.5	2.6	3.5	0.05	0.06	—
682	**W682SA**	**SSA**	**FL682**	**FLW682SA**	**SSA**	2.8	2.9	4.2	0.08	0.13	0.17
BC2-5	**WBC2-5SA**	**SSA**	—	—	—	2.8	2.9	4.2	0.10	0.16	—
692	**W692SA**	**SSA**	**FL692**	**FLW692SA**	**SSA**	3.2	3.3	4.8	0.15	0.31	0.38
BC2-6	—	—	**FLBC2-6**	—	—	3.2	3.3	4.8	0.15	0.32	0.38
BC2-7A	—	—	—	—	—	3.2	3.6	5.8	0.15	0.44	—
602	**W602ZA**	**ZZA**	**FL602**	**FLW602ZA**	**ZZA**	3.2	3.7	5.8	0.15	0.54	0.64
67/2.5	**W67/2.5ZA**	**ZZA**	—	—	—	3.1	3.3	4.4	0.08	0.11	—
68/2.5	**W68/2.5ZA**	**ZZA**	**FL68/2.5**	**FLW68/2.5ZA**	**ZZA**	3.1	3.6	4.8	0.08	0.22	0.26
—	**WBC2.5-7ZA**	**ZZA**	—	**FLWBC2.5-7ZA**	**ZZA**	3.7	4.0	5.8	0.15	0.6[3]	0.67[3]
69/2.5	**W69/2.5SA**	**SSA**	**FL69/2.5**	**FLW69/2.5SA**	**SSA**	3.7	4.0	5.8	0.15	0.43	0.53
BC2.5-8	**WBC2.5-8ZA**	**ZZA**	**FLBC2.5-8**	—	—	3.7	4.3	6.8	0.15	0.57	0.65
60/2.5	**W60/2.5ZA**	**ZZA**	**FL60/2.5**	**FLW60/2.5ZA**	**ZZA**	3.7	4.1	6.8	0.15	0.72	0.83
673	**WA673SA**	**SSA**	**FL673**	**FLWA673SA**	**SSA**	3.6	4.1	5.4	0.08	0.2	0.26
683	**W683ZA**	**ZZA**	**FL683**	**FLW683ZA**	**ZZA**	3.9	4.1	5.8	0.1	0.33	0.38
BC3-8	—	—	**FLBC3-8**	—	—	4.2	4.4	6.8	0.15	0.52	0.6
693	**W693Z**	**ZZ**	**FL693**	**FLW693Z**	**ZZ**	4.2	4.4	6.8	0.15	0.61	0.72
BC3-9	**WBC3-9ZA**	**ZZA**	**FLBC3-9**	**FLAWBC3-9ZA**	**ZZA**	4.2	5.0	7.8	0.15	0.71	0.79
603	**W603Z**	**ZZ**	**FL603**	**FLW603Z**	**ZZ**	4.2	5.0	7.8	0.15	0.92	1
623	**623Z**	**ZZ**	**FL623**	**FL623Z**	**ZZ**	4.2	5.2	8.8	0.15	1.6	1.8
674A	**WA674ASA**	**SSA**	**FL674A**	**FLWA674ASA**	**SSA**	4.6	5.0	6.4	0.08	0.28	0.35
BC4-8	**WBC4-8Z**	**ZZ**	**FLBC4-8**	**FLWBC4-8Z**	**ZZ**	4.8	5.0	6.8	0.08	0.38	0.46
684AX50	**W684AX50Z**	**ZZ**	**FL684AX50**	**FLW684AX50Z**	**ZZ**	5.0	5.2	7.8	0.1	0.67	0.76
BC4-10	**WBC4-10Z**	**ZZ**	**FLBC4-10**	**FLAWBC4-10Z**	**ZZ**	5.2	6.0	8.8	0.15	1	1.1
694	**694Z**	**ZZ**	**FL694**	**FL694Z**	**ZZ**	5.2	6.4	9.8	0.15	1.8	2
604	**604Z**	**ZZ**	**FL604**	**FL604Z**	**ZZ**	5.6	6.6	10.4	0.2	2.1	2.3
624	**624Z**	**ZZ**	**FL624**	**FL624Z**	**ZZ**	5.6	6.2	11.4	0.2	3.2	3.5
634	**634Z**	**ZZ**	—	—	—	6	7.6	14	0.3	5.1	—
675	**WA675Z**	**ZZ**	**FL675**	**FLWA675Z**	**ZZ**	5.6	6.0	7.4	0.08	0.32	0.4
BC5-9	**WBC5-9Z**	**ZZ**	**FLBC5-9**	**FLWBC5-9Z**	**ZZ**	5.2	6.1	7.8	0.15	0.55	0.63
BC5-10	**WBC5-10Z**	**ZZ**	**FLBC5-10**	**FLAWBC5-10Z**	**ZZ**	6.2	6.4	8.8	0.15	0.88	0.97

2) This dimension applies to sealed and shielded bearings. 3) Values for double shielded bearings shown.

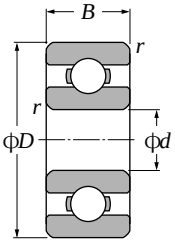

Open type

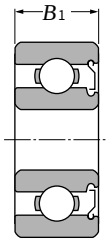

With single shield (Z)

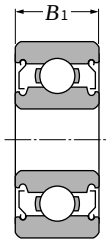

With double shield (ZZ)

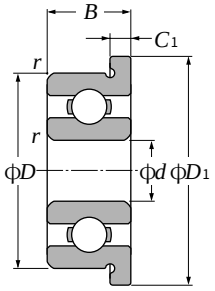

Open type with flange (FL)

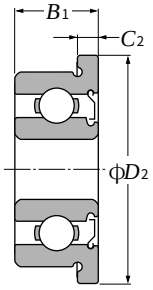

With flanged outer ring and single shield (FL···Z)

d 5 ～ 9mm

Boundary dimensions									Basic load ratings				Factor	Limiting speeds	
									dynamic	static	dynamic	static			
				mm					N		kgf			min^{-1}	
d	D	B	B_1	D_1	D_2	C_1	C_2	$r_{s\,min}$ 1)	C_r	C_{or}	C_r	C_{or}	f_o	grease	oil
5	11	4	4	—	12.6	—	0.8	0.15	715	282	73.0	29.0	14.0	43 000	51 000
	11	3	5	12.5	12.5	0.8	1	0.15	715	282	73.0	29.0	14.0	43 000	51 000
	13	4	4	15	15.2	1	1	0.2	1 080	430	110	44.0	13.4	40 000	47 000
	13	5	5	—	15	—	1	0.2	1 080	430	110	44.0	13.4	40 000	47 000
	14	5	5	16	16	1	1	0.2	1 330	505	135	52.0	12.8	39 000	46 000
	16	5	5	18	18	1	1	0.3	1 760	680	179	69.0	12.4	37 000	44 000
	19	6	6	—	—	—	—	0.3	2 340	885	238	90.0	12.1	34 000	40 000
6	10	2.5	3	11.2	11.2	0.6	0.6	0.1	465	196	47.0	20.0	15.2	43 000	51 000
	12	3	4	13.2	13.6	0.6	0.8	0.15	830	365	85.0	37.0	14.5	40 000	47 000
	13	3.5	5	15	15	1.0	1.1	0.15	1 080	440	110	45.0	13.7	39 000	46 000
	15	5	5	17	17	1.2	1.2	0.2	1 350	530	137	54.0	13.3	37 000	44 000
	16	6	6	—	—	—	—	0.2	1 770	695	181	71.0	12.7	36 000	42 000
	17	6	6	19	19	1.2	1.2	0.3	2 190	865	224	88.0	12.3	35 000	42 000
	19	6	6	22	22	1.5	1.5	0.3	2 340	885	238	90.0	12.1	34 000	40 000
7	11	2.5	3	12.2	12.2	0.6	0.6	0.1	555	269	56.0	27.0	15.6	40 000	47 000
	13	3	4	14.2	14.6	0.6	0.8	0.15	825	375	84.0	38.0	14.9	38 000	45 000
	14	3.5	5	16	16	1	1.1	0.15	1 170	505	120	51.0	14.0	37 000	44 000
	17	5	5	19	19	1.2	1.2	0.3	1 610	715	164	73.0	14.0	35 000	41 000
	19	6	6	—	—	—	—	0.3	2 240	910	228	93.0	12.9	34 000	40 000
	22	7	7	—	—	—	—	0.3	3 350	1 400	340	142	12.5	32 000	37 000
8	12	2.5	3.5	13.2	13.6	0.6	0.8	0.1	515	252	52.0	26.0	15.9	38 000	45 000
	14	3.5	4	15.6	15.6	0.8	0.8	0.15	820	385	84.0	39.0	15.2	36 000	43 000
	16	4	5	18	18	1	1.1	0.2	1 610	715	164	73.0	14.0	35 000	41 000
	19	6	6	22	22	1.5	1.5	0.3	1 990	865	202	88.0	13.8	33 000	39 000
	22	7	7	25	25	1.5	1.5	0.3	3 350	1 400	340	142	12.5	32 000	37 000
	24	8	8	—	—	—	—	0.3	4 000	1 590	410	162	11.7	31 000	36 000
9	14	3	4.5	—	—	—	—	0.1	920	465	94.0	48.0	15.5	36 000	42 000
	17	4	5	19	19	1	1.1	0.2	1 720	820	176	83.0	14.4	33 000	39 000
	20	6	6	—	—	—	—	0.3	2 480	1 090	253	111	13.5	32 000	38 000
	24	7	7	—	—	—	—	0.3	3 400	1 450	345	148	12.9	31 000	36 000
	26	8	8	—	—	—	—	0.6	4 550	1 960	465	200	12.4	30 000	35 000

1) Smallest allowable dimension for chamfer dimension r.

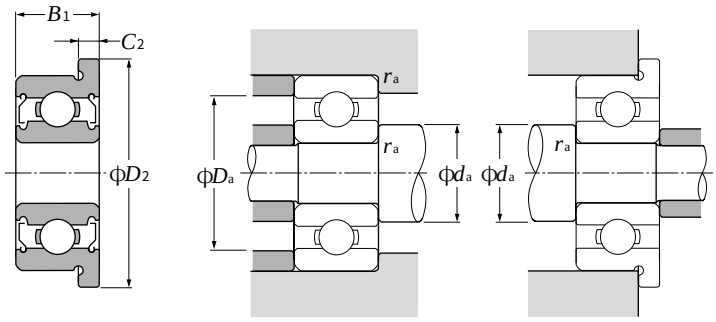

With flanged outer ring and double shield (FL···ZZ)

Dynamic equivalent radial load

$P_r = XF_r + YF_a$

$\frac{f_o \cdot F_a}{C_{or}}$	e	$\frac{F_a}{F_r} \leqq e$		$\frac{F_a}{F_r} > e$	
		X	Y	X	Y
0.172	0.19	1	0	0.56	2.30
0.345	0.22				1.99
0.689	0.26				1.71
1.03	0.28				1.55
1.38	0.30				1.45
2.07	0.34				1.31
3.45	0.38				1.15
5.17	0.42				1.04
6.89	0.44				1.00

Static equivalent radial load

$P_{or} = 0.6F_r + 0.5F_a$

When $P_{or} < F_r$ use $P_{or} = F_r$

Bearing numbers						Abutment and fillet dimensions mm				Mass (approx.) g	
open	with single shield	with double shield	unsealed type with flange	with flanged OR and single shield	with flanged OR and double shield	d_a min	d_a max[2]	D_a max	r_{as} max	open	unsealed type with flange
—	WBC5-11Z	ZZ	—	FLWBC5-11Z	ZZ	6.2	6.8	9.8	0.2	1.8	2
685	W685Z	ZZ	FL685	FLW685Z	ZZ	6.2	6.8	9.8	0.15	1.1	1.3
695	695Z	ZZ	FL695	FL695Z	ZZ	6.6	6.9	11.4	0.2	2.4	2.7
—	WBC5-13Z	ZZ	—	FLWBC5-13Z	ZZ	6.6	6.9	11.4	0.2	3.4[3]	3.7[3]
605	605Z	ZZ	FL605	FL605Z	ZZ	6.6	7.4	12.4	0.2	3.5	3.9
625	625Z	ZZ	FL625	FL625Z	ZZ	7	7.6	14	0.3	4.8	5.2
635	635Z	ZZ	—	—	—	7	9.5	17	0.3	8	—
676A	WA676AZ	ZZ	FL676A	FLWA676AZ	ZZ	6.6	6.7	9.2	0.1	0.65	0.74
BC6-12	WBC6-12Z	ZZ	FLBC6-12	FLAWBC6-12Z	ZZ	7.2	7.9	10.8	0.15	1.3	1.4
686	W686Z	ZZ	FL686	FLW686Z	ZZ	7.0	7.2	11.8	0.15	1.9	2.2
696	696Z	ZZ	FL696	FL696Z	ZZ	7.6	7.8	13.4	0.2	3.8	4.3
BC6-16A	BC6-16AZ	ZZ	—	—	—	7.6	8.0	14.4	0.2	5.2	—
606	606Z	ZZ	FL606	FL606Z	ZZ	8	8.6	15	0.3	6	6.5
626	626Z	ZZ	FL626	FL626Z	ZZ	8	9.5	17	0.3	8.1	9.2
677	WA677Z	ZZ	FL677	FLWA677Z	ZZ	7.8	8.1	10.2	0.1	0.67	0.77
BC7-13	WBC7-13Z	ZZ	FLBC7-13	FLAWBC7-13Z	ZZ	8.2	8.9	11.8	0.15	1.4	1.5
687A	W687AZ	ZZ	FL687A	FLW687AZ	ZZ	8.2	8.7	12.8	0.15	2.1	2.4
697	697Z	ZZ	FL697	FL697Z	ZZ	9	10.0	15	0.3	5.2	5.7
607	607Z	ZZ	—	—	—	9	10.4	17	0.3	8	—
627	627Z	ZZ	—	—	—	9	12.2	20	0.3	13	—
678A	W678AZ	ZZ	FL678A	FLAW678AZ	ZZ	8.8	9.1	11.2	0.1	0.75	0.86
BC8-14	WBC8-14Z	ZZ	FLBC8-14	FLWBC8-14Z	ZZ	9.2	9.5	12.8	0.15	1.8	1.9
688A	W688AZ	ZZ	FL688A	FLW688AZ	ZZ	9.6	10.0	14.4	0.2	3.1	3.5
698	698Z	ZZ	FL698	FL698Z	ZZ	10	10.6	17	0.3	7.3	8.4
608	608Z	ZZ	FL608	FL608Z	ZZ	10	12.2	20	0.3	12	13
628	628Z	ZZ	—	—	—	10	12.1	22	0.3	17	—
679	W679Z	ZZ	—	—	—	9.8	10.4	13.2	0.1	1.4	—
689	W689Z	ZZ	FL689	FLW689Z	ZZ	10.6	10.7	15.4	0.2	3.2	3.6
699	699Z	ZZ	—	—	—	11	11.6	18	0.3	8.2	—
609	609Z	ZZ	—	—	—	11	13.1	22	0.3	14	—
629X50	629X50Z	ZZ	—	—	—	13	13.9	22	0.3	20	—

2) This dimension applies to sealed and shielded bearings. 3) Values for double shielded bearings shown.

Inch series

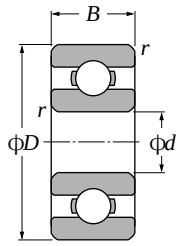

Open type

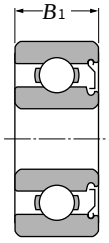

With single shield (Z)

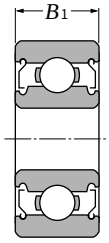

With double shield (ZZ)

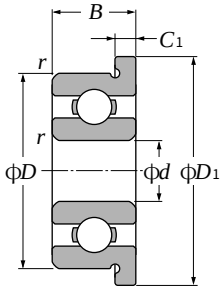

Open type with flange (FL)

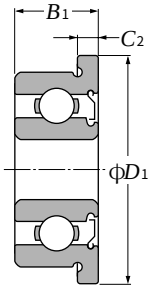

With flanged outer ring and single shield (FL···Z)

d 1.984 ～

Boundary dimensions								Basic load ratings				Factor	Limiting speeds	
								dynamic	static	dynamic	static			
mm								N		kgf			min^{-1}	
d	*D*	*B*	B_1	D_1	C_1	C_2	$r_{s\,min}$ [1]	C_r	C_{or}	C_r	C_{or}	f_o	grease	oil
1.984	6.35	2.38	3.571	7.52	0.58	0.79	0.08	279	89.0	28	9	12.8	67 000	79 000
2.380	4.762	1.588	2.38	5.94	0.46	0.79	0.08	124	42.0	13	4.5	14.8	73 000	85 000
	7.938	2.779	3.571	9.12	0.58	0.79	0.13	430	152	44	16	13.2	56 000	66 000
3.175	6.35	2.38	2.779	7.52	0.58	0.79	0.08	284	96.0	29	10	13.7	59 000	70 000
	7.938	2.779	3.571	9.12	0.58	0.79	0.08	560	180	57	18	11.9	54 000	63 000
	9.525	2.779	3.571	10.72	0.53	0.79	0.13	640	224	65	23	12.7	49 000	58 000
	9.525	3.967	3.967	11.18	0.76	0.76	0.3	640	224	65	23	12.7	49 000	58 000
	12.7	4.366	4.366	—	—	—	0.3	1 150	395	117	40	11.7	43 000	51 000
3.967	7.938	2.779	3.175	9.12	0.58	0.91	0.08	335	133	34	14	14.8	51 000	60 000
4.762	7.938	2.779	3.175	9.12	0.58	0.91	0.08	395	143	40	15	14.2	49 000	58 000
	9.525	3.175	3.175	10.72	0.58	0.79	0.08	710	268	72	27	13.3	46 000	55 000
	12.7	3.967	—	—	—	—	0.3	1 310	490	134	50	12.4	41 000	48 000
	12.7	4.978	4.978	14.35	1.07	1.07	0.3	1 310	490	134	50	12.4	41 000	48 000
6.350	9.525	3.175	3.175	10.72	0.58	0.91	0.08	210	94.0	21	9.5	16.4	43 000	51 000
	12.7	3.175	4.762	13.89	0.58	1.14	0.13	830	370	84	38	14.7	39 000	46 000
	15.875	4.978	4.978	17.53	1.07	1.07	0.3	1 480	615	151	63	13.6	36 000	43 000
	19.05	—	7.142	—	—	—	0.41	2 340	885	238	90	12.1	34 000	40 000
9.525	22.225	—	7.142	24.61	—	1.57	0.41	3 300	1 400	340	142	12.7	31 000	37 000

1) Smallest allowable dimension for chamfer dimension *r*.

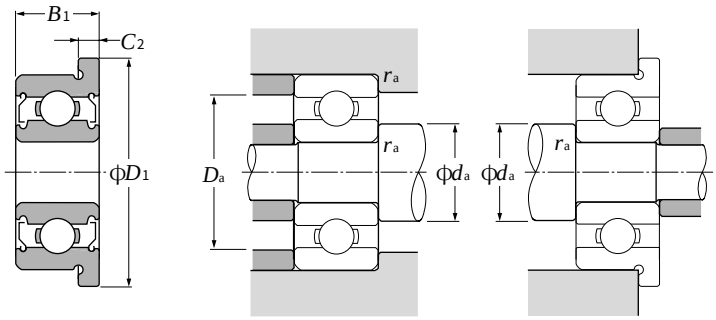

With flanged outer ring and double shield (FL···ZZ)

Dynamic equivalent radial load

$P_r = XF_r + YF_a$

$\frac{f_o \cdot F_a}{C_{or}}$	e	$\frac{F_a}{F_r} \leqq e$		$\frac{F_a}{F_r} > e$	
		X	Y	X	Y
0.172	0.19	1	0	0.56	2.30
0.345	0.22				1.99
0.689	0.26				1.71
1.03	0.28				1.55
1.38	0.30				1.45
2.07	0.34				1.31
3.45	0.38				1.15
5.17	0.42				1.04
6.89	0.44				1.00

Static equivalent radial load

$P_{or} = 0.6F_r + 0.5F_a$

When $P_{or} < F_r$ use $P_{or} = F_r$

Bearing numbers						Abutment and fillet dimensions mm				Mass (approx.) g	
open	with single shield	with double shield	unsealed type with flange	with flanged OR and single shield	with flanged OR and double shield	d_a min	d_a max 2)	D_a max	r_{as} max	open	unsealed type with flange
R1-4	**RA1-4ZA**	**ZZA**	**FLR1-4**	**FLRA1-4ZA**	**ZZA**	2.8	3.3	5.5	0.08	0.35	0.41
R133	**RA133ZA**	**ZZA**	**FLR133**	**FLRA133ZA**	**ZZA**	2.9	3.1	4	0.08	0.12	0.16
R1-5	**RA1-5ZA**	**ZZA**	**FLR1-5**	**FLRA1-5ZA**	**ZZA**	3.2	4.3	7.1	0.1	0.69	0.76
R144	**RA144ZA**	**ZZA**	**FLR144**	**FLRA144ZA**	**ZZA**	3.9	4.0	5.5	0.08	0.27	0.33
R2-5	**RA2-5Z**	**ZZ**	**FLR2-5**	**FLRA2-5Z**	**ZZ**	4	4.4	7	0.08	0.61	0.68
R2-6	**RA2-6ZA**	**ZZA**	**FLR2-6**	**FLRA2-6ZA**	**ZZA**	4	5.2	8.7	0.1	0.88	0.96
R2	**RA2ZA**	**ZZA**	**FLR2**	**FLRA2ZA**	**ZZA**	4.8	5.2	7.8	0.3	1.3	1.5
RA2	**RA2Z**	**ZZ**	—	—	—	4.8	5.4	11	0.3	2.5	—
R155	**RA155ZA**	**ZZA**	**FLR155**	**FLRA155ZA**	**ZZA**	4.8	5.3	7	0.08	0.54	0.61
R156	**RA156Z**	**ZZ**	**FLR156**	**FLRA156Z**	**ZZ**	5.5	5.6	7	0.08	0.44	0.51
R166	**R166Z**	**ZZ**	**FLR166**	**FLRA166Z**	**ZZ**	5.6	5.9	8.7	0.08	0.8	0.89
R3	—	—	—	—	—	6.4	7.2	11	0.3	2.2	—
RA3	**RA3Z**	**ZZ**	**FLRA3**	**FLRA3Z**	**ZZ**	6.0	6.4	11	0.3	2.4	2.7
R168A	**R168AZ**	**AZZ**	—	**FLRA168AZ**	**ZZ**	7.1	7.3	8.7	0.08	0.6	0.69
R188	**RA188ZA**	**ZZA**	**FLR188**	**FLRA188ZA**	**ZZA**	7.2	8.2	11.8	0.1	1.6	1.7
R4	**R4Z**	**ZZ**	**FLR4**	**FLR4Z**	**ZZ**	8	8.6	14.2	0.3	4.4	4.8
—	**RA4Z**	**ZZ**	—	—	—	8.4	9.5	17	0.4	11 2)	—
—	**R6Z**	**ZZ**	—	**FLR6Z**	**ZZ**	11.5	11.9	20.2	0.4	14 3)	15 3)

2) This dimension applies to sealed and shielded bearings. 3) Values for double shielded bearings shown.

With Snap Ring Grooves, Snap Rings

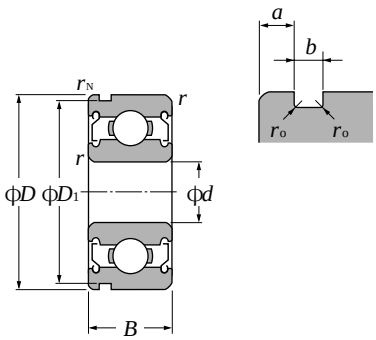

Snap ring groove Shielded type (ZZ)

Snap ring Shielded type (ZZ)

d 5 ～ 12mm

Boundary dimensions mm					Basic load ratings dynamic N		static N		Limiting speeds dynamic kgf		static kgf	Bearing numbers	
d	*D*	*B*	$r_{s\,min}$ 1)	r_{Na} min	C_r	C_{or}	C_r	C_{or}	f_o	grease	oil	with snap ring groove shielded type	with snap ring shielded type
5	13	4	0.2	0.1	1 080	430	110	44	13.4	40 000	47 000	**SC559ZZN**	**ZZNR**
	14	5	0.2	0.2	1 330	505	135	52	12.8	39 000	46 000	**SC571ZZN**	**ZZNR**
6	12	4	0.15	0.1	640	365	65	37	14.5	40 000	47 000	∗**F-SC6A06ZZ1N**	**ZZ1NR**
	13	5	0.15	0.1	1 080	440	110	45	13.7	39 000	46 000	**SC6A04ZZN**	**ZZNR**
	15	5	0.2	0.2	1 350	530	137	54	13.3	37 000	44 000	**SC6A17ZZN**	**ZZNR**
	19	6	0.3	0.3	2 340	885	238	90	12.1	34 000	40 000	**SC669ZZN**	**ZZNR**
8	16	5	0.2	0.1	1 260	585	128	60	14.6	35 000	41 000	**SC890ZZN**	**ZZNR**
	22	7	0.3	0.4	3 350	1 400	340	142	12.5	32 000	37 000	**SC850ZZN**	**ZZNR**
10	26	8	0.3	0.3	4 550	1 960	465	200	12.4	29 000	34 000	**SC0039ZZN**	**ZZNR**
12	28	8	0.3	0.3	5 100	2 390	520	204	13.2	26 000	30 000	**SC0142ZZN**	**ZZNR**

1) Smallest allowable dimension for chamfer dimension *r*.
Note: " ∗ " mark indicates stainless steel is used.

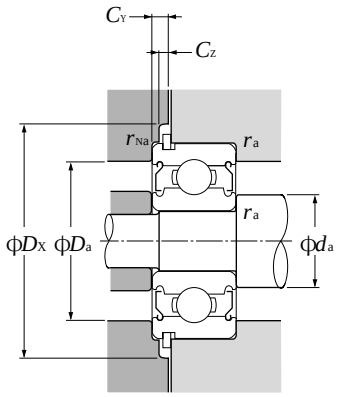

Dynamic equivalent radial load

$P_r = XF_r + YF_a$

$\frac{f_o \cdot F_a}{C_{or}}$	e	$\frac{F_a}{F_r} \leqq e$		$\frac{F_a}{F_r} > e$	
		X	Y	X	Y
0.172	0.19	1	0	0.56	2.30
0.345	0.22				1.99
0.689	0.26				1.71
1.03	0.28				1.55
1.38	0.30				1.45
2.07	0.34				1.31
3.45	0.38				1.15
5.17	0.42				1.04
6.89	0.44				1.00

Static equivalent radial load

$P_{or} = 0.6F_r + 0.5F_a$

When $P_{or} < F_r$ use $P_{or} = F_r$

Snap ring groove dimensions mm				Snap ring dimensions mm				Abutment and fillet dimensions mm						Mass kg
D_1 max	a max	b min	r_o max	D_2 max	f max	d_a min	d_a max	D_a max	D_X (approx.)	C_Y max	C_Z min	r_{as} max	r_{Nas} max	with snap ring (approx.)
12.15	0.88	0.55	0.2	15.2	0.55	6.6	6.9	11.4	15.9	1.2	0.6	0.2	0.1	0.002
13.03	1.28	0.65	0.06	16.13	0.54	6.6	7.4	12.4	16.9	1.6	0.6	0.2	0.2	0.004
11.15	0.78	0.60	0.02	14.2	0.55	7.2	7.9	10.8	14.9	1.1	0.6	0.15	0.1	0.001
12.15	1.08	0.55	0.2	15.2	0.55	7.0	7.2	11.8	15.9	1.4	0.6	0.15	0.1	0.002
14.03	1.03	0.65	0.06	17.2	0.60	7.6	7.8	13.4	17.9	1.4	0.7	0.2	0.2	0.004
17.9	0.93	0.80	0.2	22.0	0.70	8.0	9.5	17.0	22.8	1.4	0.7	0.3	0.3	0.008
14.95	0.53	0.65	0.05	18.2	0.54	9.6	10.0	14.4	18.9	0.9	0.6	0.2	0.1	0.003
20.8	2.35	0.80	0.2	24.8	0.70	10.0	12.7	20	25.5	2.8	0.7	0.3	0.4	0.013
24.5	2.20	0.90	0.3	28.8	0.85	12	13.5	24	29.5	2.8	0.9	0.3	0.3	0.02
26.44	2.20	0.90	0.3	32.7	0.85	14	16	26	33.4	2.8	0.9	0.3	0.3	0.022

JAPAN P4
JAPAN R4

Angular contact ball bearing

High speed use angular contact ball bearing

Ultra high speed use angular contact ball bearing

Four-point contact ball bearing

Double row angular contact ball bearing

1. Design features and special characteristics

1.1 Angular contact ball bearing

Angular contact ball bearings are non-separable bearings which have a certain contact angle in the radial direction relative to the straight line that runs through the point where each ball makes contact with the inner and outer rings (see **Diagram 1**). **Table 1** gives contact angle and contact angle symbol.

In addition to radial loads, single direction axial loads can also be accommodated by angular contact ball bearings.

Furthermore, since an axial load is generated from a radial force, these bearings are generally used in pairs facing each other. Standard type, high speed use type and ultra high speed varieties of angular contact ball bearings are available through NTN, and there are also many duplex varieties. A bearing accuracy of JIS Class 5 or higher is applied to duplex type angular contact ball bearings, and in many cases they are given a preload, in compliance with standard preload levels, before being used in an application. **Table 2** shows information concerning angular contact ball bearings, and **Table 3** shows similar information for duplex angular contact ball bearings.

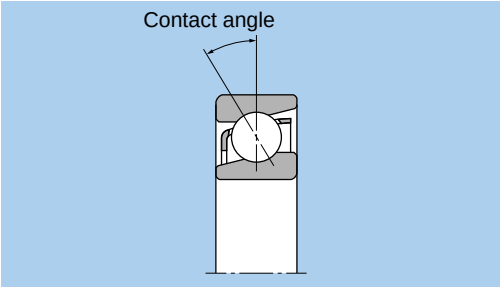

Diagram 1.

Table 1 Contact angle and contact angle codes

Contact angle	15°	30°	40°
Code	C	A❶	B

❶ Contact angle symbol A is omitted.

Table 2 Angular contact ball bearing types and characteristics

Type	Design	Characteristics
Standard type		● Available in bearing series 79, 70, 72, 72B, 73, and 73B. ● Contact angles: 30°and 40° (with B) available. ● Standard bearing cage type differs depending on bearing no. (Refer to **Table 4**)
High speed use	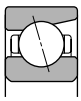	● Available in bearing series 78C, 79C, 70C, 72C, and 73C. ● Contact angles: 15° ● All bearing accuracies JIS Class 5 or higher. ● Standard bearing cage type differs depending on bearing no. (Refer to **Table 4**)
Ultra high speed use	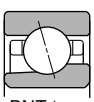 BNT type HSB type	● Available in bearing series HSB9C, HSB0C, BNT0, and BNT2; all boundary dimensions agree with JIS series dimensions. ● Contact angles: 15°; HSB type HSB9 and HSB0: 15°and 30°. ● All bearing accuracies JIS Class 5 or higher. ● BNT type internal design can be altered; suitable for higher speed applications than high speed use bearings. ● HSB series bearings have smaller diameter of balls than high speed use type bearings, so benefit by less torque for high precision, high speed applications. ● The inner ring bore diameter and outer ring inner diameter of the HSB series have a ground undercut on one side enabling easy oil flow. ● For even higher speed applications, there is a bearing in this series equipped with ceramic ball bearings. ● For standard cage types refer to **Table 4**; molded resin cages are also available for some varieties.

Table 3 Duplex angular contact ball bearings — types and characteristics

Duplex type		Characteristics
Back-to-back duplex (DB)	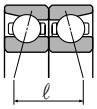	● Can accommodate radial loads and axial loads in either direction. ● Has a large distance ℓ between the acting load center of the bearing, and therefore a large momentary force load capacity. ● Allowable misalignment angle is small.
Face-to face duplex (DF)	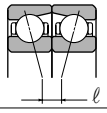	● Can accommodate radial loads and axial loads in either direction. ● Has a smaller distance ℓ between the acting load center of the bearing, and therefore a smaller momentary force load capacity. ● Has a larger allowable misalignment angle than back-to-back duplex type.
Tandem duplex (DT)		● Can accommodate radial loads and single direction axial loads. ● Axial loads are received by both bearings as a set, and therefore heavy axial loads can be accommodated.

Note: 1. Duplex bearings are manufactured in a set to specified clearance and preload values, therefore they must be assembled together with identically numbered bearings and not mixed with other arrangements.
2. Triplex arrangements of angular contact bearings are also available. Consult NTN Engineering for details.

1.2 Four-point angular contact ball bearings

Four-point angular contact ball bearings have a contact angle of 30˚ and inner rings which are separated in half. As shown in **Diagram 2**, when the inner and outer rings receive a radial load the ball bearings contact the inner and outer rings at four points. This construction enables a single bearing to accommodate axial loads from either direction, and when generally under a simple axial load or heavy axial load, the bearing functions in reliance on two contact points like ordinary bearings.

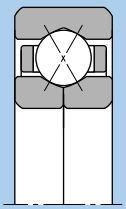

Diagram 2.

1.3 Double row angular contact ball bearings

The structure of double row angular contact ball bearings is designed by arranging two single row angular contact bearings back-to-back in duplex (DB) to form one united bearing with a contact angle of 25˚.

These bearings are capable of accommodating radial loads, axial loads in either direction, and have a high capacity for momentary loads as well.

As shown in **Diagram 3**, sealed and shielded type double row angular contact ball bearings are also available. Standard loads vary from those of open type bearings.

■Flush ground

"Flush ground" is the name given to the finishing method shown in **Diagram 4** where the offset of the front and back faces of the bearing are ground to the same value. By doing this, a stated clearance or preload value can be achieved by using bearings with identical codes for these values, in other words by combining either DB or DF series bearings. DT series bearings can also be used in various arrangements to achieve uniform load distribution.

All BNT type bearings are flush ground, but other angular contact ball bearing series are not. If it is necessary to flush grind any of these other bearings, please consult NTN Engineering.

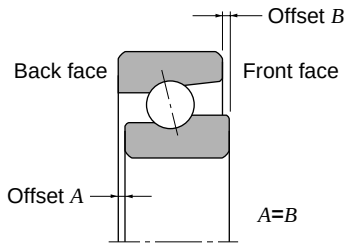

Diagram 4.

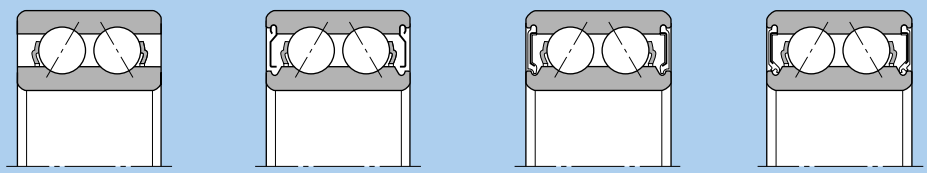

Diagram 3.

2. Standard cage types

Table 4 lists the standard cage types for angular contact ball bearings. For high speed use angular contact ball bearings, molded resin cages and machined cages are widely used.

Table 4 Standard cages for angular contact ball bearings

Type	Bearing series	Molded resin cage	Pressed cage	Machined cage
Standard	79 70 72 73 72B 73B	7904～7913 7000～7024 — — — —	— — 7200 ～7222 7300 ～7322 7200B～7222B 7300B～7322B	7914 ～7960 7026 ～7040 7224 ～7240 7324 ～7340 7224B ～7240B 7324B ～7340B
High speed use	78C 79C 70C 72C 73C	— 7904C～7913C 7000C～7024C 7200C～7220C 7303C～7312C	— — — — —	7805C ～7834C 7914C ～7934C 7026C ～7040C 7221C ～7240C 7300C ～7302C 7313C ～7340C
Ultra high speed use	BNT0 BNT2 HSB9C HSB0C	— — — HSB010C～HSB032C	— — — —	BNT000 ～BNT009 BNT200 ～BNT209 HSB910C ～HSB934C HSB034C
4-point contact	QJ2 QJ3	— —	— —	QJ208 ～QJ224 QJ306 ～QJ324
Double row	52 53	— —	5200S～5217S 5302S～5314S	— —

Note: 1. Standard cages for 5S-BNT and 5S-HSB type bearings are the same as cages for BNT and HSB type bearings.
2. Due to the material characteristics of molded resin cages, use at application temperatures in excess of 120˚C is not possible.

Single and Duplex Angular Contact Ball Bearings

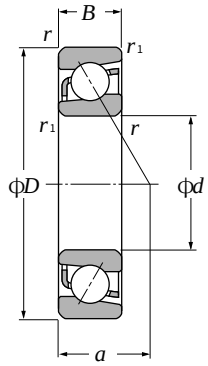

Single

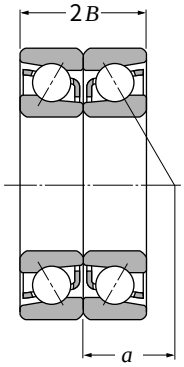

Back-to-back arrangement (DB)

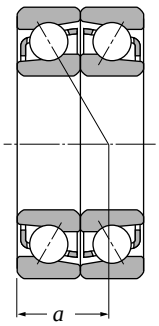

Face-to-face arrangement (DF)

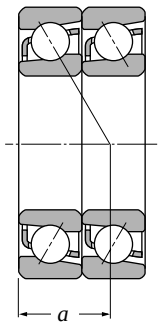

Tandem arrangement (DT)

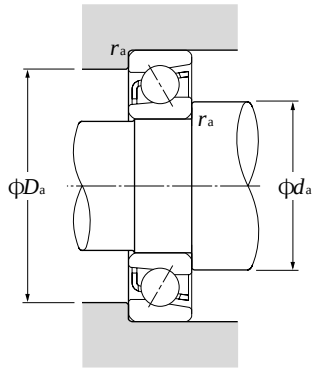

d 10 ～ 30mm

Boundary dimensions mm						Basic load ratings dynamic kN		static kN		Limiting speeds[1] min-1		Bearing[2] numbers	Load centerkg mm	Mass kg single (approx.)
d	D	B	2B	$r_{s\,min}$[3]	$r_{ls\,min}$[3]	C_r	C_{or}	C_r	C_{or}	grease	oil		a	
10	26	8	16	0.3	0.15	4.65	2.07	470	212	29 000	39 000	**7000**	9	0.023
	30	9	18	0.6	0.3	5.45	2.74	555	279	28 000	37 000	**7200**	10.5	0.029
	30	9	18	0.6	0.3	5.00	2.52	510	257	24 000	32 000	**7200B**	13	0.029
	35	11	22	0.6	0.3	10.1	4.95	1 030	500	26 000	34 000	**7300**	12	0.04
	35	11	22	0.6	0.3	9.50	4.60	970	470	22 000	29 000	**7300B**	15	0.041
12	28	8	16	0.3	0.15	5.05	2.46	515	251	26 000	35 000	**7001**	10	0.025
	32	10	20	0.6	0.3	7.60	3.95	775	405	25 000	33 000	**7201**	11.5	0.035
	32	10	20	0.6	0.3	7.00	3.65	775	405	21 000	28 000	**7201B**	14	0.036
	37	12	24	1	0.6	11.2	5.25	1 140	535	23 000	30 000	**7301**	13	0.044
	37	12	24	1	0.6	10.5	4.95	1 080	505	19 000	26 000	**7301B**	16.5	0.045
15	32	9	18	0.3	0.15	5.80	3.15	590	320	23 000	31 000	**7002**	11.5	0.035
	35	11	22	0.6	0.3	9.05	4.70	925	480	22 000	29 000	**7202**	12.5	0.046
	35	11	22	0.6	0.3	8.35	4.35	855	445	18 000	25 000	**7202B**	16	0.046
	42	13	26	1	0.6	13.5	7.20	1 370	735	19 000	26 000	**7302**	15	0.055
	42	13	26	1	0.6	12.5	6.65	1 270	680	17 000	22 000	**7302B**	19	0.057
17	35	10	20	0.3	0.15	7.15	3.85	730	390	21 000	28 000	**7003**	12.5	0.046
	40	12	24	0.6	0.3	12.0	6.60	1 220	675	19 000	26 000	**7203**	14.5	0.064
	40	12	24	0.6	0.3	11.0	6.10	1 120	625	17 000	22 000	**7203B**	18	0.066
	47	14	28	1	0.6	15.9	8.65	1 630	880	18 000	24 000	**7303**	16	0.107
	47	14	28	1	0.6	14.8	8.00	1 510	820	15 000	20 000	**7303B**	20.5	0.109
20	42	12	24	0.6	0.3	9.70	5.60	990	570	19 000	25 000	**7004**	15	0.08
	47	14	28	1	0.6	14.5	8.40	1 480	855	17 000	23 000	**7204**	17	0.1
	47	14	28	1	0.6	13.3	7.70	1 360	785	15 000	20 000	**7204B**	21.5	0.102
	52	15	30	1.1	0.6	18.7	10.4	1 910	1 060	16 000	21 000	**7304**	18	0.138
	52	15	30	1.1	0.6	17.3	9.65	1 770	985	13 000	18 000	**7304B**	22.5	0.141
25	42	9	18	0.3	0.15	7.15	4.95	730	505	17 000	22 000	**7905**	14	0.05
	47	12	24	0.6	0.3	10.7	6.85	1 100	700	16 000	21 000	**7005**	16.5	0.093
	52	15	30	1	0.6	16.2	10.3	1 650	1 050	14 000	19 000	**7205**	19	0.125
	52	15	30	1	0.6	14.8	9.40	1 510	960	12 000	16 000	**7205B**	24	0.129
	62	17	34	1.1	0.6	26.4	15.8	2 690	1 610	13 000	17 000	**7305**	21	0.23
	62	17	34	1.1	0.6	24.4	14.6	2 490	1 490	11 000	15 000	**7305B**	27	0.234
30	47	9	18	0.3	0.15	7.55	5.75	770	585	14 000	19 000	**7906**	15.5	0.058
	55	13	26	1	0.6	13.9	9.45	1 410	965	13 000	18 000	**7006**	19	0.135

1) This value achieved with machined cages; when pressed cages are used, 80% of this value is acceptable.
2) Bearing numbers appended with the code "**B**" have a contact angle of 40°; bearings with this code have a contact angle of 30°.
3) Smallest allowable dimension for chamfer dimension *r*.

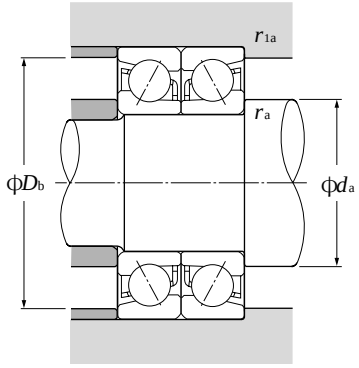

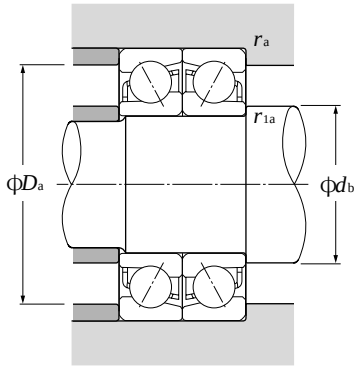

Dynamic equivalent radial load

$P_r = XF_r + YF_a$

Contact angle	e	Single, DT				DB, DF			
		$F_a/F_r \leqq e$		$F_a/F_r > e$		$F_a/F_r \leqq e$		$F_a/F_r > e$	
		X	Y	X	Y	X	Y	X	Y
30°	0.80	1	0	0.39	0.76	1	0.78	0.63	1.24
40°	1.14	1	0	0.35	0.57	1	0.55	0.57	0.93

Static equivalent radial load

$P_{or} = X_o F_r + Y_o F_a$

Contact angle	Single, DT		DB, DF	
	X_o	Y_o	X_o	Y_o
30°	0.5	0.33	1	0.66
40°	0.5	0.26	1	0.52

For single and DT arrangement,
When $P_{or} < F_r$ use $P_{or} = F_r$

Basic load ratings dynamic (duplex) kN C_r	Basic load ratings static (duplex) kN C_{or}	Basic load ratings dynamic (duplex) kgf C_r	Basic load ratings static (duplex) kgf C_{or}	Limiting speeds[1] (duplex) min^{-1} grease	Limiting speeds[1] (duplex) min^{-1} oil	Bearing numbers[2] DB	DF	DT	Abutment and fillet dimensions mm d_a min	d_b min	D_a max	D_b max	r_{as} max	r_{1as} max
7.50	4.15	765	425	23 000	31 000	DB	DF	DT	12.5	12.5	23.5	24.8	0.3	0.15
8.80	5.45	900	560	22 000	30 000	DB	DF	DT	14.5	12.5	25.5	27.5	0.6	0.3
8.10	5.05	825	515	19 000	26 000	DB	DF	DT	14.5	12.5	25.5	27.5	0.6	0.3
16.5	9.85	1 680	1 000	20 000	27 000	DB	DF	DT	14.5	12.5	30.5	32.5	0.6	0.3
15.4	9.20	1 570	940	18 000	24 000	DB	DF	DT	14.5	12.5	30.5	32.5	0.6	0.3
8.20	4.90	840	500	21 000	28 000	DB	DF	DT	14.5	14.5	25.5	26.8	0.3	0.15
12.3	7.95	1 260	810	20 000	26 000	DB	DF	DT	16.5	14.5	27.5	29.5	0.6	0.3
11.4	7.35	1 160	750	17 000	23 000	DB	DF	DT	16.5	14.5	27.5	29.5	0.6	0.3
18.2	10.5	1 850	1 070	18 000	24 000	DB	DF	DT	17.5	16.5	31.5	32.5	1	0.6
17.1	9.90	1 750	1 010	16 000	21 000	DB	DF	DT	17.5	16.5	31.5	32.5	1	0.6
9.40	6.30	960	640	18 000	24 000	DB	DF	DT	17.5	17.5	29.5	30.8	0.3	0.15
14.7	9.40	1 500	960	17 000	23 000	DB	DF	DT	19.5	17.5	30.5	32.5	0.6	0.3
13.6	8.70	1 390	885	15 000	20 000	DB	DF	DT	19.5	17.5	30.5	32.5	0.6	0.3
21.9	14.4	2 230	1 470	15 000	21 000	DB	DF	DT	20.5	19.5	36.5	37.5	1	0.6
20.3	13.3	2 070	1 360	13 000	18 000	DB	DF	DT	20.5	19.5	36.5	37.5	1	0.6
11.6	7.65	1 190	780	17 000	22 000	DB	DF	DT	19.5	19.5	32.5	33.8	0.3	0.15
19.4	13.2	1 980	1 350	15 000	21 000	DB	DF	DT	21.5	19.5	35.5	37.5	0.6	0.3
17.9	12.2	1 830	1 250	13 000	18 000	DB	DF	DT	21.5	19.5	35.5	37.5	0.6	0.3
25.9	17.3	2 640	1 760	14 000	19 000	DB	DF	DT	22.5	21.5	41.5	42.5	1	0.6
24.0	16.0	2 450	1 640	12 000	16 000	DB	DF	DT	22.5	21.5	41.5	42.5	1	0.6
15.8	11.2	1 610	1 140	15 000	20 000	DB	DF	DT	24.5	24.5	37.5	39.5	0.6	0.3
23.6	16.8	2 400	1 710	14 000	18 000	DB	DF	DT	25.5	24.5	41.5	42.5	1	0.6
21.6	15.4	2 200	1 570	12 000	16 000	DB	DF	DT	25.5	24.5	41.5	42.5	1	0.6
30.5	20.8	3 100	2 130	12 000	17 000	DB	DF	DT	27	24.5	45	47.5	1	0.6
28.2	19.3	2 870	1 970	11 000	14 000	DB	DF	DT	27	24.5	45	47.5	1	0.6
11.6	9.95	1 180	1 010	13 000	18 000	DB	DF	DT	27.5	27.5	39.5	40.8	0.3	0.15
17.5	13.7	1 780	1 400	12 000	17 000	DB	DF	DT	29.5	29.5	42.5	44.5	0.6	0.3
26.3	20.6	2 690	2 100	11 000	15 000	DB	DF	DT	30.5	29.5	46.5	47.5	1	0.6
24.0	18.8	2 450	1 920	10 000	13 000	DB	DF	DT	30.5	29.5	46.5	47.5	1	0.6
43.0	31.5	4 400	3 250	10 000	14 000	DB	DF	DT	32	29.5	55	57.5	1	0.6
39.5	29.3	4 050	2 980	9 100	12 000	DB	DF	DT	32	29.5	55	57.5	1	0.6
12.3	11.5	1 250	1 170	12 000	15 000	DB	DF	DT	32.5	32.5	44.5	45.8	0.3	0.15
22.5	18.9	2 300	1 930	11 000	14 000	DB	DF	DT	35.5	35.5	49.5	50.5	1	0.6

Note: For bearing series **79** and **70**, inner rings are constructed with groove abutments on both sides. Therefore, the inner ring chamfer dimension r_1 is identical to dimension r. Furthermore, the radius r_{1a} of the shaft corner roundness is likewise identical to r_a.

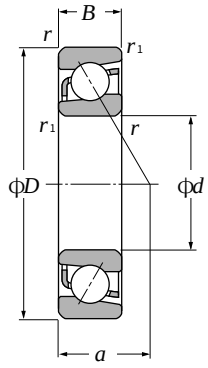

Single

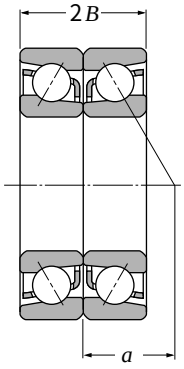

Back-to-back arrangement (DB)

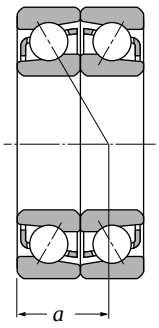

Face-to-face arrangement (DF)

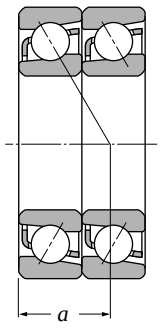

Tandem arrangement (DT)

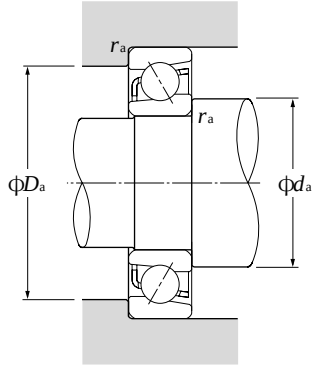

d 30 ～ 55mm

Boundary dimensions mm						Basic load ratings dynamic kN	static kN	dynamic kgf	static kgf	Limiting speeds[1] min-1		Bearing numbers[2]	Load centerkg mm	Mass kg single (approx.)
d	D	B	2B	$r_{s\,min}$[3]	$r_{ls\,min}$[3]	C_r	C_{or}	C_r	C_{or}	grease	oil		a	
30	62	16	32	1	0.6	22.5	14.8	2 300	1 510	12 000	16 000	**7206**	21.5	0.193
	62	16	32	1	0.6	20.5	13.5	2 090	1 380	11 000	14 000	**7206B**	27.5	0.197
	72	19	38	1.1	0.6	33.5	22.3	3 450	2 280	11 000	15 000	**7306**	24.5	0.345
	72	19	38	1.1	0.6	31.0	20.5	3 150	2 090	9 600	13 000	**7306B**	31.5	0.352
35	55	10	20	0.6	0.3	12.0	8.85	1 220	905	13 000	17 000	**7907**	18	0.088
	62	14	28	1	0.6	17.5	12.6	1 790	1 280	12 000	16 000	**7007**	21	0.18
	72	17	34	1.1	0.6	29.7	20.1	3 050	2 050	11 000	14 000	**7207**	24	0.281
	72	17	34	1.1	0.6	27.1	18.4	2 760	1 870	9 300	12 000	**7207B**	31	0.287
	80	21	42	1.5	1	40.0	26.3	4 050	2 680	9 800	13 000	**7307**	27	0.462
	80	21	42	1.5	1	36.5	24.2	3 750	2 470	8 400	11 000	**7307B**	34.5	0.469
40	62	12	24	0.6	0.3	12.7	10.2	1 290	1 040	11 000	15 000	**7908**	20.5	0.13
	68	15	30	1	0.6	18.8	14.6	1 910	1 490	10 000	14 000	**7008**	23	0.222
	80	18	36	1.1	0.6	35.5	25.1	3 600	2 560	9 600	13 000	**7208**	26.5	0.355
	80	18	36	1.1	0.6	32.0	23.0	3 250	2 340	8 300	11 000	**7208B**	34	0.375
	90	23	46	1.5	1	49.0	33.0	5 000	3 350	8 600	12 000	**7308**	30.5	0.625
	90	23	46	1.5	1	45.0	30.5	4 550	3 100	7 400	9 900	**7308B**	39	0.636
45	68	12	24	0.6	0.3	15.7	12.9	1 600	1 310	10 000	14 000	**7909**	22.5	0.15
	75	16	32	1	0.6	22.3	17.7	2 270	1 800	9 500	13 000	**7009**	25.5	0.282
	85	19	38	1.1	0.6	39.5	28.7	4 050	2 930	8 700	12 000	**7209**	28.5	0.404
	85	19	38	1.1	0.6	36.0	26.2	3 650	2 680	7 400	9 900	**7209B**	37	0.41
	100	25	50	1.5	1	63.5	44.0	6 450	4 500	7 800	10 000	**7309**	33.5	0.837
	100	25	50	1.5	1	58.5	40.0	5 950	4 100	6 600	8 900	**7309B**	43.0	0.854
50	72	12	24	0.6	0.3	16.6	14.5	1 690	1 470	9 200	12 000	**7910**	23.5	0.157
	80	16	32	1	0.6	23.7	20.1	2 410	2 050	8 600	11 000	**7010**	27	0.306
	90	20	40	1.1	0.6	41.5	31.5	4 200	3 200	7 900	10 000	**7210**	30	0.457
	90	20	40	1.1	0.6	37.5	28.6	3 800	2 920	6 700	9 000	**7210B**	39.5	0.466
	110	27	54	2	1	74.5	52.5	7 600	5 350	7 100	9 400	**7310**	36.5	1.09
	110	27	54	2	1	68.0	48.0	6 950	4 950	6 000	8 100	**7310B**	47	1.11
55	80	13	26	1	0.6	17.3	16.1	1 770	1 640	8 400	11 000	**7911**	26	0.214
	90	18	36	1.1	0.6	31.0	26.3	3 150	2 680	7 900	11 000	**7011**	30	0.447
	100	21	42	1.5	1	51.0	39.5	5 200	4 050	7 100	9 500	**7211**	33	0.6
	100	21	42	1.5	1	46.5	36.0	4 700	3 700	6 100	8 200	**7211B**	43	0.612
	120	29	58	2	1	86.0	61.5	8 750	6 300	6 400	8 600	**7311**	40	1.39
	120	29	58	2	1	79.0	56.5	8 050	5 800	5 500	7 300	**7311B**	52	1.42

1) This value achieved with machined cages; when pressed cages are used, 80% of this value is acceptable.
2) Bearing numbers appended with the code "**B**" have a contact angle of 40°; bearings with this code have a contact angle of 30°.
3) Smallest allowable dimension for chamfer dimension r or r_1.

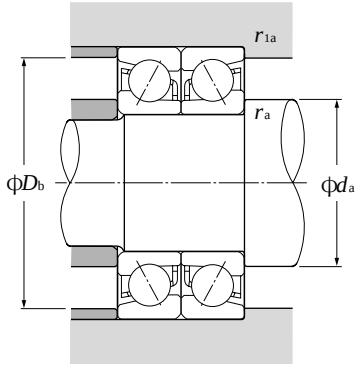

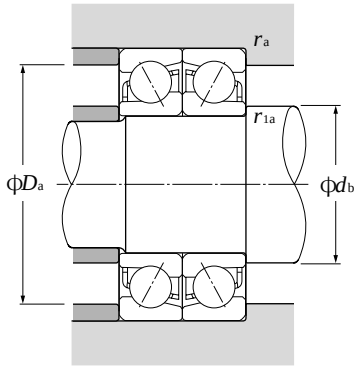

Dynamic equivalent radial load

$P_r = XF_r + YF_a$

Contact angle	e	Single, DT				DB, DF			
		$F_a/F_r \leqq e$		$F_a/F_r > e$		$F_a/F_r \leqq e$		$F_a/F_r > e$	
		X	Y	X	Y	X	Y	X	Y
30°	0.80	1	0	0.39	0.76	1	0.78	0.63	1.24
40°	1.14	1	0	0.35	0.57	1	0.55	0.57	0.93

Static equivalent radial load

$P_{or} = X_o F_r + Y_o F_a$

Contact angle	Single, DT		DB, DF	
	X_o	Y_o	X_o	Y_o
30°	0.5	0.33	1	0.66
40°	0.5	0.26	1	0.52

For single and DT arrangement,
When $P_{or} < F_r$ use $P_{or} = F_r$

Basic load ratings dynamic (duplex) kN C_r	Basic load ratings static (duplex) kN C_{or}	Basic load ratings dynamic (duplex) kgf C_r	Basic load ratings static (duplex) kgf C_{or}	Limiting speeds[1] (duplex) min^{-1} grease	Limiting speeds[1] (duplex) min^{-1} oil	Bearing numbers[2] DB	DF	DT	Abutment and fillet dimensions mm d_a min	d_b min	D_a max	D_b max	r_{as} max	r_{1as} max
36.5	29.6	3 750	3 000	9 800	13 000	DB	DF	DT	35.5	34.5	56.5	57.5	1	0.6
33.5	27.1	3 400	2 760	8 600	11 000	DB	DF	DT	35.5	34.5	56.5	57.5	1	0.6
54.5	44.5	5 550	4 550	8 900	12 000	DB	DF	DT	37	34.5	65	67.5	1	0.6
50.0	41.0	5 100	4 200	7 700	10 000	DB	DF	DT	37	34.5	65	67.5	1	0.6
19.5	17.7	1 990	1 810	10 000	13 000	DB	DF	DT	39.5	39.5	50.5	52.5	0.6	0.3
28.5	25.1	2 900	2 560	9 400	13 000	DB	DF	DT	40.5	40.5	56.5	57.5	1	0.6
48.5	40.0	4 900	4 100	8 600	11 000	DB	DF	DT	42	39.5	65	67.5	1	0.6
44.0	36.5	4 500	3 750	7 500	10 000	DB	DF	DT	42	39.5	65	67.5	1	0.6
65.0	52.5	6 600	5 350	7 800	10 000	DB	DF	DT	43.5	40.5	71.5	74.5	1.5	1
59.5	48.5	6 100	4 950	6 800	9 000	DB	DF	DT	43.5	40.5	71.5	74.5	1.5	1
20.6	20.4	2 100	2 080	9 000	12 000	DB	DF	DT	44.5	44.5	57.5	59.5	0.6	0.3
30.5	29.2	3 100	2 970	8 300	11 000	DB	DF	DT	45.5	45.5	62.5	63.5	1	0.6
57.5	50.5	5 850	5 150	7 700	10 000	DB	DF	DT	47	44.5	73.0	75.5	1	0.6
52.0	46.0	5 300	4 700	6 700	8 900	DB	DF	DT	47	44.5	73	75.5	1	0.6
79.5	66.0	8 100	6 700	6 900	9 200	DB	DF	DT	48.5	45.5	81.5	84.5	1.5	1
73.0	60.5	7 400	6 200	6 000	8 000	DB	DF	DT	48.5	45.5	81.5	84.5	1.5	1
25.5	25.7	2 600	2 620	8 100	11 000	DB	DF	DT	49.5	49.5	63.5	65.5	0.6	0.3
36.0	35.5	3 700	3 600	7 500	10 000	DB	DF	DT	50.5	50.5	69.5	70.5	1	0.6
64.5	57.5	6 550	5 850	6 900	9 200	DB	DF	DT	52	49.5	78	80.5	1	0.6
58.5	52.5	5 950	5 350	6 000	8 000	DB	DF	DT	52	49.5	78	80.5	1	0.6
103	88.0	10 500	8 950	6 200	8 200	DB	DF	DT	53.5	50.5	91.5	94.5	1.5	1
95.0	80.5	9 650	8 250	5 400	7 200	DB	DF	DT	53.5	50.5	91.5	94.5	1.5	1
27.0	28.9	2 750	2 950	7 300	9 800	DB	DF	DT	54.5	54.5	67.5	69.5	0.6	0.3
38.5	40.0	3 900	4 100	6 800	9 100	DB	DF	DT	55.5	55.5	74.5	75.5	1	0.6
67.0	63.0	6 850	6 400	6 300	8 300	DB	DF	DT	57	54.5	83	85.5	1	0.6
60.5	57.0	6 200	5 850	5 500	7 300	DB	DF	DT	57	54.5	83	85.5	1	0.6
121	105	12 300	10 700	5 600	7 500	DB	DF	DT	60	55.5	100	104.5	2	1
111	96.0	11 300	9 850	4 900	6 500	DB	DF	DT	60	55.5	100	104.5	2	1
28.1	32.0	2 870	3 300	6 700	8 900	DB	DF	DT	60.5	60.5	74.5	75.5	1	0.6
50.5	52.5	5 150	5 350	6 300	8 400	DB	DF	DT	62	62	83	85.5	1	0.6
83.0	79.0	8 450	8 050	5 700	7 600	DB	DF	DT	63.5	60.5	91.5	94.5	1.5	1
75.0	72.0	7 650	7 350	5 000	6 600	DB	DF	DT	63.5	60.5	91.5	94.5	1.5	1
139	123	14 200	12 600	5 100	6 800	DB	DF	DT	65	60.5	110	114.5	2	1
128	113	13 000	11 600	4 500	5 900	DB	DF	DT	65	60.5	110	114.5	2	1

Note: For bearing series **79** and **70**, inner rings are constructed with groove abutments on both sides. Therefore, the inner ring chamfer dimension r_1 is identical to dimension r. Furthermore, the radius r_{1a} of the shaft corner roundness is likewise identical to r_a.

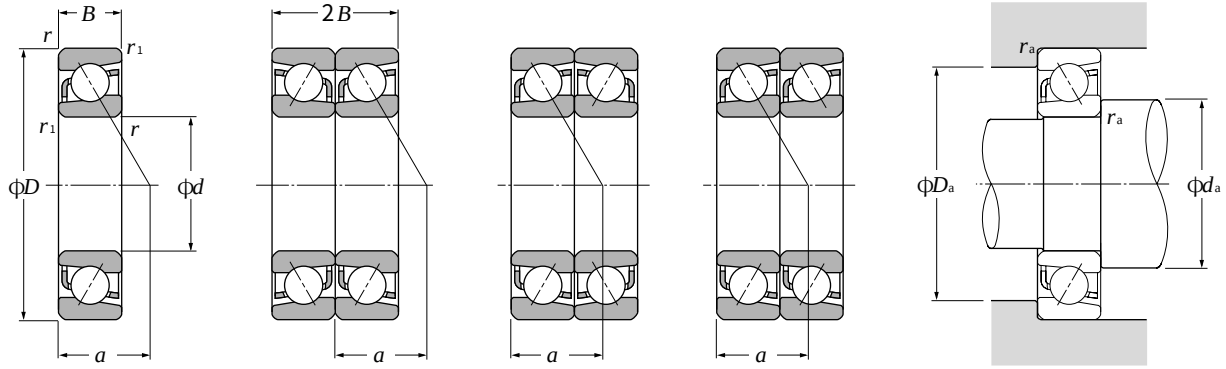

Single | **Back-to-back arrangement (DB)** | **Face-to-face arrangement (DF)** | **Tandem arrangement (DT)**

d 60 ~ 85mm

Boundary dimensions						Basic load ratings				Limiting speeds[1]		Bearing[2] numbers	Load centerkg	Mass
						dynamic	static	dynamic	static					kg
		mm				kN		kgf		min^{-1}			mm	single
d	*D*	*B*	2*B*	$r_{s\,min}$[3]	$r_{ls\,min}$[3]	C_r	C_{or}	C_r	C_{or}	grease	oil		*a*	(approx.)
60	85	13	26	1	0.6	18.1	17.4	1 840	1 780	7 800	10 000	**7912**	27.5	0.23
	95	18	36	1.1	0.6	32.0	28.1	3 250	2 860	7 200	9 600	**7012**	31.5	0.478
	110	22	44	1.5	1	61.5	49.0	6 300	5 000	6 600	8 800	**7212**	36	0.765
	110	22	44	1.5	1	56.0	44.5	5 700	4 550	5 700	7 600	**7212B**	47.5	0.78
	130	31	62	2.1	1.1	98.0	71.5	10 000	7 300	5 900	7 900	**7312**	43	1.74
	130	31	62	2.1	1.1	90.0	66.0	9 200	6 700	5 100	6 800	**7312B**	56	1.77
65	90	13	26	1	0.6	18.3	18.0	1 860	1 840	7 200	9 600	**7913**	29	0.245
	100	18	36	1.1	0.6	33.5	31.5	3 450	3 200	6 700	9 000	**7013**	33	0.509
	120	23	46	1.5	1	70.5	58.0	7 150	5 900	6 100	8 100	**7213**	38	0.962
	120	23	46	1.5	1	63.5	52.5	6 500	5 350	5 200	7 000	**7213B**	50.5	0.981
	140	33	66	2.1	1.1	111	82.0	11 300	8 350	5 500	7 300	**7313**	46	2.11
	140	33	66	2.1	1.1	102	75.0	10 400	7 700	4 700	6 300	**7313B**	59.5	2.15
70	100	16	32	1	0.6	26.2	26.2	2 670	2 670	6 700	9 000	**7914**	32.5	0.397
	110	20	40	1.1	0.6	42.5	39.5	4 350	4 000	6 200	8 300	**7014**	36	0.705
	125	24	48	1.5	1	76.5	63.5	7 800	6 500	5 700	7 600	**7214**	40	1.09
	125	24	48	1.5	1	69.0	58.0	7 050	5 900	4 900	6 500	**7214B**	53	1.11
	150	35	70	2.1	1.1	125	93.5	12 700	9 550	5 100	6 800	**7314**	49.5	2.56
	150	35	70	2.1	1.1	114	86	11 700	8 800	4 400	5 800	**7314B**	63.5	2.61
75	105	16	32	1	0.6	26.50	27.1	2 710	2 760	6 300	8 400	**7915**	34	0.42
	115	20	40	1.1	0.6	43.50	41.5	4 450	4 250	5 800	7 800	**7015**	37.5	0.745
	130	25	50	1.5	1	79.0	68.5	8 050	7 000	5 300	7 100	**7215**	42.5	1.17
	130	25	50	1.5	1	71.5	62.0	7 300	6 350	4 500	6 000	**7215B**	56	1.19
	160	37	74	2.1	1.1	136	106	13 800	10 800	4 800	6 300	**7315**	52.5	3.07
	160	37	74	2.1	1.1	125	97.5	12 700	9 900	4 100	5 400	**7315B**	68	3.13
80	110	16	32	1	0.6	26.9	28.0	2 740	2 860	5 900	7 800	**7916**	35.5	0.444
	125	22	44	1.1	0.6	53.5	50.5	5 450	5 150	5 500	7 300	**7016**	40.5	0.994
	140	26	52	2	1	89.0	76.0	9 100	7 750	5 000	6 600	**7216**	45	1.39
	140	26	52	2	1	80.5	69.5	8 200	7 050	4 300	5 700	**7216B**	59	1.42
	170	39	78	2.1	1.1	147	119	15 000	12 100	4 500	5 900	**7316**	55.5	3.65
	170	39	78	2.1	1.1	135	109	13 800	11 100	3 800	5 100	**7316B**	72	3.72
85	120	18	36	1.1	0.6	36.0	38.0	3 700	3 850	5 500	7 400	**7917**	38.5	0.628
	130	22	44	1.1	0.6	54.5	53.5	5 600	5 450	5 100	6 900	**7017**	42	1.04
	150	28	56	2	1	99.5	88.5	10 100	9 050	4 700	6 200	**7217**	48	1.78
	150	28	56	2	1	90.0	80.5	9 150	8 200	4 000	5 300	**7217B**	63.5	1.82

1) This value achieved with machined cages; when pressed cages are used, 80% of this value is acceptable.
2) Bearing numbers appended with the code "**B**" have a contact angle of 40°; bearings with this code have a contact angle of 30°.
3) Smallest allowable dimension for chamfer dimension *r* or r_1.

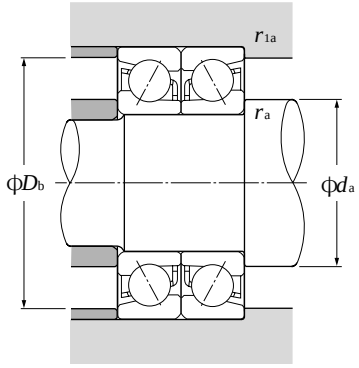

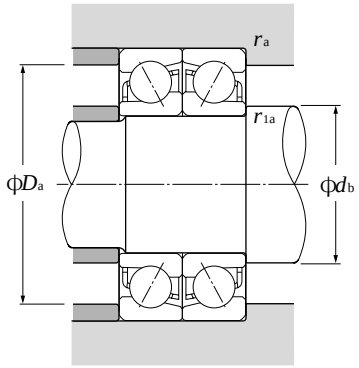

Dynamic equivalent radial load

$P_r = XF_r + YF_a$

Contact angle	e	Single, DT				DB, DF			
		$F_a/F_r \leqq e$		$F_a/F_r > e$		$F_a/F_r \leqq e$		$F_a/F_r > e$	
		X	Y	X	Y	X	Y	X	Y
30°	0.80	1	0	0.39	0.76	1	0.78	0.63	1.24
40°	1.14	1	0	0.35	0.57	1	0.55	0.57	0.93

Static equivalent radial load

$P_{or} = X_o F_r + Y_o F_a$

Contact angle	Single, DT		DB, DF	
	X_o	Y_o	X_o	Y_o
30°	0.5	0.33	1	0.66
40°	0.5	0.26	1	0.52

For single and DT arrangement,
When $P_{or} < F_r$ use $P_{or} = F_r$

Basic load ratings dynamic (duplex) kN C_r	Basic load ratings static (duplex) kN C_{or}	Basic load ratings dynamic (duplex) kgf C_r	Basic load ratings static (duplex) kgf C_{or}	Limiting speeds[1] (duplex) min^{-1} grease	Limiting speeds[1] (duplex) min^{-1} oil	Bearing numbers[2] DB	DF	DT	Abutment and fillet dimensions mm d_a min	d_b min	D_a max	D_b max	r_{as} max	r_{1as} max
29.3	35.0	2 990	3 550	6 200	8 300	DB	DF	DT	65.5	65.5	79.5	80.5	1	0.6
52.0	56.0	5 300	5 700	5 800	7 700	DB	DF	DT	67	67	88	90.5	1	0.6
100	98.0	10 200	10 000	5 300	7 000	DB	DF	DT	68.5	65.5	101.5	104.5	1.5	1
91.0	89.0	9 250	9 100	4 600	6 100	DB	DF	DT	68.5	65.5	101.5	104.5	1.5	1
159	143	16 200	14 600	4 700	6 300	DB	DF	DT	72	67	118	123	2	1
146	132	14 900	13 400	4 100	5 500	DB	DF	DT	72	67	118	123	2	1
29.7	36.0	3 050	3 700	5 700	7 600	DB	DF	DT	70.5	70.5	84.5	85.5	1	0.6
55.0	62.5	5 600	6 400	5 400	7 100	DB	DF	DT	72	72	93	95.5	1	0.6
114	116	11 600	11 800	4 900	6 500	DB	DF	DT	73.5	70.5	111.5	114.5	1.5	1
103	105	10 500	10 700	4 200	5 600	DB	DF	DT	73.5	70.5	111.5	114.5	1.5	1
180	164	18 400	16 700	4 400	5 800	DB	DF	DT	77	72	128	133	2	1
166	151	16 900	15 400	3 800	5 100	DB	DF	DT	77	72	128	133	2	1
42.5	52.5	4 350	5 350	5 300	7 100	DB	DF	DT	75.5	75.5	94.5	95.5	1	0.6
69.5	78.5	7 050	8 050	5 000	6 600	DB	DF	DT	77	77	103	105.5	1	0.6
124	127	12 600	13 000	4 500	6 000	DB	DF	DT	78.5	75.5	116.5	119.5	1.5	1
112	116	11 500	11 800	3 900	5 200	DB	DF	DT	78.5	75.5	116.5	119.5	1.5	1
203	187	20 700	19 100	4 100	5 400	DB	DF	DT	82	77	138	143	2	1
186	172	19 000	17 600	3 500	4 700	DB	DF	DT	82	77	138	143	2	1
43.0	54.0	4 400	5 500	5 000	6 700	DB	DF	DT	80.5	80.5	99.5	100.5	1	0.6
71.0	83.5	7 250	8 500	4 600	6 200	DB	DF	DT	82	82	108	110.5	1	0.6
128	137	13 100	14 000	4 200	5 600	DB	DF	DT	83.5	80.5	121.5	124.5	1.5	1
116	124	11 800	12 700	3 700	4 900	DB	DF	DT	83.5	80.5	121.5	124.5	1.5	1
221	212	22 500	21 600	3 800	5 000	DB	DF	DT	87	82	148	153	2	1
202	195	20 600	19 800	3 300	4 400	DB	DF	DT	87	82	148	153	2	1
43.5	56.0	4 450	5 700	4 700	6 200	DB	DF	DT	85.5	85.5	104.5	105.5	1	0.6
86.5	101	8 850	10 300	4 400	5 800	DB	DF	DT	87	87	118	120.5	1	0.6
145	152	14 700	15 500	3 900	5 300	DB	DF	DT	90	85.5	130	134.5	2	1
131	139	13 300	14 100	3 400	4 600	DB	DF	DT	90	85.5	130	134.5	2	1
239	238	24 400	24 200	3 500	4 700	DB	DF	DT	92	87	158	163	2	1
219	218	22 300	22 300	3 100	4 100	DB	DF	DT	92	87	158	163	2	1
59.0	76.0	6 000	7 750	4 400	5 900	DB	DF	DT	92	92	113	115.5	1	0.6
89.0	107	9 050	10 900	4 100	5 500	DB	DF	DT	92	92	123	125.5	1	0.6
162	177	16 500	18 100	3 700	5 000	DB	DF	DT	95	90.5	140	144.5	2	1
146	161	14 900	16 400	3 200	4 300	DB	DF	DT	95	90.5	140	144.5	2	1

Note: For bearing series **79** and **70**, inner rings are constructed with groove abutments on both sides. Therefore, the inner ring chamfer dimension r_1 is identical to dimension r. Furthermore, the radius r_{1a} of the shaft corner roundness is likewise identical to r_a.

Single and Duplex Angular Contact Ball Bearings

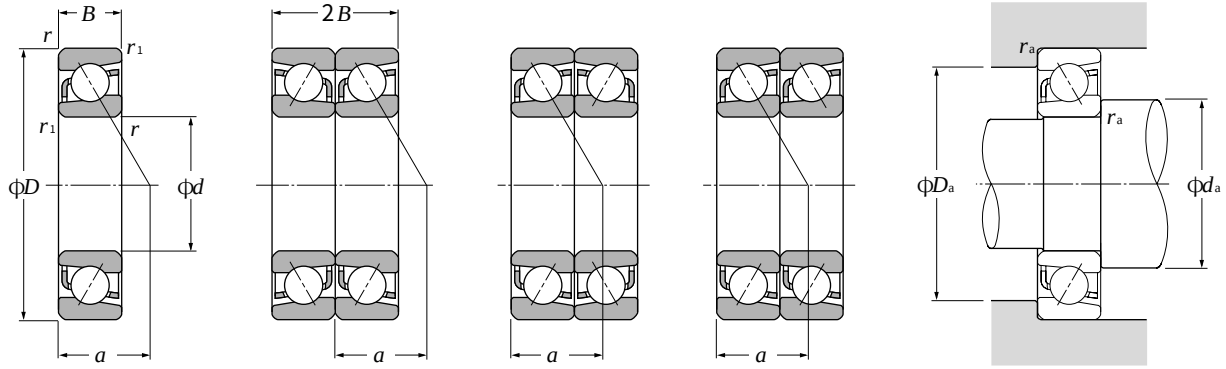

Single | **Back-to-back arrangement (DB)** | **Face-to-face arrangement (DF)** | **Tandem arrangement (DT)**

d 85～120mm

Boundary dimensions						Basic load ratings				Limiting speeds[1]		Bearing[2] numbers	Load centerkg	Mass
						dynamic	static	dynamic	static					kg
mm						kN		kgf		min^{-1}			mm	single
d	*D*	*B*	2*B*	$r_{s\,min}$[3]	$r_{ls\,min}$[3]	C_r	C_{or}	C_r	C_{or}	grease	oil		*a*	(approx.)
85	180	41	82	3	1.1	159	133	16 200	13 500	4 200	5 600	**7317**	59	4.34
	180	41	82	3	1.1	146	122	14 800	12 400	3 600	4 800	**7317B**	76	4.43
90	125	18	36	1.1	0.6	36.0	38.0	3 650	3 850	5 200	7 000	**7918**	40	0.658
	140	24	48	1.5	1	65.0	63.5	6 650	6 450	4 900	6 500	**7018**	45	1.35
	160	30	60	2.0	1	118	103	12 000	10 500	4 400	5 900	**7218**	51	2.18
	160	30	60	2.0	1	107	94.0	10 900	9 550	3 800	5 000	**7218B**	67.5	2.22
	190	43	86	3.0	1.1	171	147	17 400	15 000	4 000	5 300	**7318**	62	5.06
	190	43	86	3.0	1.1	156	135	15 900	13 800	3 400	4 500	**7318B**	80.5	5.16
95	130	18	36	1.1	0.6	37.0	40.5	3 800	4 150	5 000	6 600	**7919**	41.5	0.688
	145	24	48	1.5	1	67.0	67.0	6 800	6 800	4 600	6 100	**7019**	46.5	1.41
	170	32	64	2.1	1.1	133	118	13 600	12 000	4 100	5 500	**7219**	54.5	2.67
	170	32	64	2.1	1.1	121	107	12 300	11 000	3 500	4 700	**7219B**	71.5	2.72
	200	45	90	3	1.1	183	162	18 600	16 600	3 700	5 000	**7319**	65	5.89
	200	45	90	3	1.1	167	149	17 100	15 200	3 200	4 200	**7319B**	84.5	6
100	140	20	40	1.1	0.6	48.0	52.5	4 900	5 350	4 700	6 200	**7920**	44.5	0.934
	150	24	48	1.5	1	68.5	70.5	6 950	7 200	4 400	5 800	**7020**	48	1.47
	180	34	68	2.1	1.1	144	126	14 700	12 800	3 900	5 200	**7220**	57.5	3.2
	180	34	68	2.1	1.1	130	114	13 300	11 700	3 400	4 500	**7220B**	76	3.26
	215	47	94	3	1.1	207	193	21 100	19 700	3 500	4 700	**7320**	69	7.18
	215	47	94	3	1.1	190	178	19 400	18 100	3 000	4 000	**7320B**	89.5	7.32
105	145	20	40	1.1	0.6	48.5	54.5	4 950	5 550	4 400	5 900	**7921**	46	0.972
	160	26	52	2	1	80.0	81.5	8 150	8 350	4 100	5 500	**7021**	51.5	1.86
	190	36	72	2.1	1.1	157	142	16 000	14 400	3 700	5 000	**7221**	60.5	3.79
	190	36	72	2.1	1.1	142	129	14 500	13 100	3 200	4 300	**7221B**	80	3.87
	225	49	98	3	1.1	220	210	22 400	21 500	3 400	4 500	**7321**	72	8.2
	225	49	98	3	1.1	202	194	20 600	19 700	2 900	3 800	**7321B**	93.5	8.36
110	150	20	40	1.1	0.6	49.5	56.0	5 050	5 700	4 200	5 700	**7922**	47.5	1.01
	170	28	56	2	1	92.0	93.0	9 350	9 450	3 900	5 300	**7022**	54.5	2.3
	200	38	76	2.1	1.1	170	158	17 300	16 100	3 500	4 700	**7222**	64	4.45
	200	38	76	2.1	1.1	154	144	15 700	14 700	3 000	4 000	**7222B**	84	4.54
	240	50	100	3	1.1	246	246	25 100	25 100	3 200	4 300	**7322**	76	9.6
	240	50	100	3	1.1	226	226	23 000	23 100	2 700	3 700	**7322B**	99	9.8
120	165	22	44	1.1	0.6	61.0	69.5	6 200	7 100	3 900	5 200	**7924**	52	1.66

1) This value achieved with machined cages; when pressed cages are used, 80% of this value is acceptable.
2) Bearing numbers appended with the code "**B**" have a contact angle of 40˚; bearings with this code have a contact angle of 30˚.
3) Smallest allowable dimension for chamfer dimension *r* or r_1.

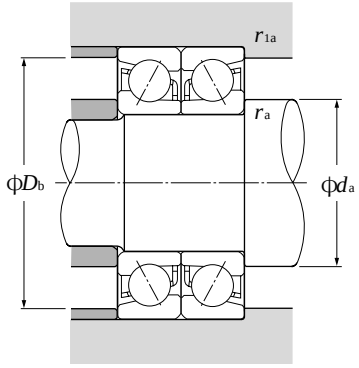

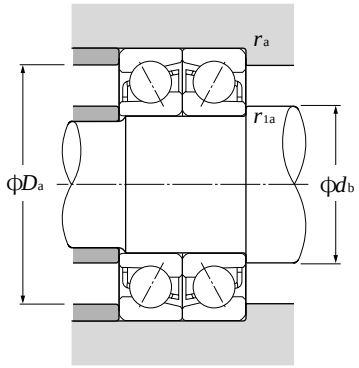

Dynamic equivalent radial load

$P_r = XF_r + YF_a$

Contact angle	e	Single, DT				DB, DF			
		$F_a/F_r \leqq e$		$F_a/F_r > e$		$F_a/F_r \leqq e$		$F_a/F_r > e$	
		X	Y	X	Y	X	Y	X	Y
30°	0.80	1	0	0.39	0.76	1	0.78	0.63	1.24
40°	1.14	1	0	0.35	0.57	1	0.55	0.57	0.93

Static equivalent radial load

$P_{or} = X_o F_r + Y_o F_a$

Contact angle	Single, DT		DB, DF	
	X_o	Y_o	X_o	Y_o
30°	0.5	0.33	1	0.66
40°	0.5	0.26	1	0.52

For single and DT arrangement,
When $P_{or} < F_r$ use $P_{or} = F_r$

Basic load ratings dynamic (duplex) kN C_r	Basic load ratings static (duplex) kN C_{or}	Basic load ratings dynamic (duplex) kgf C_r	Basic load ratings static (duplex) kgf C_{or}	Limiting speeds[1] (duplex) min^{-1} grease	Limiting speeds[1] (duplex) min^{-1} oil	Bearing numbers[2] DB	DF	DT	Abutment and fillet dimensions mm d_a min	d_b min	D_a max	D_b max	r_{as} max	r_{1as} max
258	265	26 300	27 000	3 300	4 500	DB	DF	DT	99	92	166	173	2.5	1
236	244	24 100	24 900	2 900	3 900	DB	DF	DT	99	92	166	173	2.5	1
58.0	75.5	5 900	7 700	4 200	5 500	DB	DF	DT	97	97	118	120.5	1	0.6
106	127	10 800	12 900	3 900	5 200	DB	DF	DT	98.5	98.5	131.5	134.5	1.5	1
191	206	19 500	21 000	3 500	4 700	DB	DF	DT	100	95.5	150	154.5	2	1
173	188	17 700	19 100	3 100	4 100	DB	DF	DT	100	95.5	150	154.5	2	1
277	294	28 300	30 000	3 200	4 200	DB	DF	DT	104	97	176	183	2.5	1
254	270	25 900	27 600	2 700	3 700	DB	DF	DT	104	97	176	183	2.5	1
60.5	81.5	6 150	8 300	3 900	5 300	DB	DF	DT	102	102	123	125.5	1	0.6
109	134	11 100	13 600	3 700	4 900	DB	DF	DT	103.5	103.5	136.5	139.5	1.5	1
217	236	22 100	24 100	3 300	4 400	DB	DF	DT	107	102	158	163	2	1
196	215	20 000	21 900	2 900	3 800	DB	DF	DT	107	102	158	163	2	1
297	325	30 500	33 000	3 000	3 900	DB	DF	DT	109	102	186	193	2.5	1
272	298	27 700	30 500	2 600	3 400	DB	DF	DT	109	102	186	193	2.5	1
78.0	105	7 950	10 700	3 700	5 000	DB	DF	DT	107	107	133	135.5	1	0.6
111	141	11 300	14 400	3 500	4 600	DB	DF	DT	108.5	108.5	141.5	144.5	1.5	1
233	251	23 800	25 600	3 100	4 200	DB	DF	DT	112	107	168	173	2	1
212	229	21 600	23 300	2 700	3 600	DB	DF	DT	112	107	168	173	2	1
335	385	34 500	39 500	2 800	3 700	DB	DF	DT	114	107	201	208	2.5	1
310	355	31 500	36 000	2 400	3 300	DB	DF	DT	114	107	201	208	2.5	1
79.0	109	8 050	11 100	3 500	4 700	DB	DF	DT	112	112	138	140.5	1	0.6
130	163	13 300	16 700	3 300	4 400	DB	DF	DT	115	115	150	154.5	2	1
254	283	25 900	28 900	3 000	4 000	DB	DF	DT	117	112	178	183	2	1
231	258	23 500	26 300	2 600	3 500	DB	DF	DT	117	112	178	183	2	1
355	420	36 500	43 000	2 700	3 600	DB	DF	DT	119	112	211	218	2.5	1
330	385	33 500	39 500	2 300	3 100	DB	DF	DT	119	112	211	218	2.5	1
80.0	112	8 150	11 400	3 400	4 500	DB	DF	DT	117	117	143	145.5	1	0.6
149	186	15 200	18 900	3 100	4 200	DB	DF	DT	120	120	160	164.5	2	1
276	315	28 100	32 500	2 800	3 800	DB	DF	DT	122	117	188	193	2	1
250	289	25 500	29 400	2 500	3 300	DB	DF	DT	122	117	188	193	2	1
400	490	41 000	50 000	2 600	3 400	DB	DF	DT	124	117	226	233	2.5	1
365	455	37 500	46 000	2 200	3 000	DB	DF	DT	124	117	226	233	2.5	1
99.0	139	10 100	14 200	3 100	4 100	DB	DF	DT	127	127	158	160.5	1	0.6

Note: For bearing series **79** and **70**, inner rings are constructed with groove abutments on both sides. Therefore, the inner ring chamfer dimension r_1 is identical to dimension r. Furthermore, the radius r_{1a} of the shaft corner roundness is likewise identical to r_a.

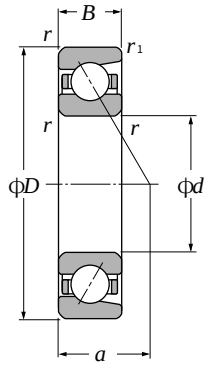

Single

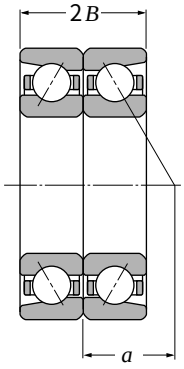

Back-to-back arrangement (DB)

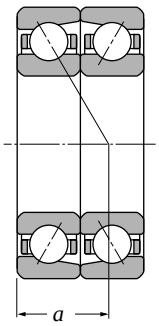

Face-to-face arrangement (DF)

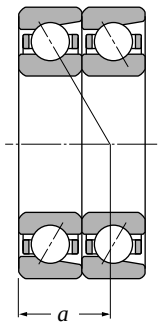

Tandem arrangement (DT)

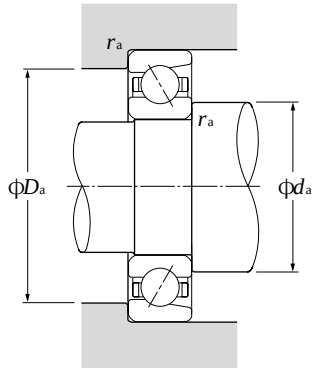

d 120～170mm

Boundary dimensions mm						Basic load ratings dynamic kN	static kN	dynamic kgf	static kgf	Limiting speeds min^{-1}		Bearing numbers[1]	Load centerkg mm	Mass kg single (approx.)
d	*D*	*B*	2*B*	$r_{s\,min}$[2]	$r_{ls\,min}$[2]	C_r	C_{or}	C_r	C_{or}	grease	oil		*a*	
120	180	28	56	2	1	93.5	98.5	9 550	10 000	3 600	4 800	**7024**	57.5	2.47
	215	40	80	2.1	1.1	183	177	18 600	18 100	3 200	4 300	**7224**	68.5	6.26
	215	40	80	2.1	1.1	165	162	16 900	16 500	2 800	3 700	**7224B**	90.5	6.26
	260	55	110	3	1.1	246	252	25 100	25 700	2 900	3 900	**7324**	82.5	14.7
	260	55	110	3	1.1	225	231	23 000	23 600	2 500	3 300	**7324B**	107	14.7
130	180	24	48	1.5	1	75.0	87.5	7 650	8 900	3 600	4 700	**7926**	56.5	1.82
	200	33	66	2	1	117	125	12 000	12 800	3 300	4 400	**7026**	64	3.73
	230	40	80	3	1.1	196	198	20 000	20 200	3 000	4 000	**7226**	72	7.15
	230	40	80	3	1.1	177	180	18 100	18 300	2 500	3 400	**7226B**	95.5	7.15
	280	58	116	4	1.5	273	293	27 900	29 800	2 700	3 600	**7326**	88	17.6
	280	58	116	4	1.5	250	268	25 500	27 400	2 300	3 100	**7326B**	115	17.6
140	190	24	48	1.5	1	75.5	90.0	7 700	9 150	3 300	4 400	**7928**	59.5	1.94
	210	33	66	2	1	120	133	12 200	13 500	3 100	4 100	**7028**	67	3.96
	250	42	84	3	1.1	203	215	20 700	21 900	2 700	3 600	**7228**	77.5	8.78
	250	42	84	3	1.1	183	195	18 700	19 900	2 300	3 100	**7228B**	103	8.78
	300	62	124	4	1.5	300	335	30 500	34 500	2 500	3 300	**7328**	94.5	21.5
	300	62	124	4	1.5	275	310	28 100	31 500	2 100	2 800	**7328B**	123	21.5
150	210	28	56	2	1	97.5	117	9 900	11 900	3 100	4 100	**7930**	66	2.96
	225	35	70	2.1	1.1	137	154	14 000	15 700	2 800	3 800	**7030**	71.5	4.82
	270	45	90	3	1.1	232	259	23 700	26 400	2 500	3 400	**7230**	83	11
	270	45	90	3	1.1	210	235	21 400	24 000	2 200	2 900	**7230B**	111	11
	320	65	130	4	1.5	330	380	33 500	39 000	2 300	3 100	**7330**	100	25.1
	320	65	130	4	1.5	300	350	30 500	36 000	2 000	2 600	**7330B**	131	25.1
160	220	28	56	2	1	98.5	121	10 000	12 300	2 800	3 800	**7932**	69	3.13
	240	38	76	2.1	1.1	155	176	15 800	18 000	2 700	3 600	**7032**	77	5.96
	290	48	96	3	1.1	263	305	26 800	31 500	2 400	3 200	**7232**	89	13.7
	290	48	96	3	1.1	238	279	24 200	28 400	2 000	2 700	**7232B**	118	13.7
	340	68	136	4	1.5	345	420	35 500	43 000	2 100	2 800	**7332**	106	29.8
	340	68	136	4	1.5	315	385	32 000	39 500	1 800	2 400	**7332B**	139	29.8
170	230	28	56	2	1	102	129	10 400	13 100	2 700	3 600	**7934**	71.5	3.29
	260	42	84	2.1	1.1	186	214	18 900	21 900	2 500	3 300	**7034**	83	7.96
	310	52	104	4	1.5	295	360	30 000	36 500	2 200	3 000	**7234**	95.5	17
	310	52	104	4	1.5	266	325	27 200	33 000	1 900	2 500	**7234B**	127	17
	360	72	144	4	1.5	390	485	39 500	49 500	2 000	2 700	**7334**	113	35.3

1) Bearing numbers appended with the code "**B**" have a contact angle of 40˚; bearings with this code have a contact angle of 30˚.
2) Smallest allowable dimension for chamfer dimension *r* or r_1.

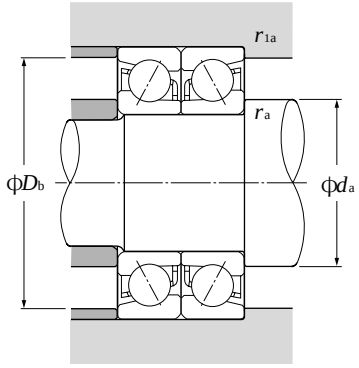

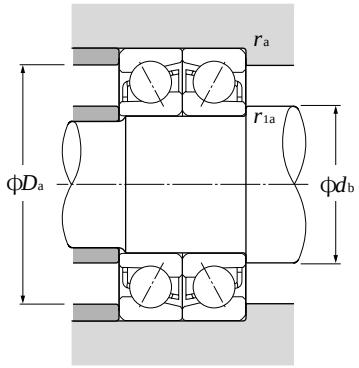

Dynamic equivalent radial load

$P_r = XF_r + YF_a$

Contact angle	e	Single, DT				DB, DF			
		$F_a/F_r \leqq e$		$F_a/F_r > e$		$F_a/F_r \leqq e$		$F_a/F_r > e$	
		X	Y	X	Y	X	Y	X	Y
30°	0.80	1	0	0.39	0.76	1	0.78	0.63	1.24
40°	1.14	1	0	0.35	0.57	1	0.55	0.57	0.93

Static equivalent radial load

$P_{or} = X_o F_r + Y_o F_a$

Contact angle	Single, DT		DB, DF	
	X_o	Y_o	X_o	Y_o
30°	0.5	0.33	1	0.66
40°	0.5	0.26	1	0.52

For single and DT arrangement,
When $P_{or} < F_r$ use $P_{or} = F_r$

Basic load ratings dynamic (duplex) C_r kN	Basic load ratings static (duplex) C_{or} kN	Basic load ratings dynamic (duplex) C_r kgf	Basic load ratings static (duplex) C_{or} kgf	Limiting speeds (duplex) min^{-1} grease	Limiting speeds (duplex) min^{-1} oil	Bearing numbers[1] DB	DF	DT	Abutment and fillet dimensions mm d_a min	D_a max	D_b max	r_{as} max	r_{1as} max
152	197	15 500	20 100	2 900	3 800	DB	DF	DT	130	170	174.5	2	1
297	355	30 500	36 000	2 600	3 400	DB	DF	DT	132	203	208	2	1
269	325	27 400	33 000	2 300	3 000	DB	DF	DT	132	203	208	2	1
400	505	41 000	51 500	2 300	3 100	DB	DF	DT	134	246	253	2.5	1
365	460	37 500	47 000	2 000	2 700	DB	DF	DT	134	246	253	2.5	1
121	175	12 400	17 800	2 800	3 800	DB	DF	DT	138.5	171.5	174.5	1.5	1
191	251	19 400	25 600	2 600	3 500	DB	DF	DT	140	190	194.5	2	1
320	395	32 500	40 500	2 400	3 100	DB	DF	DT	144	216	223	2.5	1
288	360	29 400	36 500	2 100	2 700	DB	DF	DT	144	216	223	2.5	1
445	585	45 500	59 500	2 100	2 800	DB	DF	DT	148	262	271.5	3	1.5
405	535	41 500	54 500	1 900	2 500	DB	DF	DT	148	262	271.5	3	1.5
123	180	12 500	18 300	2 600	3 500	DB	DF	DT	148.5	181.5	184.5	1.5	1
194	265	19 800	27 000	2 400	3 300	DB	DF	DT	150	200	204.5	2	1
330	430	33 500	44 000	2 200	2 900	DB	DF	DT	154	236	243	2.5	1
297	390	30 500	40 000	1 900	2 500	DB	DF	DT	154	236	243	2.5	1
490	670	50 000	68 500	2 000	2 600	DB	DF	DT	158	282	291.5	3	1.5
445	615	45 500	63 000	1 700	2 300	DB	DF	DT	158	282	291.5	3	1.5
158	234	16 100	23 900	2 400	3 300	DB	DF	DT	160	200	204.5	2	1
222	305	22 700	31 500	2 300	3 000	DB	DF	DT	162	213	218	2	1
375	515	38 500	53 000	2 000	2 700	DB	DF	DT	164	256	263	2.5	1
340	470	34 500	48 000	1 800	2 400	DB	DF	DT	164	256	263	2.5	1
535	765	54 500	78 000	1 800	2 400	DB	DF	DT	168	302	311.5	3	1.5
490	700	50 000	71 500	1 600	2 100	DB	DF	DT	168	302	311.5	3	1.5
160	241	16 300	24 600	2 300	3 000	DB	DF	DT	170	210	214.5	2	1
252	355	25 700	36 000	2 100	2 800	DB	DF	DT	172	228	233	2	1
425	615	43 500	62 500	1 900	2 500	DB	DF	DT	174	276	283	2.5	1
385	555	39 500	57 000	1 600	2 200	DB	DF	DT	174	276	283	2.5	1
565	845	57 500	86 000	1 700	2 300	DB	DF	DT	178	322	331.5	3	1.5
515	770	52 500	79 000	1 500	2 000	DB	DF	DT	178	322	331.5	3	1.5
165	257	16 900	26 200	2 100	2 800	DB	DF	DT	180	220	224.5	2	1
300	430	31 000	43 500	2 000	2 600	DB	DF	DT	182	248	253	2	1
480	715	49 000	73 000	1 800	2 400	DB	DF	DT	188	292	301.5	3	1.5
435	650	44 000	66 500	1 500	2 100	DB	DF	DT	188	292	301.5	3	1.5
630	970	64 500	99 000	1 600	2 100	DB	DF	DT	188	342	351.5	3	1.5

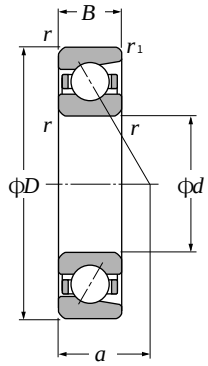

Single

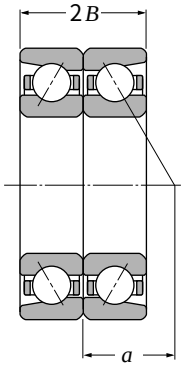

Back-to-back arrangement (DB)

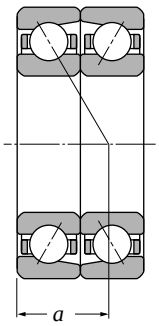

Face-to-face arrangement (DF)

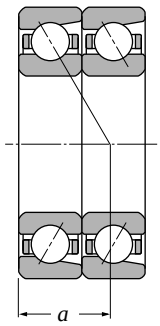

Tandem arrangement (DT)

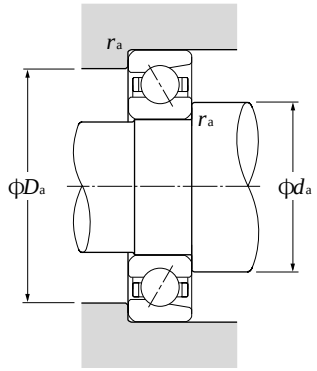

d 170～300mm

Boundary dimensions mm						Basic load ratings dynamic kN	static kN	dynamic kgf	static kgf	Limiting speeds min-1		Bearing 1) numbers	Load centerkg mm	Mass kg single (approx.)
d	*D*	*B*	2*B*	$r_{s\,min}$ 2)	$r_{ls\,min}$ 2)	C_r	C_{or}	C_r	C_{or}	grease	oil		*a*	
170	360	72	144	4	1.5	355	445	36 000	45 500	1 700	2 300	**7334B**	147	35.3
180	250	33	66	2	1	131	163	13 400	16 600	2 500	3 300	**7936**	78.5	4.87
	280	46	92	2.1	1.1	219	266	22 300	27 100	2 300	3 100	**7036**	89.5	10.4
	320	52	104	4	1.5	305	385	31 000	39 000	2 100	2 800	**7236**	98	17.7
	320	52	104	4	1.5	276	350	28 100	35 500	1 800	2 400	**7236B**	131	17.7
	380	75	150	4	1.5	410	535	41 500	54 500	1 900	2 500	**7336**	118	40.9
	380	75	150	4	1.5	375	490	38 000	50 000	1 600	2 100	**7336B**	155	40.9
190	260	33	66	2	1	133	169	13 500	17 200	2 400	3 200	**7938**	81.5	5.1
	290	46	92	2.1	1.1	224	280	22 800	28 600	2 200	2 900	**7038**	92.5	10.8
	340	55	110	4	1.5	305	390	31 000	39 500	2 000	2 600	**7238**	104	21.3
	340	55	110	4	1.5	273	355	27 800	36 000	1 700	2 200	**7238B**	139	21.3
	400	78	156	5	2	430	585	44 000	59 500	1 800	2 300	**7338**	124	47
	400	78	156	5	2	390	535	40 000	54 500	1 500	2 000	**7338B**	163	47
200	280	38	76	2.1	1.1	185	231	18 900	23 600	2 200	3 000	**7940**	88.5	7.15
	310	51	102	2.1	1.1	252	325	25 700	33 000	2 100	2 800	**7040**	99	14
	360	58	116	4	1.5	335	450	34 500	46 000	1 900	2 500	**7240**	110	25.3
	360	58	116	4	1.5	305	410	31 000	41 500	1 600	2 100	**7240B**	146	25.3
	420	80	160	5	2	450	605	46 000	62 000	1 700	2 200	**7340**	130	53.1
	420	80	160	5	2	410	555	42 000	56 500	1 400	1 900	**7340B**	170	53.1
220	300	38	76	2.1	1.1	187	239	19 000	24 300	2 000	2 700	**7944**	94	7.74
240	320	38	76	2.1	1.1	193	255	19 600	26 000	1 800	2 400	**7948**	100	8.34
260	360	46	92	2.1	1.1	258	375	26 300	38 000	1 700	2 200	**7952**	112	14
280	380	46	92	2.1	1.1	261	385	26 600	39 500	1 500	2 100	**7956**	118	14.8
300	420	56	112	3	1.1	325	520	33 500	53 000	1 400	1 900	**7960**	132	23.7

1) Bearing numbers appended with the code "**B**" have a contact angle of 40°; bearings with this code have a contact angle of 30°.
2) Smallest allowable dimension for chamfer dimension r or r_1.

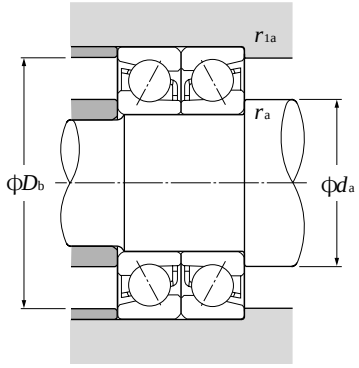

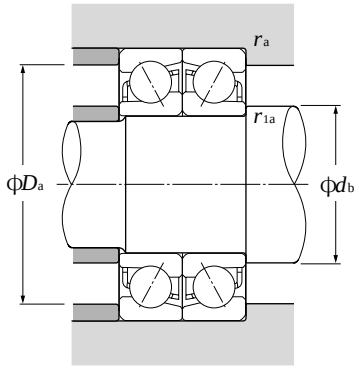

Dynamic equivalent radial load

$P_r = XF_r + YF_a$

Contact angle	e	Single, DT				DB, DF			
		$F_a/F_r \leqq e$		$F_a/F_r > e$		$F_a/F_r \leqq e$		$F_a/F_r > e$	
		X	Y	X	Y	X	Y	X	Y
30°	0.80	1	0	0.39	0.76	1	0.78	0.63	1.24
40°	1.14	1	0	0.35	0.57	1	0.55	0.57	0.93

Static equivalent radial load

$P_{or} = X_o F_r + Y_o F_a$

Contact angle	Single, DT		DB, DF	
	X_o	Y_o	X_o	Y_o
30°	0.5	0.33	1	0.66
40°	0.5	0.26	1	0.52

For single and DT arrangement,
When $P_{or} < F_r$ use $P_{or} = F_r$

Basic load ratings dynamic (duplex) kN C_r	Basic load ratings static (duplex) kN C_{or}	Basic load ratings dynamic (duplex) kgf C_r	Basic load ratings static (duplex) kgf C_{or}	Limiting speeds (duplex) min^{-1} grease	Limiting speeds (duplex) min^{-1} oil	Bearing numbers[1] DB	DF	DT	Abutment and fillet dimensions mm d_a min	D_a max	D_b max	r_{as} max	r_{1as} max
575	890	59 000	90 500	1 400	1 800	DB	DF	DT	188	342	351.5	3	1.5
213	325	21 700	33 500	2 000	2 700	DB	DF	DT	190	240	244.5	2	1
355	530	36 500	54 000	1 900	2 500	DB	DF	DT	192	268	273	2	1
495	770	50 500	78 500	1 700	2 200	DB	DF	DT	198	302	311.5	3	1.5
450	700	45 500	71 000	1 400	1 900	DB	DF	DT	198	302	311.5	3	1.5
665	1 070	68 000	109 000	1 500	2 000	DB	DF	DT	198	362	371.5	3	1.5
605	975	62 000	99 500	1 300	1 700	DB	DF	DT	198	362	371.5	3	1.5
216	335	22 000	34 500	1 900	2 500	DB	DF	DT	200	250	254.5	2	1
365	560	37 000	57 000	1 800	2 300	DB	DF	DT	202	278	283	2	1
495	780	50 000	79 500	1 600	2 100	DB	DF	DT	208	322	331.5	3	1.5
445	705	45 000	72 000	1 400	1 800	DB	DF	DT	208	322	331.5	3	1.5
695	1 170	71 000	119 000	1 400	1 900	DB	DF	DT	212	378	390	4	2
635	1 070	64 500	109 000	1 200	1 600	DB	DF	DT	212	378	390	4	2
300	465	30 500	47 000	1 800	2 400	DB	DF	DT	212	268	273	2	1
410	650	41 500	66 000	1 700	2 200	DB	DF	DT	212	298	303	2	1
550	900	56 000	92 000	1 500	2 000	DB	DF	DT	218	342	351.5	3	1.5
495	815	50 500	83 000	1 300	1 700	DB	DF	DT	218	342	351.5	3	1.5
730	1 210	74 500	124 000	1 300	1 800	DB	DF	DT	222	398	410	4	2
665	1 110	68 000	113 000	1 200	1 500	DB	DF	DT	222	398	410	4	2
305	475	31 000	48 500	1 600	2 100	DB	DF	DT	232	288	293	2	1
315	510	32 000	52 000	1 500	1 900	DB	DF	DT	252	308	313	2	1
420	750	42 500	76 500	1 300	1 800	DB	DF	DT	272	348	353	2	1
425	775	43 000	79 000	1 200	1 600	DB	DF	DT	292	368	373	2	1
530	1 040	54 000	106 000	1 100	1 500	DB	DF	DT	314	406	413	2.5	1

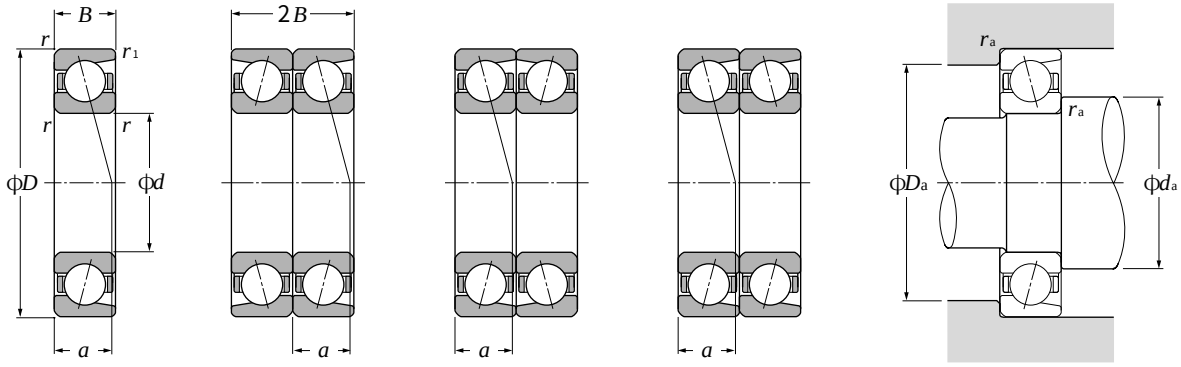

Single | **Back-to-back arrangement (DB)** | **Face-to-face arrangement (DF)** | **Tandem arrangement (DT)**

d 10～40mm

Boundary dimensions mm						Basic load ratings dynamic kN	static kN	dynamic kgf	static kgf	Factor	Limiting speeds[1] min^{-1}		Bearing numbers	Load center mm	Mass kg
d	*D*	*B*	2*B*	$r_{s\,min}$[2]	$r_{ls\,min}$[2]	C_r	C_{or}	C_r	C_{or}	f_o	grease	oil		*a*	single (approx.)
10	26	8	16	0.3	0.15	4.90	2.20	500	225	12.6	43 000	58 000	**7000C**	6.5	0.019
	30	9	18	0.6	0.3	5.40	2.64	555	269	13.4	41 000	55 000	**7200C**	7	0.029
12	28	8	16	0.3	0.15	5.40	2.64	555	269	13.4	39 000	52 000	**7001C**	6.5	0.021
	32	10	20	0.6	0.3	7.10	3.45	720	355	12.9	36 000	49 000	**7201C**	8	0.036
15	32	9	18	0.3	0.15	6.25	3.40	635	345	14.1	34 000	45 000	**7002C**	7.5	0.029
	35	11	22	0.6	0.3	9.00	4.50	915	460	12.9	32 000	42 000	**7202C**	9	0.045
	42	13	26	1	0.6	13.30	6.85	1 360	700	12.5	28 000	38 000	**7302C**	10.5	0.081
17	35	10	20	0.3	0.15	7.70	4.10	785	420	13.8	31 000	41 000	**7003C**	8.5	0.038
	40	12	24	0.6	0.3	11.2	5.75	1 140	590	13.0	29 000	38 000	**7203C**	10	0.062
	47	14	28	1	0.6	15.7	8.25	1 600	840	12.5	26 000	35 000	**7303C**	11.5	0.109
20	42	12	24	0.6	0.3	10.5	6.05	1 070	615	14.1	27 000	36 000	**7004C**	10	0.066
	47	14	28	1	0.6	14.6	8.15	1 490	835	13.4	25 000	34 000	**7204C**	11.5	0.1
	52	15	30	1.1	0.6	18.5	9.95	1 890	1 020	12.6	23 000	31 000	**7304C**	12.5	0.14
25	37	7	14	0.3	0.15	5.05	3.85	515	390	16.2	27 000	36 000	**7805C**	7.5	0.021
	42	9	18	0.3	0.15	7.85	5.40	800	555	15.5	25 000	33 000	**7905C**	9	0.042
	47	12	24	0.6	0.3	11.7	7.45	1 190	755	14.7	23 000	31 000	**7005C**	11	0.078
	52	15	30	1	0.6	16.6	10.2	1 690	1 050	14.0	21 000	28 000	**7205C**	12.5	0.121
	62	17	34	1.1	0.6	26.4	15.3	2 690	1 560	12.8	19 000	26 000	**7305C**	14.5	0.222
30	42	7	14	0.3	0.15	5.35	4.50	545	460	16.5	23 000	31 000	**7806C**	8.5	0.025
	47	9	18	0.3	0.15	8.30	6.25	845	640	15.9	21 000	28 000	**7906C**	9.5	0.048
	55	13	26	1	0.6	15.1	10.3	1 540	1 050	14.9	20 000	26 000	**7006C**	12.5	0.112
	62	16	32	1	0.6	23.0	14.7	2 350	1 500	14.0	18 000	24 000	**7206C**	14	0.191
	72	19	38	1.1	0.6	32.5	20.3	3 300	2 070	13.4	16 000	22 000	**7306C**	16.5	0.33
35	47	7	14	0.3	0.15	5.80	5.25	590	535	16.4	20 000	27 000	**7807C**	9	0.028
	55	10	20	0.6	0.3	13.2	9.65	1 340	985	15.5	19 000	25 000	**7907C**	11	0.073
	62	14	28	1	0.6	19.1	13.7	1 950	1 390	15.0	17 000	23 000	**7007C**	13.5	0.149
	72	17	34	1.1	0.6	30.5	19.9	3 100	2 030	13.9	16 000	21 000	**7207C**	15.5	0.273
	80	21	42	1.5	1	40.5	25.8	4 100	2 630	13.3	14 000	19 000	**7307C**	18	0.44
40	52	7	14	0.3	0.15	6.05	5.75	615	585	16.2	18 000	24 000	**7808C**	9.5	0.031
	62	12	24	0.6	0.3	14.0	11.1	1 420	1 140	15.9	17 000	22 000	**7908C**	13	0.109
	68	15	30	1	0.6	20.6	15.9	2 100	1 620	15.4	15 000	21 000	**7008C**	14.5	0.184
	80	18	36	1.1	0.6	36.5	25.2	3 700	2 570	14.2	14 000	19 000	**7208C**	17	0.35

1) This value was achieved with laminated phenol resin machined cages; in the case of molded resin cages,with oil lubricant, the value will be 75% of this.
2) Minimal allowable dimension for chamfer dimension *r* or r_1.

High Speed Single and Duplex Angular Contact Ball Bearings

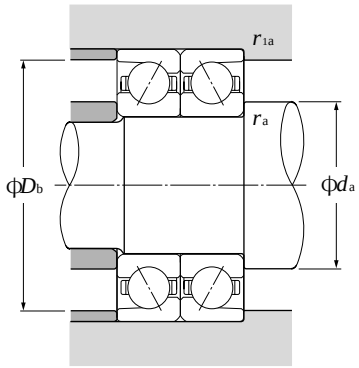

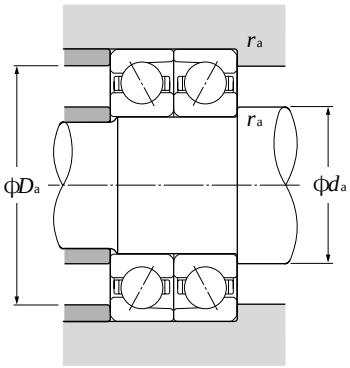

Dynamic equivalent radial load

$P_r = XF_r + YF_a$

$\frac{i f_o \cdot F_a}{C_{or}}$ [3]	e	Single, DT				DB, DF			
		$F_a/F_r \leqq e$		$F_a/F_r > e$		$F_a/F_r \leqq e$		$F_a/F_r > e$	
		X	Y	X	Y	X	Y	X	Y
0.178	0.38				1.47		1.65		2.39
0.357	0.40				1.40		1.57		2.28
0.714	0.43				1.30		1.46		2.11
1.07	0.46				1.23		1.38		2.00
1.43	0.47	1	0	0.44	1.19	1	1.34	0.72	1.93
2.14	0.50				1.12		1.26		1.82
3.57	0.55				1.02		1.14		1.66
5.35	0.56				1.00		1.12		1.63
7.14	0.56				1.00		1.12		1.63

Static equivalent radial load

$P_{or} = X_o F_r + Y_o F_a$

Single, DT		DB, DF	
X_o	Y_o	X_o	Y_o
0.5	0.46	1	0.92

For single and DT arrangement,
When $P_{or} < F_r$ use $P_{or} = F_r$

Basic load ratings dynamic (duplex) C_r kN	Basic load ratings static (duplex) C_{or} kN	Basic load ratings dynamic (duplex) C_r kgf	Basic load ratings static (duplex) C_{or} kgf	Limiting speeds[1] (duplex) grease min^{-1}	Limiting speeds[1] (duplex) oil min^{-1}	Bearing numbers DB	Bearing numbers DF	Bearing numbers DT	Abutment and fillet dimensions mm d_a min	D_a max	D_b max	r_{as} max	r_{1as} max
7.95	4.40	815	450	34 000	46 000	DB	DF	DT	12.5	23.5	24.8	0.3	0.15
8.80	5.25	900	540	32 000	43 000	DB	DF	DT	14.5	25.5	27.5	0.6	0.3
8.80	5.25	900	540	31 000	41 000	DB	DF	DT	14.5	25.5	26.8	0.3	0.15
11.5	6.95	1 170	705	29 000	38 000	DB	DF	DT	16.5	27.5	29.5	0.6	0.3
10.1	6.75	1 030	690	27 000	36 000	DB	DF	DT	17.5	29.5	30.8	0.3	0.15
14.6	9.05	1 490	920	25 000	33 000	DB	DF	DT	19.5	30.5	32.5	0.6	0.3
21.6	13.7	2 200	1 400	23 000	30 000	DB	DF	DT	20.5	36.5	37.5	1	0.6
12.5	8.25	1 280	840	24 000	33 000	DB	DF	DT	19.5	32.5	33.8	0.3	0.15
18.1	11.5	1 850	1 180	23 000	30 000	DB	DF	DT	21.5	35.5	37.5	0.6	0.3
25.6	16.5	2 610	1 680	21 000	27 000	DB	DF	DT	22.5	41.5	42.5	1	0.6
17.0	12.1	1 740	1 230	22 000	29 000	DB	DF	DT	24.5	37.5	39.5	0.6	0.3
23.7	16.3	2 420	1 670	20 000	27 000	DB	DF	DT	25.5	41.5	42.5	1	0.6
30.0	19.9	3 050	2 030	18 000	24 000	DB	DF	DT	27	45	47.5	1	0.6
8.20	7.65	835	780	21 000	28 000	DB	DF	DT	27.5	34.5	35.8	0.3	0.15
12.7	10.8	1 300	1 110	19 000	26 000	DB	DF	DT	27.5	39.5	40.8	0.3	0.15
19.0	14.9	1 940	1 510	18 000	24 000	DB	DF	DT	29.5	42.5	44.5	0.6	0.3
27.0	20.5	2 750	2 090	17 000	22 000	DB	DF	DT	30.5	46.5	47.5	1	0.6
43.0	30.5	4 350	3 100	15 000	20 000	DB	DF	DT	32	55	57.5	1	0.6
8.70	9.00	890	920	18 000	24 000	DB	DF	DT	32.5	39.5	40.8	0.3	0.15
13.5	12.5	1 380	1 280	17 000	22 000	DB	DF	DT	32.5	44.5	45.8	0.3	0.15
24.6	20.6	2 510	2 100	16 000	21 000	DB	DF	DT	35.5	49.5	50.5	1	0.6
37.5	29.5	3 800	3 000	14 000	19 000	DB	DF	DT	35.5	56.5	57.5	1	0.6
52.5	40.5	5 350	4 150	13 000	17 000	DB	DF	DT	37	65	67.5	1	0.6
9.40	10.5	960	1 070	16 000	21 000	DB	DF	DT	37.5	44.5	45.8	0.3	0.15
21.4	19.3	2 180	1 970	15 000	20 000	DB	DF	DT	39.5	50.5	52.5	0.6	0.3
31.0	27.3	3 150	2 790	14 000	18 000	DB	DF	DT	40.5	56.5	57.5	1	0.6
49.5	40.0	5 050	4 050	13 000	17 000	DB	DF	DT	42	65	67.5	1	0.6
65.5	51.5	6 700	5 250	11 000	15 000	DB	DF	DT	43.5	71.5	74.5	1.5	1
9.80	11.5	1 000	1 170	14 000	19 000	DB	DF	DT	42.5	49.5	50.8	0.3	0.15
22.7	22.3	2 310	2 270	13 000	18 000	DB	DF	DT	44.5	57.5	59.5	0.6	0.3
33.5	32.0	3 400	3 250	12 000	16 000	DB	DF	DT	45.5	62.5	63.5	1	0.6
59.0	50.5	6 000	5 150	11 000	15 000	DB	DF	DT	47	73	75.5	1	0.6

3) i is 2 for rear or front combination and 1 for single or parallel combination.
Note: This bearing has a contact angle of 15° and is manufactured with accuracies of JIS Class 5 or higher.

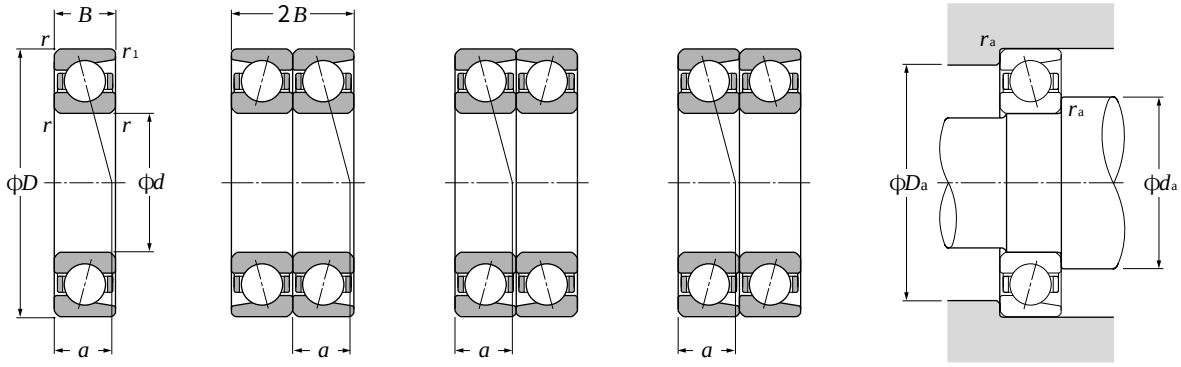

Single | **Back-to-back arrangement (DB)** | **Face-to-face arrangement (DF)** | **Tandem arrangement (DT)**

d 40 ~ 75mm

Boundary dimensions						Basic load ratings				Factor	Limiting speeds[1]		Bearing numbers	Load center	Mass
						dynamic	static	dynamic	static						
mm						kN		kgf			min^{-1}			mm	kg
d	*D*	*B*	2*B*	$r_{s\,min}$[2]	$r_{ls\,min}$[2]	C_r	C_{or}	C_r	C_{or}	f_o	grease	oil		*a*	single (approx.)
40	90	23	46	1.5	1	49.5	32.5	5 050	3 300	13.4	13 000	17 000	**7308C**	20	0.606
	58	7	14	0.3	0.15	6.25	6.25	640	640	16.0	16 000	21 000	**7809C**	10.4	0.030
	68	12	24	0.6	0.3	17.3	14.1	1 760	1 430	15.8	15 000	20 000	**7909C**	13.5	0.126
45	75	16	32	1	0.6	24.4	19.3	2 490	1 960	15.4	14 000	19 000	**7009C**	16	0.233
	85	19	38	1.1	0.6	41.0	28.8	4 150	2 940	14.2	13 000	17 000	**7209C**	18	0.4
	100	25	50	1.5	1	64.0	43.0	6 550	4 400	13.3	11 000	15 000	**7309C**	22.5	0.83
	65	7	14	0.3	0.15	7.90	8.05	805	820	16.1	14 000	19 000	**7810C**	11	0.049
	72	12	24	0.6	0.3	18.3	15.8	1 870	1 620	16.1	14 000	18 000	**7910C**	14	0.131
50	80	16	32	1	0.6	26.0	21.9	2 650	2 230	15.7	13 000	17 000	**7010C**	16.5	0.253
	90	20	40	1.1	0.6	43.0	31.5	4 350	3 250	14.5	12 000	15 000	**7210C**	19.5	0.454
	110	27	54	2	1	75.0	51.5	7 650	5 250	13.4	10 000	14 000	**7310C**	24.5	1.05
	72	9	18	0.3	0.15	13.1	12.7	1 330	1 300	16.4	13 000	18 000	**7811C**	13	0.079
	80	13	26	1.0	0.6	19.1	17.7	1 950	1 810	16.3	12 000	16 000	**7911C**	15.5	0.178
55	90	18	36	1.1	0.6	34.0	28.6	3 500	2 920	15.5	12 000	15 000	**7011C**	18.5	0.37
	100	21	42	1.5	1	53.0	40.0	5 400	4 100	14.5	11 000	14 000	**7211C**	21	0.593
	120	29	58	2.0	1	87.0	60.5	8 850	6 200	13.4	9 400	13 000	**7311C**	26.5	1.34
	78	10	20	0.3	0.15	13.4	13.6	1 370	1 390	16.3	12 000	16 000	**7812C**	14	0.101
	85	13	26	1	0.6	20.0	19.5	2 040	1 990	16.5	11 000	15 000	**7912C**	16	0.191
60	95	18	36	1.1	0.6	35.0	30.5	3 550	3 150	15.7	11 000	14 000	**7012C**	19.5	0.387
	110	22	44	1.5	1	64.0	49.5	6 550	5 050	14.5	9 700	13 000	**7212C**	22.5	0.757
	130	31	62	2.1	1.1	99.0	70.5	10 100	7 150	13.4	8 700	12 000	**7312C**	28.5	1.68
	85	10	20	0.6	0.3	14.1	14.9	1 440	1 520	16.2	11 000	15 000	**7813C**	15	0.122
	90	13	26	1	0.6	20.2	20.4	2 060	2 080	16.5	11 000	14 000	**7913C**	17	0.204
65	100	18	36	1.1	0.6	37.0	34.5	3 800	3 500	15.9	9 900	13 000	**7013C**	20	0.421
	120	23	46	1.5	1	70.0	55.0	7 100	5 600	14.6	9 000	12 000	**7213C**	24	0.948
	140	33	66	2.1	1.1	112	80.5	11 400	8 200	13.4	8 100	11 000	**7313C**	30	2.06
	90	10	20	0.6	0.3	14.5	15.8	1 470	1 610	16.1	10 000	14 000	**7814C**	15.5	0.13
	100	16	32	1	0.6	28.9	29.0	2 950	2 960	16.4	9 900	13 000	**7914C**	19.5	0.331
70	110	20	40	1.1	0.6	47.0	43.0	4 800	4 400	15.7	9 200	12 000	**7014C**	22	0.583
	125	24	48	1.5	1	76.0	60.0	7 750	6 150	14.6	8 300	11 000	**7214C**	25	1.04
	150	35	70	2.1	1.1	126	92.0	12 900	9 350	13.4	7 500	10 000	**7314C**	32	2.5
	95	10	20	0.6	0.3	14.8	16.7	1 510	1 700	16.0	9 700	13 000	**7815C**	16.5	0.138
75	105	16	32	1	0.6	29.4	30.5	3 000	3 100	16.5	9 200	12 000	**7915C**	20	0.35

1) This value was achieved with laminated phenol resin machined cages; in the case of molded resin cages,with oil lubricant, the value will be 75% of this.
2) Minimal allowable dimension for chamfer dimension *r* or r_1.

High Speed Single and Duplex Angular Contact Ball Bearings

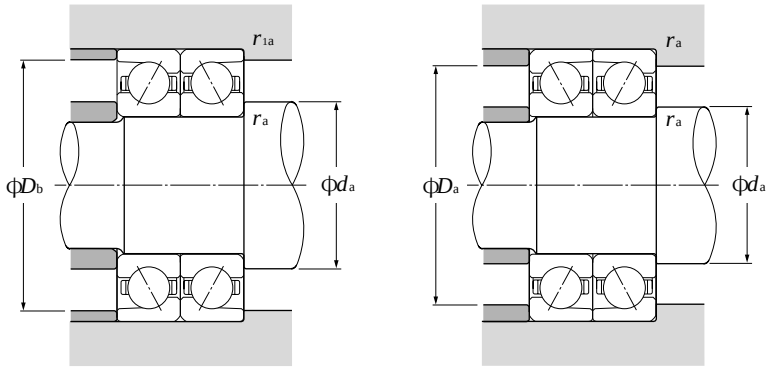

Dynamic equivalent radial load

$P_r = XF_r + YF_a$

$\frac{i f_o \cdot F_a}{C_{or}}$ [3]	e	Single, DT				DB, DF			
		$F_a/F_r \leqq e$		$F_a/F_r > e$		$F_a/F_r \leqq e$		$F_a/F_r > e$	
		X	Y	X	Y	X	Y	X	Y
0.178	0.38				1.47		1.65		2.39
0.357	0.40				1.40		1.57		2.28
0.714	0.43				1.30		1.46		2.11
1.07	0.46				1.23		1.38		2.00
1.43	0.47	1	0	0.44	1.19	1	1.34	0.72	1.93
2.14	0.50				1.12		1.26		1.82
3.57	0.55				1.02		1.14		1.66
5.35	0.56				1.00		1.12		1.63
7.14	0.56				1.00		1.12		1.63

Static equivalent radial load

$P_{or} = X_o F_r + Y_o F_a$

Single, DT		DB, DF	
X_o	Y_o	X_o	Y_o
0.5	0.46	1	0.92

For single and DT arrangement,
When $P_{or} < F_r$ use $P_{or} = F_r$

Basic load ratings dynamic (duplex) C_r kN	Basic load ratings static (duplex) C_{or} kN	Basic load ratings dynamic (duplex) C_r kgf	Basic load ratings static (duplex) C_{or} kgf	Limiting speeds[1] (duplex) grease min^{-1}	Limiting speeds[1] (duplex) oil min^{-1}	Bearing numbers DB	Bearing numbers DF	Bearing numbers DT	Abutment and fillet dimensions mm d_a min	D_a max	D_b max	r_{as} max	r_{1as} max
80.0	64.5	8 150	6 600	10 000	13 000	DB	DF	DT	48.5	81.5	84.5	1.5	1
10.2	12.5	1 040	1 280	13 000	17 000	DB	DF	DT	47.5	55.5	56.8	0.3	0.15
28.1	28.1	2 870	2 870	12 000	16 000	DB	DF	DT	49.5	63.5	65.5	0.6	0.3
39.5	38.5	4 050	3 950	11 000	15 000	DB	DF	DT	50.5	69.5	70.5	1	0.6
66.5	57.5	6 750	5 850	10 000	13 000	DB	DF	DT	52	78	80.5	1	0.6
104	86.0	10 600	8 800	9 000	12 000	DB	DF	DT	53.5	91.5	94.5	1.5	1
12.8	16.1	1 300	1 640	11 000	15 000	DB	DF	DT	52.5	62.5	63.8	0.3	0.15
29.8	31.5	3 050	3 250	11 000	14 000	DB	DF	DT	54.5	67.5	69.5	0.6	0.3
42.0	44.0	4 300	4 450	10 000	13 000	DB	DF	DT	55.5	74.5	75.5	1	0.6
69.5	63.5	7 100	6 450	9 100	12 000	DB	DF	DT	57	83	85.5	1	0.6
122	103	12 400	10 500	8 200	11 000	DB	DF	DT	60	100	104.5	2	1
21.2	25.5	2 160	2 600	10 000	14 000	DB	DF	DT	57.5	69.5	70.8	0.3	0.15
31.0	35.5	3 150	3 600	9 800	13 000	DB	DF	DT	60.5	74.5	75.5	1	0.6
55.5	57.5	5 650	5 850	9 200	12 000	DB	DF	DT	62	83	85.5	1	0.6
86.0	80.0	8 750	8 150	8 300	11 000	DB	DF	DT	63.5	91.5	94.5	1.5	1
141	121	14 400	12 400	7 500	9 900	DB	DF	DT	65	110	114.5	2	1
21.8	27.2	2 230	2 770	9 600	13 000	DB	DF	DT	62.5	75.5	76.8	0.3	0.15
32.5	39.0	3 300	4 000	9 000	12 000	DB	DF	DT	65.5	79.5	80.5	1	0.6
57.0	61.5	5 800	6 250	8 400	11 000	DB	DF	DT	67	88	90.5	1	0.6
104	99.0	10 600	10 100	7 700	10 000	DB	DF	DT	68.5	101.5	104.5	1.5	1
161	141	16 400	14 300	6 900	9 200	DB	DF	DT	72	118	123	2	1
22.9	29.9	2 340	3 050	8 900	12 000	DB	DF	DT	69.5	80.5	82.5	0.6	0.3
33.0	40.5	3 350	4 150	8 400	11 000	DB	DF	DT	70.5	84.5	85.5	1	0.6
60.5	68.5	6 150	7 000	7 800	10 000	DB	DF	DT	72	93	95.5	1	0.6
113	110	11 600	11 200	7 100	9 500	DB	DF	DT	73.5	111.5	114.5	1.5	1
182	161	18 600	16 400	6 400	8 500	DB	DF	DT	77	128	133	2	1
23.5	31.5	2 390	3 250	8 200	11 000	DB	DF	DT	74.5	85.5	87.5	0.6	0.3
47.0	58.0	4 800	5 900	7 800	10 000	DB	DF	DT	75.5	94.5	95.5	1	0.6
76.0	86.0	7 750	8 750	7 300	9 700	DB	DF	DT	77	103	105.5	1	0.6
123	120	12 600	12 300	6 600	8 800	DB	DF	DT	78.5	116.5	119.5	1.5	1
205	184	20 900	18 700	5 900	7 900	DB	DF	DT	82	138	143	2	1
24.0	33.5	2 450	3 400	7 700	10 000	DB	DF	DT	79.5	90.5	92.5	0.6	0.3
47.5	61.0	4 850	6 200	7 300	9 700	DB	DF	DT	80.5	99.5	100.5	1	0.6

3) i is 2 for rear or front combination and 1 for single or parallel combination.
Note: This bearing has a contact angle of 15° and is manufactured with accuracies of JIS Class 5 or higher.

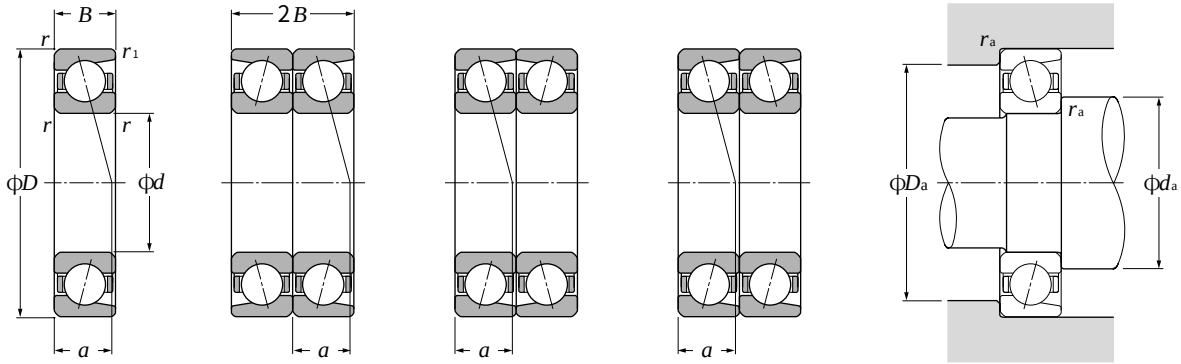

Single | **Back-to-back arrangement (DB)** | **Face-to-face arrangement (DF)** | **Tandem arrangement (DT)**

d 75～105mm

Boundary dimensions						Basic load ratings				Factor	Limiting speeds[1]		Bearing numbers	Load center	Mass
						dynamic	static	dynamic	static						
		mm				kN		kgf			min^{-1}			mm	kg
d	*D*	*B*	2*B*	$r_{s\,min}$[2]	$r_{ls\,min}$[2]	C_r	C_{or}	C_r	C_{or}	f_o	grease	oil		*a*	single (approx.)
75	115	20	40	1.1	0.6	48.0	45.5	4 900	4 650	15.9	8 600	11 000	7015C	22.5	0.63
	130	25	50	1.5	1	79.5	65.5	8 100	6 700	14.8	7 800	10 000	7215C	26.5	1.14
	160	37	74	2.1	1.1	137	104	14 000	10 600	13.4	7 000	9 300	7315C	34	3.09
80	100	10	20	0.6	0.3	15.1	17.6	1 540	1 790	15.9	9 100	12 000	7816C	17	0.146
	110	16	32	1	0.6	29.8	31.5	3 050	3 200	16.5	8 600	12 000	7916C	21	0.37
	125	22	44	1.1	0.6	58.5	55.5	6 000	5 650	15.7	8 000	11 000	7016C	24.5	0.822
	140	26	52	2	1	93.0	77.5	9 450	7 900	14.7	7 300	9 700	7216C	27.5	1.39
	170	39	78	2.1	1.1	149	117	15 200	11 900	13.5	6 500	8 700	7316C	36	3.55
85	110	13	26	1	0.6	22.1	24.7	2 250	2 520	16.1	8 600	11 000	7817C	19.5	0.257
	120	18	36	1.1	0.6	40.0	42.5	4 100	4 300	16.5	8 100	11 000	7917C	22.5	0.523
	130	22	44	1.1	0.6	60.0	58.5	6 150	6 000	15.9	7 600	10 000	7017C	25.5	0.862
	150	28	56	2	1	104	90.5	10 600	9 200	14.9	6 900	9 100	7217C	30	1.73
	180	41	82	3	1.1	161	130	16 400	13 300	13.5	6 200	8 200	7317C	38.5	4.18
90	115	13	26	1	0.6	22.7	26.1	2 320	2 670	16.1	8 100	11 000	7818C	20	0.27
	125	18	36	1.1	0.6	39.5	42.5	4 050	4 350	16.6	7 700	10 000	7918C	23.5	0.549
	140	24	48	1.5	1	71.5	69.0	7 300	7 050	15.7	7 100	9 500	7018C	27.5	1.12
	160	30	60	2	1	123	105	12 500	10 700	14.6	6 500	8 600	7218C	31.5	2.13
	190	43	86	3	1.1	183	158	18 700	16 100	13.5	5 800	7 800	7318C	40.5	4.88
95	120	13	26	1	0.6	23.4	27.6	2 380	2 820	16.0	7 600	10 000	7819C	21	0.283
	130	18	36	1.1	0.6	41.0	46.0	4 200	4 650	16.5	7 300	9 700	7919C	24	0.574
	145	24	48	1.5	1	73.5	73.0	7 500	7 450	15.9	6 800	9 000	7019C	28	1.17
	170	32	64	2.1	1.1	139	120	14 200	12 200	14.6	6 100	8 100	7219C	34	2.58
	200	45	90	3	1.1	196	174	20 000	17 800	13.5	5 500	7 300	7319C	42.5	5.65
100	125	13	26	1	0.6	23.5	28.3	2 400	2 890	16.0	7 200	9 600	7820C	21.5	0.296
	140	20	40	1.1	0.6	53.0	58.5	5 400	6 000	16.5	6 900	9 100	7920C	26	0.778
	150	24	48	1.5	1	75.5	77.0	7 700	7 900	16.0	6 400	8 600	7020C	28.5	1.25
	180	34	68	2.1	1.1	149	127	15 200	12 900	14.5	5 800	7 700	7220C	36	3.08
	215	47	94	3	1.1	222	207	22 700	21 100	13.4	5 200	6 900	7320C	44.5	6.9
105	130	13	26	1	0.6	24.1	29.8	2 460	3 050	15.9	6 900	9 200	7821C	22	0.31
	145	20	40	1.1	0.6	54.0	61.5	5 500	6 250	16.6	6 500	8 700	7921C	26.5	0.81
	160	26	52	2	1	88.0	89.5	9 000	9 100	15.9	6 100	8 100	7021C	31	1.53
	190	36	72	2.1	1.1	162	143	16 600	14 600	14.5	5 500	7 300	7221C	38	3.66
	225	49	98	3	1.1	236	226	24 100	23 000	13.4	4 900	6 600	7321C	46.5	7.86

1) This value was achieved with laminated phenol resin machined cages; in the case of molded resin cages,with oil lubricant, the value will be 75% of this.
2) Minimal allowable dimension for chamfer dimension *r* or r_1.

High Speed Single and Duplex Angular Contact Ball Bearings

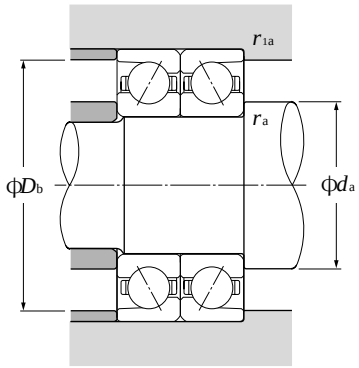

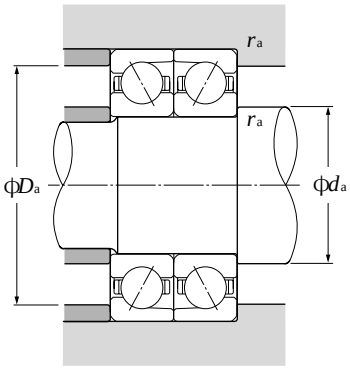

Dynamic equivalent radial load

$P_r = XF_r + YF_a$

$i f_o \cdot F_a / C_{or}$ [3]	e	Single, DT				DB, DF			
		$F_a/F_r \leqq e$		$F_a/F_r > e$		$F_a/F_r \leqq e$		$F_a/F_r > e$	
		X	Y	X	Y	X	Y	X	Y
0.178	0.38				1.47		1.65		2.39
0.357	0.40				1.40		1.57		2.28
0.714	0.43				1.30		1.46		2.11
1.07	0.46				1.23		1.38		2.00
1.43	0.47	1	0	0.44	1.19	1	1.34	0.72	1.93
2.14	0.50				1.12		1.26		1.82
3.57	0.55				1.02		1.14		1.66
5.35	0.56				1.00		1.12		1.63
7.14	0.56				1.00		1.12		1.63

Static equivalent radial load

$P_{or} = X_o F_r + Y_o F_a$

Single, DT		DB, DF	
X_o	Y_o	X_o	Y_o
0.5	0.46	1	0.92

For single and DT arrangement,
When $P_{or} < F_r$ use $P_{or} = F_r$

Basic load ratings (duplex) dynamic C_r kN	Basic load ratings (duplex) static C_{or} kN	Basic load ratings (duplex) dynamic C_r kgf	Basic load ratings (duplex) static C_{or} kgf	Limiting speeds [1] (duplex) grease min^{-1}	Limiting speeds [1] (duplex) oil min^{-1}	Bearing numbers DB	Bearing numbers DF	Bearing numbers DT	Abutment and fillet dimensions mm d_a min	D_a max	D_b max	r_{as} max	r_{1as} max
78.0	91.5	7 950	9 300	6 800	9 000	DB	DF	DT	82	108	110.5	1	0.6
129	131	13 100	13 400	6 200	8 200	DB	DF	DT	83.5	121.5	124.5	1.5	1
223	208	22 800	21 200	5 500	7 400	DB	DF	DT	87	148	153	2	1
24.6	35.0	2 510	3 600	7 200	9 600	DB	DF	DT	84.5	95.5	97.5	0.6	0.3
48.5	63.0	4 950	6 450	6 800	9 100	DB	DF	DT	85.5	104.5	105.5	1	0.6
95.5	111	9 700	11 300	6 400	8 500	DB	DF	DT	87	118	120.5	1	0.6
151	155	15 400	15 800	5 800	7 700	DB	DF	DT	90	130	134.5	2	1
242	234	24 700	23 800	5 200	6 900	DB	DF	DT	92	158	163	2	1
36.0	49.5	3 650	5 050	6 800	9 100	DB	DF	DT	90.5	104.5	105.5	1	0.6
65.0	84.5	6 650	8 650	6 400	8 600	DB	DF	DT	92	113	115.5	1	0.6
98.0	117	9 950	12 000	6 000	8 000	DB	DF	DT	92	123	125.5	1	0.6
169	181	17 200	18 400	5 400	7 200	DB	DF	DT	95	140	144.5	2	1
261	261	26 600	26 600	4 900	6 500	DB	DF	DT	99	166	173	2.5	1
37.0	52.5	3 750	5 350	6 400	8 500	DB	DF	DT	95.5	109.5	110.5	1	0.6
64.5	85.0	6 550	8 700	6 100	8 100	DB	DF	DT	97	118	120.5	1	0.6
116	138	11 900	14 100	5 700	7 500	DB	DF	DT	98.5	131.5	134.5	1.5	1
199	209	20 300	21 400	5 100	6 800	DB	DF	DT	100	150	154.5	2	1
297	315	30 500	32 000	4 600	6 100	DB	DF	DT	104	176	183	2.5	1
38.0	55.5	3 850	5 650	6 000	8 000	DB	DF	DT	100.5	114.5	115.5	1	0.6
67.0	91.5	6 850	9 350	5 800	7 700	DB	DF	DT	102	123	125.5	1	0.6
119	146	12 200	14 900	5 400	7 100	DB	DF	DT	103.5	136.5	139.5	1.5	1
226	240	23 000	24 400	4 800	6 400	DB	DF	DT	107	158	163	2	1
320	350	32 500	35 500	4 300	5 800	DB	DF	DT	109	186	193	2.5	1
38.0	56.5	3 900	5 750	5 700	7 600	DB	DF	DT	105.5	119.5	120.5	1	0.6
86.0	117	8 750	12 000	5 400	7 200	DB	DF	DT	107	133	135.5	1	0.6
122	154	12 500	15 800	5 100	6 800	DB	DF	DT	108.5	141.5	144.5	1.5	1
242	254	24 700	25 900	4 600	6 100	DB	DF	DT	112	168	173	2	1
360	415	37 000	42 000	4 100	5 500	DB	DF	DT	114	201	208	2.5	1
39.0	59.5	4 000	6 050	5 500	7 300	DB	DF	DT	110.5	124.5	125.5	1	0.6
87.5	123	8 900	12 500	5 200	6 900	DB	DF	DT	112	138	140.5	1	0.6
143	179	14 600	18 200	4 800	6 400	DB	DF	DT	115	150	154.5	2	1
264	286	26 900	29 100	4 400	5 800	DB	DF	DT	117	178	183	2	1
385	450	39 000	46 000	3 900	5 200	DB	DF	DT	119	211	218	2.5	1

3) i is 2 for rear or front combination and 1 for single or parallel combination.
Note: This bearing has a contact angle of 15° and is manufactured with accuracies of JIS Class 5 or higher.

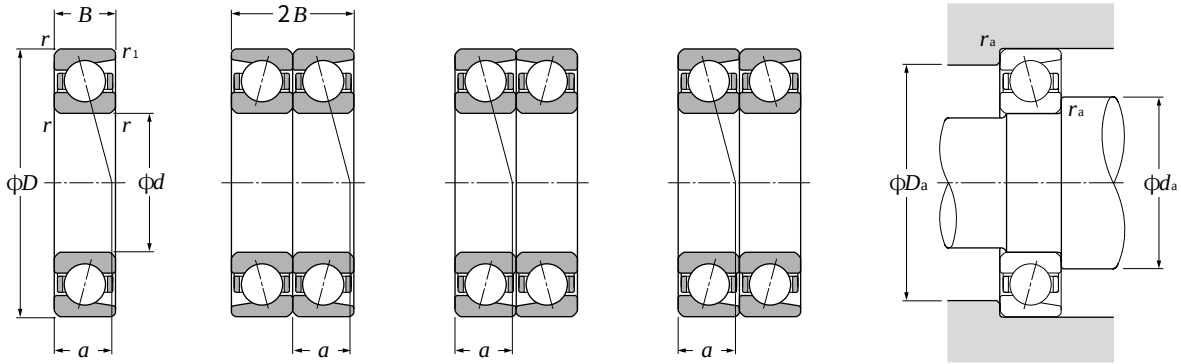

Single | **Back-to-back arrangement (DB)** | **Face-to-face arrangement (DF)** | **Tandem arrangement (DT)**

d 110～200mm

Boundary dimensions						Basic load ratings				Factor	Limiting speeds[1]		Bearing numbers	Load center	Mass
						dynamic	static	dynamic	static						
mm						kN		kgf			min^{-1}			mm	kg
d	*D*	*B*	2*B*	$r_{s\,min}$[2]	$r_{ls\,min}$[2]	C_r	C_{or}	C_r	C_{or}	f_o	grease	oil		*a*	single (approx.)
110	140	16	32	1	0.6	34.5	42.5	3 550	4 350	16.1	6 500	8 700	**7822C**	24.5	0.486
	150	20	40	1.1	0.6	54.5	63.5	5 550	6 450	16.5	6 200	8 300	**7922C**	27.5	0.843
	170	28	56	2	1	101	101	10 300	10 300	15.7	5 800	7 700	**7022C**	33	1.91
	200	38	76	2.1	1.1	176	160	17 900	16 300	14.5	5 200	6 900	**7222C**	40	4.29
	240	50	100	3	1.1	249	241	25 400	24 600	13.3	4 700	6 300	**7322C**	48.5	9.22
120	150	16	32	1	0.6	35.0	44.5	3 600	4 550	16.0	6 000	8 000	**7824C**	26	0.525
	165	22	44	1.1	0.6	67.5	78.5	6 850	8 000	16.6	5 700	7 600	**7924C**	30	1.38
	180	28	56	2	1	103	108	10 500	11 000	16.0	5 300	7 100	**7024C**	34	2.04
	215	40	80	2.1	1.1	199	192	20 200	19 600	14.6	4 800	6 400	**7224C**	42.5	5.16
130	165	18	36	1.1	0.6	47.0	59.5	4 750	6 050	16.1	5 500	7 400	**7826C**	29	0.911
	180	24	48	1.5	1	82.5	98.0	8 450	10 000	16.5	5 200	7 000	**7926C**	33	1.82
	200	33	66	2	1	129	137	13 200	14 000	15.9	4 900	6 500	**7026C**	38.5	3.73
	230	40	80	3	1.1	213	214	21 700	21 800	14.7	4 400	5 800	**7226C**	44	5.83
140	175	18	36	1.1	0.6	47.5	62.5	4 850	6 350	16.0	5 100	6 800	**7828C**	30	0.973
	190	24	48	1.5	1	83.5	101	8 500	10 300	16.5	4 800	6 400	**7928C**	34	1.94
	210	33	66	2	1	132	145	13 500	14 800	16.0	4 500	6 000	**7028C**	40	3.96
	250	42	84	3	1.1	221	233	22 600	23 800	15.0	4 000	5 300	**7228C**	47	7.3
150	190	20	40	1.1	0.6	60.5	79.5	6 150	8 100	16.1	4 700	6 300	**7830C**	33	1.33
	210	28	56	2	1	108	132	11 000	13 400	16.5	4 500	6 000	**7930C**	38	2.96
	225	35	70	2.1	1.1	151	168	15 400	17 200	16.0	4 200	5 600	**7030C**	42.5	4.82
	270	45	90	3	1.1	253	281	25 800	28 600	14.9	3 700	5 000	**7230C**	50.5	11
160	200	20	40	1.1	0.6	62.0	83.5	6 300	8 500	16.0	4 400	5 900	**7832C**	34	1.41
	220	28	56	2	1	109	136	11 100	13 900	16.5	4 200	5 600	**7932C**	39.5	3.13
	240	38	76	2.1	1.1	171	193	17 400	19 700	16.0	3 900	5 200	**7032C**	46	5.96
170	215	22	44	1.1	0.6	76.0	102	7 750	10 400	16.1	4 100	5 500	**7834C**	37	1.87
	230	28	56	2	1	113	145	11 500	14 800	16.4	3 900	5 300	**7934C**	41	3.29
	260	42	84	2.1	1.1	205	234	20 900	23 900	15.9	3 700	4 900	**7034C**	50	7.96
180	280	46	92	2.1	1.1	241	290	24 500	29 600	15.7	3 400	4 600	**7036C**	54	10.4
190	290	46	92	2.1	1.1	247	305	25 100	31 500	15.9	3 200	4 300	**7038C**	55	10.8
200	310	51	102	2.1	1.1	277	355	28 200	36 000	15.7	3 100	4 100	**7040C**	59.5	14

1) This value was achieved with laminated phenol resin machined cages; in the case of molded resin cages,with oil lubricant, the value will be 75% of this.
2) Minimal allowable dimension for chamfer dimension *r* or r_1.

High Speed Single and Duplex Angular Contact Ball Bearings

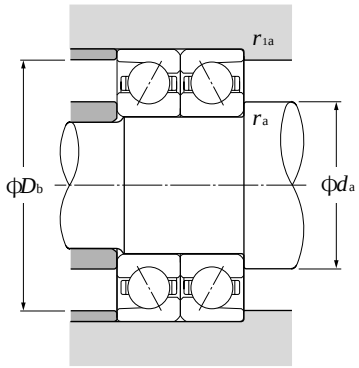

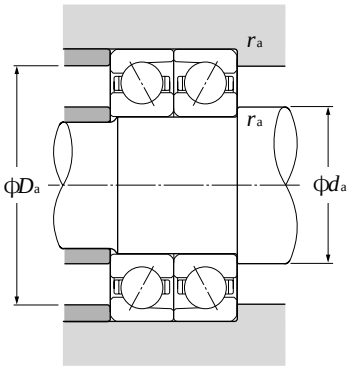

Dynamic equivalent radial load

$P_r = XF_r + YF_a$

$i f_o \cdot F_a / C_{or}$ [3]	e	Single, DT				DB, DF			
		$F_a/F_r \leqq e$		$F_a/F_r > e$		$F_a/F_r \leqq e$		$F_a/F_r > e$	
		X	Y	X	Y	X	Y	X	Y
0.178	0.38				1.47		1.65		2.39
0.357	0.40				1.40		1.57		2.28
0.714	0.43				1.30		1.46		2.11
1.07	0.46				1.23		1.38		2.00
1.43	0.47	1	0	0.44	1.19	1	1.34	0.72	1.93
2.14	0.50				1.12		1.26		1.82
3.57	0.55				1.02		1.14		1.66
5.35	0.56				1.00		1.12		1.63
7.14	0.56				1.00		1.12		1.63

Static equivalent radial load

$P_{or} = X_o F_r + Y_o F_a$

Single, DT		DB, DF	
X_o	Y_o	X_o	Y_o
0.5	0.46	1	0.92

For single and DT arrangement,
When $P_{or} < F_r$ use $P_{or} = F_r$

Basic load ratings dynamic (duplex) C_r kN	Basic load ratings static (duplex) C_{or} kN	Basic load ratings dynamic (duplex) C_r kgf	Basic load ratings static (duplex) C_{or} kgf	Limiting speeds[1] (duplex) grease min^{-1}	Limiting speeds[1] (duplex) oil min^{-1}	Bearing numbers DB	Bearing numbers DF	Bearing numbers DT	Abutment and fillet dimensions d_a min mm	D_a max mm	D_b max mm	r_{as} max mm	r_{1as} max mm
56.0	85.0	5 750	8 700	5 200	6 900	DB	DF	DT	115.5	134.5	135.5	1	0.6
89.0	127	9 050	12 900	4 900	6 600	DB	DF	DT	117	143	145.5	1	0.6
164	203	16 700	20 700	4 600	6 100	DB	DF	DT	120	160	164.5	2	1
286	320	29 200	32 500	4 100	5 500	DB	DF	DT	122	188	193	2	1
405	485	41 000	49 000	3 700	5 000	DB	DF	DT	124	226	233	2.5	1
57.0	89.5	5 800	9 100	4 700	6 300	DB	DF	DT	125.5	144.5	145.5	1	0.6
109	157	11 200	16 000	4 500	6 000	DB	DF	DT	127	158	160.5	1	0.6
168	216	17 100	22 000	4 200	5 600	DB	DF	DT	130	170	174.5	2	1
325	385	33 000	39 000	3 800	5 000	DB	DF	DT	132	203	208	2	1
76.0	119	7 750	12 100	4 400	5 800	DB	DF	DT	137	158	160.5	1	0.60
134	196	13 700	20 000	4 100	5 500	DB	DF	DT	138.5	171.5	174.5	1.5	1
210	274	21 400	28 000	3 800	5 100	DB	DF	DT	140	190	194.5	2	1
345	430	35 500	43 500	3 500	4 600	DB	DF	DT	144	216	223	2.5	1
77.5	125	7 900	12 700	4 000	5 400	DB	DF	DT	147	168	170.5	1	0.6
136	203	13 800	20 700	3 800	5 100	DB	DF	DT	148.5	181.5	184.5	1.5	1
214	290	21 900	29 600	3 600	4 800	DB	DF	DT	150	200	204.5	2	1
360	465	36 500	47 500	3 200	4 200	DB	DF	DT	154	236	243	2.5	1
98.5	159	10 000	16 200	3 700	5 000	DB	DF	DT	157	183	185.5	1	0.6
175	263	17 800	26 800	3 600	4 800	DB	DF	DT	160	200	204.5	2	1
245	335	25 000	34 500	3 300	4 400	DB	DF	DT	162	213	218	2	1
410	560	42 000	57 500	3 000	4 000	DB	DF	DT	164	256	263	2.5	1
100	167	10 200	17 000	3 500	4 700	DB	DF	DT	167	193	195.5	1	0.6
177	272	18 100	27 800	3 300	4 400	DB	DF	DT	170	210	214.5	2	1
278	385	28 300	39 500	3 100	4 100	DB	DF	DT	172	228	233	2	1
123	204	12 600	20 800	3 300	4 400	DB	DF	DT	177	208	210.5	1	0.6
183	290	18 700	29 600	3 100	4 200	DB	DF	DT	180	220	224.5	2	1
330	470	34 000	48 000	2 900	3 900	DB	DF	DT	182	248	253	2	1
390	580	40 000	59 000	2 700	3 600	DB	DF	DT	192	268	273	2	1
400	615	41 000	62 500	2 600	3 400	DB	DF	DT	202	278	283	2	1
450	710	46 000	72 500	2 400	3 200	DB	DF	DT	212	298	303	2	1

3) i is 2 for rear or front combination and 1 for single or parallel combination.
Note: This bearing has a contact angle of 15° and is manufactured with accuracies of JIS Class 5 or higher.

BNT type

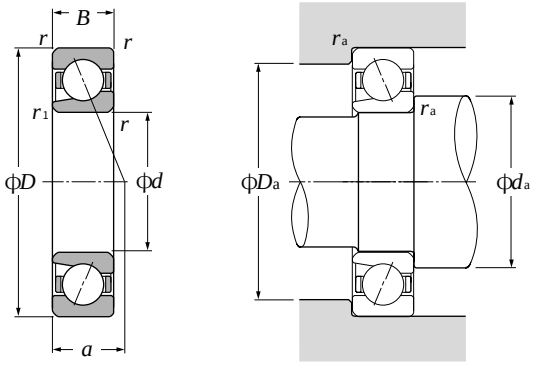

Dynamic equivalent radial load

$P_r = XF_r + YF_a$

$\frac{f_o \cdot F_a}{C_{or}}$	e	$\frac{F_a}{F_r} \leqq e$		$\frac{F_a}{F_r} > e$	
		X	Y	X	Y
0.178	0.35	1	0	0.44	1.57
0.357	0.37				1.53
0.714	0.38				1.46
1.07	0.39				1.42
1.43	0.40				1.38
2.14	0.42				1.33
3.57	0.45				1.25
5.35	0.47				1.18
7.14	0.49				1.13

Static equivalent radial load

$P_{or} = 0.52F_r + 0.54F_a$

When $P_{or} < F_r$ use $P_{or} = F_r$

d 10～45mm

Boundary dimensions mm					Basic load ratings dynamic kN		Basic load ratings static kgf		Factor	Limiting speeds min^{-1}		Bearing numbers	Abutment and fillet dimensions mm			Load center mm	Mass kg
d	D	B	$r_{s\,min}$ [1]	$r_{1s\,min}$ [1]	C_r	C_{or}	C_r	C_{or}	f_o	grease	oil		d_a min	D_a max	r_{as} max	a	(approx.)
10	26	8	0.3	0.15	3.75	1.45	385	148	8.3	48 000	64 000	BNT000	12.5	23.5	0.3	6.5	0.015
	30	9	0.6	0.3	4.15	1.71	420	175	8.7	46 000	61 000	BNT200	14.5	25.5	0.6	7	0.019
12	28	8	0.3	0.15	4.15	1.73	420	176	8.8	43 000	57 000	BNT001	14.5	25.5	0.3	6.5	0.020
	32	10	0.6	0.3	5.40	2.28	550	232	8.5	40 000	54 000	BNT201	16.5	27.5	0.6	8	0.025
15	32	9	0.3	0.15	4.75	2.22	485	226	9.2	38 000	50 000	BNT002	17.5	29.5	0.3	7.5	0.029
	35	11	0.6	0.3	6.85	2.97	700	300	8.5	35 000	47 000	BNT202	19.5	30.5	0.6	9	0.035
17	35	10	0.3	0.15	5.90	2.70	600	275	9.0	34 000	46 000	BNT003	19.5	32.5	0.3	8.5	0.033
	40	12	0.6	0.3	8.55	3.80	870	385	8.5	32 000	42 000	BNT203	21.5	35.5	0.6	10	0.054
20	42	12	0.6	0.3	8.00	3.95	815	405	9.2	30 000	40 000	BNT004	24.5	37.5	0.6	10	0.057
	47	14	1	0.6	11.2	5.35	1 140	545	8.8	28 000	38 000	BNT204	25.5	41.5	1	11.5	0.092
25	47	12	0.6	0.3	8.95	4.85	910	495	9.6	25 000	34 000	BNT005	29.5	42.5	0.6	11	0.067
	52	15	1	0.6	12.7	6.70	1 290	685	9.2	24 000	31 000	BNT205	30.5	46.5	1	12.5	0.127
30	55	13	1	0.6	11.6	6.75	1 180	685	9.8	22 000	29 000	BNT006	35.5	49.5	1	12.5	0.109
	62	16	1	0.6	17.6	9.60	1 800	980	9.2	20 000	27 000	BNT206	35.5	56.5	1	14	0.201
35	62	14	1	0.6	14.6	8.95	1 490	910	9.8	19 000	26 000	BNT007	40.5	56.5	1	13.5	0.146
	72	17	1.1	0.6	23.2	13.1	2 370	1 330	9.1	18 000	24 000	BNT207	42	65	1	15.5	0.294
40	68	15	1	0.6	15.7	10.4	1 600	1 060	10.0	17 000	23 000	BNT008	45.5	62.5	1	14.5	0.182
	80	18	1.1	0.6	27.8	16.5	2 830	1 680	9.3	16 000	21 000	BNT208	47	73	1	17	0.383
45	75	16	1	0.6	18.6	12.6	1 900	1 290	10.1	15 000	21 000	BNT009	50.5	69.5	1	16	0.235
	85	19	1.1	0.6	31.0	18.9	3 200	1 920	9.3	14 000	19 000	BNT209	52	78	1	18	0.437

1) Minimal allowable dimension for chamfer dimension r or r_1.

Note: This bearing is manufactured with accuracies of JIS Class 5 or higher.

HSB type

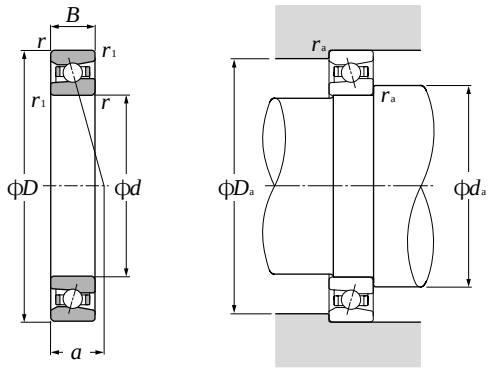

Dynamic equivalent radial load

$P_r = XF_r + YF_a$

$\frac{f_o \cdot F_a}{C_{or}}$	e	$\frac{F_a}{F_r} \leqq e$		$\frac{F_a}{F_r} > e$	
		X	Y	X	Y
0.178	0.35				1.57
0.357	0.37				1.53
0.714	0.38				1.46
1.07	0.39				1.42
1.43	0.40	1	0	0.44	1.38
2.14	0.42				1.33
3.57	0.45				1.25
5.35	0.47				1.18
7.14	0.49				1.13

Static equivalent radial load

$P_{or} = 0.52F_r + 0.54F_a$

When $P_{or} < F_r$ use $P_{or} = F_r$

d 50～110mm

Boundary dimensions mm					Basic load ratings dynamic kN		Basic load ratings static kgf		Factor	Limiting speeds min^{-1}		Bearing numbers	Abutment and fillet dimensions mm			Load center mm	Mass kg
d	D	B	$r_{s\,min}$ 1)	$r_{1s\,min}$ 1)	C_r	C_{or}	C_r	C_{or}	f_o	grease	oil		d_a min	D_a max	r_{as} max	a	(approx.)
50	72	12	0.6	0.3	10.6	7.30	1 080	745	11.1	15 000	20 000	**HSB910C**	54.5	67.5	0.6	14	0.141
	80	16	1	0.6	20.8	11.4	2 120	1 160	10.4	14 000	19 000	**HSB010C**	55.5	74.5	1	16.5	0.256
55	80	13	1	0.6	13.5	9.20	1 380	940	11.0	14 000	18 000	**HSB911C**	60.5	74.5	1	15.5	0.192
	90	18	1.1	0.6	22.6	13.6	2 300	1 380	10.6	13 000	17 000	**HSB011C**	62	83	1	18.5	0.397
60	85	13	1	0.6	13.9	9.95	1 420	1 010	11.1	13 000	17 000	**HSB912C**	65.5	79.5	1	16	0.206
	95	18	1.1	0.6	23.7	15.0	2 410	1 530	10.7	12 000	16 000	**HSB012C**	67	88	1	19.5	0.425
65	90	13	1	0.6	14.3	10.7	1 460	1 090	11.2	12 000	16 000	**HSB913C**	70.5	84.5	1	17	0.22
	100	18	1.1	0.6	24	15.8	2 450	1 610	10.8	11 000	15 000	**HSB013C**	72	93	1	20	0.452
70	100	16	1	0.6	18	13.5	1 830	1 370	11.1	11 000	15 000	**HSB914C**	75.5	94.5	1	19.5	0.362
	110	20	1.1	0.6	29.4	19.9	3 000	2 030	10.8	10 000	14 000	**HSB014C**	77	103	1	22	0.64
75	105	16	1	0.6	18.5	14.4	1 880	1 470	11.2	10 000	14 000	**HSB915C**	80.5	99.5	1	20	0.383
	115	20	1.1	0.6	31.5	22.4	3 200	2 290	10.9	9 500	13 000	**HSB015C**	82	108	1	22.5	0.68
80	110	16	1	0.6	18.9	15.4	1 930	1 570	11.3	9 600	13 000	**HSB916C**	85.5	104.5	1	20.5	0.405
	125	22	1.1	0.6	36	25.7	3 650	2 620	10.9	8 900	12 000	**HSB016C**	87	118	1	24.5	0.915
85	120	18	1.1	0.6	22.7	18.3	2 320	1 860	11.2	9 000	12 000	**HSB917C**	92	113	1	22.5	0.578
	130	22	1.1	0.6	36.5	26.8	3 700	2 740	10.9	8 400	11 000	**HSB017C**	92	123	1	25.5	0.959
90	125	18	1.1	0.6	23.4	19.5	2 380	1 980	11.3	8 500	11 000	**HSB918C**	97	118	1	23.5	0.607
	140	24	1.5	1	42	31.5	4 300	3 200	10.9	7 900	11 000	**HSB018C**	98.5	131.5	1.5	27.5	1.25
95	130	18	1.1	0.6	24	20.6	2 440	2 110	11.3	8 100	11 000	**HSB919C**	102	123	1	24	0.636
	145	24	1.5	1	42.5	32.5	4 350	3 350	11.0	7 500	10 000	**HSB019C**	103.5	136.5	1.5	28	1.3
100	140	20	1.1	0.6	33.5	28	3 450	2 850	11.2	7 600	10 000	**HSB920C**	107	133	1	26	0.856
	150	24	1.5	1	44	35	4 500	3 600	11.0	7 100	9 500	**HSB020C**	108.5	141.5	1.5	28.5	1.36
105	145	20	1.1	0.6	34.5	29.7	3 550	3 050	11.2	7 300	9 700	**HSB921C**	112	138	1	26.5	0.893
	160	26	2	1	50.5	40.5	5 150	4 150	11.0	6 700	9 000	**HSB021C**	115	150	2	31	1.73
110	150	20	1.1	0.6	35	30.5	3 550	3 150	11.3	6 900	9 200	**HSB922C**	117	143	1	27.5	0.928
	170	28	2	1	62.5	49.5	6 400	5 000	10.9	6 400	8 600	**HSB022C**	120	160	2	33	2.13

1) Minimal allowable dimension for chamfer dimension r or r_1.

Note: This bearing is manufactured with accuracies of JIS Class 5 or higher.

HSB type

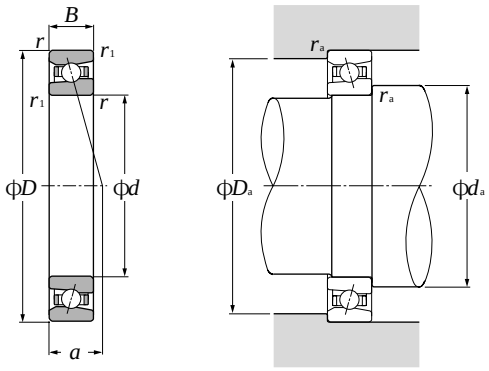

Dynamic equivalent radial load

$P_r = XF_r + YF_a$

$\frac{f_o \cdot F_a}{C_{or}}$	e	$\frac{F_a}{F_r} \leqq e$		$\frac{F_a}{F_r} > e$	
		X	Y	X	Y
0.178	0.35	1	0	0.44	1.57
0.357	0.37				1.53
0.714	0.38				1.46
1.07	0.39				1.42
1.43	0.40				1.38
2.14	0.42				1.33
3.57	0.45				1.25
5.35	0.47				1.18
7.14	0.49				1.13

Static equivalent radial load

$P_{or} = 0.52F_r + 0.54F_a$

When $P_{or} < F_r$ use $P_{or} = F_r$

d 120～170mm

Boundary dimensions mm					Basic load ratings dynamic kN		Basic load ratings static kgf		Factor	Limiting speeds min^{-1}		Bearing numbers	Abutment and fillet dimensions mm			Load center mm	Mass kg
d	D	B	$r_{s\,min}$ 1)	$r_{1s\,min}$ 1)	C_r	C_{or}	C_r	C_{or}	f_o	grease	oil		d_a min	D_a max	r_{as} max	a	(approx.)
120	165	22	1.1	0.60	41	36.5	4 150	3 750	11.3	6 300	8 500	HSB924C	127	158	1	30	1.27
	180	28	2	1	63	51.5	6 450	5 250	11.0	5 900	7 900	HSB024C	130	170	2	34	2.28
130	180	24	1.5	1	48.5	45	4 950	4 600	11.3	5 800	7 800	HSB926C	138.5	171.5	1.5	33	1.69
	200	33	2	1	90.5	71	9 250	7 250	10.8	5 400	7 200	HSB026C	140	190	2	38.5	3.40
140	190	24	1.5	1	48.5	46.5	4 950	4 750	11.3	5 400	7 100	HSB928C	148.5	181.5	1.5	34	1.8
	210	33	2	1	93.5	77	9 550	7 850	10.9	5 000	6 700	HSB028C	150	200	2	40	3.68
150	210	28	2	1	68	63	6 950	6 400	11.2	5 000	6 700	HSB930C	160	200	2	38	2.74
	225	35	2.1	1.1	96.5	83	9 850	8 450	11.0	4 600	6 200	HSB030C	162	213	2	42.5	4.46
160	220	28	2	1	69.5	66.5	7 100	6 800	11.3	4 600	6 200	HSB932C	170	210	2	39.5	2.89
	240	38	2.1	1.1	113	97	11 500	9 850	11.0	4 300	5 800	HSB032C	172	228	2	46	5.46
170	230	28	2	1	71	70.5	7 250	7 200	11.3	4 400	5 800	HSB934C	180	220	2	41	3.04
	260	42	2.1	1.1	129	111	13 200	11 300	10.9	4 100	5 400	HSB034C	182	248	2	50	7.37

1) Minimal allowable dimension for chamfer dimension r or r_1.

Note: This bearing is manufactured with accuracies of JIS Class 5 or higher.

5S-BNT type

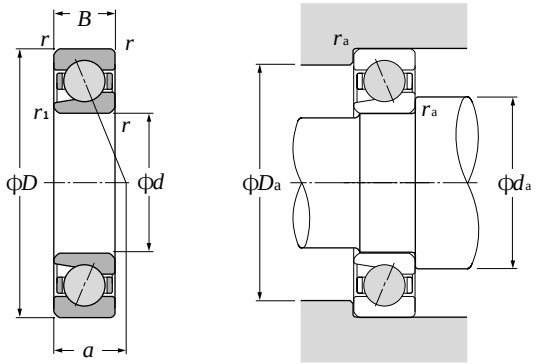

d 10～45mm

Boundary dimensions mm					Basic dynamic load ratings[2] (approx.) kN	kgf	Bearing numbers	Abutment and fillet dimensions mm			Load center mm	Mass kg
d	D	B	$r_{s\,min}$[1]	$r_{ls\,min}$[1]	C_r	C_r		d_a min	D_a max	r_{as} max	a	(approx.)
10	26	8	0.3	0.15	3.75	385	5S-BNT000	12.5	23.5	0.3	6.5	0.013
	30	9	0.6	0.3	4.95	500	5S-BNT200	14.5	25.5	0.6	7	0.016
12	28	8	0.3	0.15	4.15	420	5S-BNT001	14.5	25.5	0.3	6.5	0.018
	32	10	0.6	0.3	5.40	550	5S-BNT201	16.5	27.5	0.6	8	0.021
15	32	9	0.3	0.15	4.75	485	5S-BNT002	17.5	29.5	0.3	7.5	0.026
	35	11	0.6	0.3	6.85	700	5S-BNT202	19.5	30.5	0.6	9	0.03
17	35	10	0.3	0.15	5.90	600	5S-BNT003	19.5	32.5	0.3	8.5	0.029
	40	12	0.6	0.3	8.55	870	5S-BNT203	21.5	35.5	0.6	10	0.046
20	42	12	0.6	0.3	8.00	815	5S-BNT004	24.5	37.5	0.6	10	0.05
	47	14	1	0.6	11.2	1 140	5S-BNT204	25.5	41.5	1	11.5	0.08
25	47	12	0.6	0.3	8.95	910	5S-BNT005	29.5	42.5	0.6	11	0.059
	52	15	1	0.6	12.7	1 290	5S-BNT205	30.5	46.5	1	12.5	0.113
30	55	13	1	0.6	11.6	1 180	5S-BNT006	35.5	49.5	1	12.5	0.097
	62	16	1	0.6	17.6	1 800	5S-BNT206	35.5	56.5	1	14	0.113
35	62	14	1	0.6	14.6	1 490	5S-BNT007	40.5	56.5	1	13.5	0.128
	72	17	1.1	0.6	23.2	2 370	5S-BNT207	42	65	1	15.5	0.255
40	68	15	1	0.6	15.7	1 600	5S-BNT008	45.5	62.5	1	14.5	0.162
	80	18	1.1	0.6	27.8	2 830	5S-BNT208	47	73	1	17	0.331
45	75	16	1	0.6	18.6	1 900	5S-BNT009	50.5	69.5	1	16	0.208
	85	19	1.1	0.6	31.0	3 200	5S-BNT209	52	78	1	18	0.374

1) Minimal allowable dimension for chamfer dimension r or r_1.
2) Basic rated dynamic load for bearings with ceramic balls is not stipulated by JIS. In NTN wear life testing, these bearings displayed the same wear life as steel angular contact ball bearings; therefore, the values for steel bearings have been given as reference.

5S-HSB type

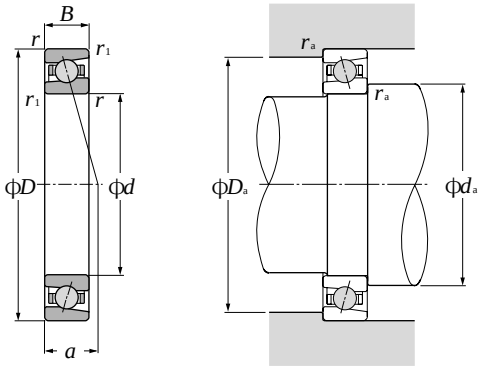

d 50～120mm

Boundary dimensions mm					Basic dynamic load ratings[2] (approx.) kN	kgf	Bearing numbers	Abutment and fillet dimensions mm			Load center mm	Mass kg
d	D	B	$r_{s\,min}$[1]	$r_{ls\,min}$[1]	C_r	C_r		d_a min	D_a max	r_{as} max	a	(approx.)
50	72	12	0.6	0.3	10.6	1 080	5S-HSB910C	54.5	67.5	0.6	14	0.134
	80	16	1	0.6	20.8	2 120	5S-HSB010C	55.5	74.5	1	16.5	0.234
55	80	13	1	0.6	13.5	1 380	5S-HSB911C	60.5	74.5	1	15.5	0.18
	90	18	1.1	0.6	22.6	2 300	5S-HSB011C	62	83	1	18.5	0.372
60	85	13	1	0.6	13.9	1 420	5S-HSB912C	65.5	79.5	1	16	0.194
	95	18	1.1	0.6	23.7	2 410	5S-HSB012C	67	88	1	19.5	0.398
65	90	13	1	0.6	14.3	1 460	5S-HSB913C	70.5	84.5	1	17	0.207
	100	18	1.1	0.6	24.0	2 450	5S-HSB103C	72	93	1	20	0.423
70	100	16	1	0.6	18.0	1 830	5S-HSB914C	75.5	94.5	1	19.5	0.343
	110	20	1.1	0.6	29.4	3 000	5S-HSB014C	77	103	1	22	0.601
75	105	16	1	0.6	18.5	1 880	5S-HSB915C	80.5	99.5	1	20	0.363
	115	20	1.1	0.6	31.5	3 200	5S-HSB015C	82	108	1	22.5	0.636
80	110	16	1	0.6	18.9	1 930	5S-HSB916C	85.5	104.5	1	20.5	0.384
	125	22	1.1	0.6	36.0	3 650	5S-HSB016C	87	118	1	24.5	0.86
85	120	18	1.1	0.6	22.7	2 320	5S-HSB917C	92	113	1	22.5	0.55
	130	22	1.1	0.6	36.5	3 700	5S-HSB017C	92	123	1	25.5	0.901
90	125	18	1.1	0.6	23.4	2 380	5S-HSB918C	97	118	1	23.5	0.577
	140	24	1.5	1	42.0	4 300	5S-HSB018C	98.5	131.5	1.5	27.5	1.18
95	130	18	1.1	0.6	24.0	2 440	5S-HSB919C	102	123	1	24	0.604
	145	24	1.5	1	42.5	4 350	5S-HSB019C	103.5	136.5	1.5	28	1.23
100	140	20	1.1	0.6	33.5	3 450	5S-HSB920C	107	133	1	26	0.837
	150	24	1.5	1	44.0	4 500	5S-HSB020C	108.5	141.5	1.5	28.5	1.28
105	145	20	1.1	0.6	34.5	3 550	5S-HSB921C	112	138	1	26.5	0.837
	160	26	2	1	50.5	5 150	5S-HSB021C	115	150	2	31	1.63
110	150	20	1.1	0.6	35.0	3 550	5S-HSB922C	117	143	1	27.5	0.87
	170	28	2	1	62.5	6 400	5S-HSB022C	120	160	2	33	1.99
120	165	22	1.1	0.6	41.0	4 150	5S-HSB924C	127	158	1	30	1.2
	180	28	2	1	63.0	6 450	5S-HSB024C	130	170	2	34	2.13

1) Minimal allowable dimension for chamfer dimension r or r_1. 2) Basic rated dynamic load for bearings with ceramic balls is not stipulated by JIS. In NTN fatigue life tests, these bearings achieved the same fatigue life as steel angular contact ball bearings; therefore, the values for steel bearings have been given as reference.
Note: For bearings with a bore diameter larger than 120mm, consult NTN Engineering.

QJ type

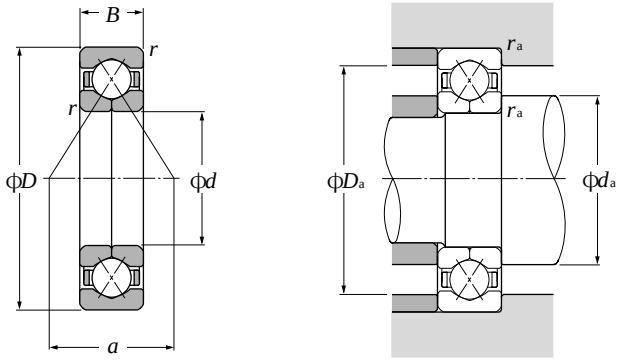

Dynamic equivalent axial load
$P_a = F_a$

Static equivalent axial load
$P_{oa} = F_a$

d 30 ～ 90mm

Boundary dimensions mm				Basic load ratings dynamic kN		static kN		Limiting speeds min^{-1}		Bearing numbers	Abutment and fillet dimensions mm			Load center mm	Mass kg
d	D	B	$r_{s\,min}$ [1]	C_a	C_{oa}	C_a	C_{oa}	grease	oil		d_a min	D_a max	r_{as} max	a	(approx.)
30	72	19	1.1	39.5	57.5	4 050	5 850	8 000	11 000	**QJ306**	37	65	1	30	0.42
35	80	21	1.5	49.5	73.0	5 050	7 450	7 000	9 300	**QJ307**	43.5	71.5	1.5	33	0.57
40	80	18	1.1	44.0	70.5	4 500	7 200	6 900	9 200	**QJ208**	47	73	1	34.5	0.45
	90	23	1.5	60.5	91.5	6 200	9 350	6 200	8 200	**QJ308**	48.5	81.5	1.5	37.5	0.78
45	85	19	1.1	49.5	81.0	5 050	8 250	6 200	8 200	**QJ209**	52	78	1	37.5	0.52
	100	25	1.5	79.0	121	8 050	12 300	5 500	7 400	**QJ309**	53.5	91.5	1.5	42	1.05
50	90	20	1.1	52.0	89.0	5 300	9 050	5 600	7 500	**QJ210**	57	83	1	40.5	0.603
	110	27	2	92.0	145	9 400	14 700	5 000	6 700	**QJ310**	60	100	2	46	1.38
55	100	21	1.5	64.0	112	6 550	11 400	5 100	6 800	**QJ211**	63.5	91.5	1.5	44.5	0.78
	120	29	2	106	170	10 900	17 400	4 600	6 100	**QJ311**	65	110	2	50.5	1.76
60	110	22	1.5	77.5	138	7 900	14 000	4 700	6 300	**QJ212**	68.5	101.5	1.5	49	0.98
	130	31	2.1	122	198	12 400	20 200	4 200	5 700	**QJ312**	72	118	2	55	2.18
65	120	23	1.5	84.5	153	8 600	15 600	4 400	5 800	**QJ213**	73.5	111.5	1.5	53.5	1.24
	140	33	2.1	138	228	14 100	23 200	3 900	5 200	**QJ313**	77	128	2	59	2.7
70	125	24	1.5	92.0	168	9 350	17 200	4 000	5 400	**QJ214**	78.5	116.5	1.5	56.5	1.36
	150	35	2.1	155	260	15 800	26 500	3 600	4 800	**QJ314**	82	138	2	63.5	3.27
75	130	25	1.5	96.0	183	9 750	18 600	3 800	5 000	**QJ215**	83.5	121.5	1.5	59	1.53
	160	37	2.1	169	294	17 200	30 000	3 400	4 500	**QJ315**	87	148	2	68	3.9
80	140	26	2	112	217	11 400	22 100	3 500	4 700	**QJ216**	90	130	2	63.5	1.83
	170	39	2.1	183	330	18 600	33 500	3 200	4 200	**QJ316**	92	158	2	72	4.64
85	150	28	2	126	252	12 800	25 700	3 300	4 400	**QJ217**	95	140	2	68	2.3
	180	41	3	197	370	20 100	37 500	3 000	4 000	**QJ317**	99	166	2.5	76.5	5.43
90	160	30	2	148	293	15 100	29 900	3 100	4 200	**QJ218**	100	150	2	72	2.76
	190	43	3	212	410	21 600	41 500	2 800	3 800	**QJ318**	104	176	2.5	81	6.31

1) Smallest allowable dimension for chamfer dimension r.

Note: 1. These bearings are also manufactured with a slot in the chamfer section of the outer ring to stop whirling.
2. This bearing is widely used in applications where the only type of load is axial. When considering it for use where radial loads are applied, consult NTN Engineering.

QJ type

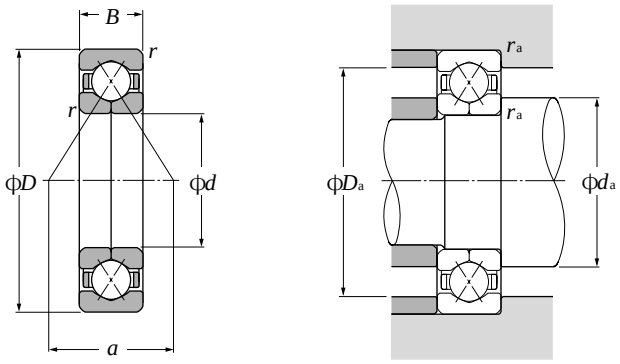

Dynamic equivalent axial load
$P_a = F_a$

Static equivalent axial load
$P_{oa} = F_a$

d 95～120mm

Boundary dimensions mm				Basic load ratings dynamic kN		static kN		Limiting speeds min^{-1}		Bearing numbers	Abutment and fillet dimensions mm			Load center mm	Mass kg
d	D	B	$r_{s\,min}$ [1]	C_a	C_{oa}	C_a	C_{oa}	grease	oil		d_a min	D_a max	r_{as} max	a	(approx.)
95	170	32	2.1	168	335	17 200	34 000	3 000	3 900	QJ219	107	158	2	76.5	3.35
	200	45	3	227	450	23 100	46 000	2 700	3 500	QJ319	109	186	2.5	85	7.41
100	180	34	2.1	181	355	18 400	36 000	2 800	3 700	QJ220	112	168	2	81	4.02
	215	47	3	273	585	27 800	59 500	2 500	3 400	QJ320	114	201	2.5	91	9.14
105	190	36	2.1	197	400	20 100	41 000	2 700	3 600	QJ221	117	178	2	85	4.75
	225	49	3	273	585	27 900	59 500	2 400	3 200	QJ321	119	211	2.5	95.5	10.4
110	200	38	2.1	213	450	21 700	45 500	2 500	3 400	QJ222	122	188	2	89.5	5.62
	240	50	3	305	680	31 000	69 500	2 300	3 100	QJ322	124	226	2.5	101	12
120	215	40	2.1	240	540	24 500	55 000	2 300	3 100	QJ224	132	203	2	96.5	6.75
	260	55	3	325	765	33 000	78 000	2 100	2 800	QJ324	134	246	2.5	110	15.9

1) Smallest allowable dimension for chamfer dimension r.

Note: 1. These bearings are also manufactured with a slot in the chamfer section of the outer ring to stop whirling.
2. This bearing is widely used in applications where the only type of load is axial. When considering it for use where radial loads are applied, consult NTN Engineering.

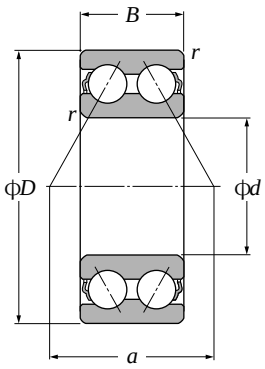

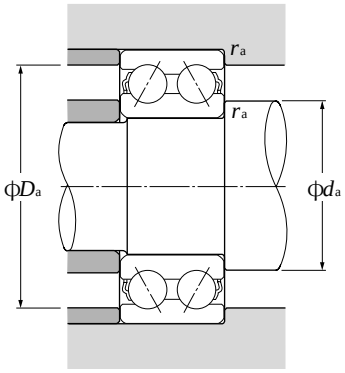

Dynamic equivalent radial load

$P_r = XF_r + YF_a$

e	$\frac{F_a}{F_r} \leqq e$		$\frac{F_a}{F_r} > e$	
	X	Y	X	Y
0.68	1	0.92	0.67	1.41

Static equivalent radial load

$P_{or} = F_r + 0.76F_a$

d 10～65mm

Boundary dimensions mm				Basic load ratings dynamic kN	static kN	dynamic kgf	static kgf	Limiting speeds min^{-1}		Bearing numbers	Abutment and fillet dimensions mm			Load center mm	Mass kg
d	D	B	$r_{s\,min}$ [1]	C_r	C_{or}	C_r	C_{or}	grease	oil		d_a min	D_a max	r_{as} max	a	(approx.)
10	30	14.3	0.6	7.15	3.90	730	400	17 000	22 000	**5200S**	15	25	0.6	14.5	0.05
12	32	15.9	0.6	10.5	5.80	1 070	590	15 000	20 000	**5201S**	17	27	0.6	16.7	0.06
15	35	15.9	0.6	11.7	7.05	1 190	715	13 000	17 000	**5202S**	20	30	0.6	18.3	0.07
	42	19	1	17.6	10.2	1 800	1 040	11 000	15 000	**5302S**	21	36	1	22.0	0.11
17	40	17.5	0.6	14.6	9.05	1 490	920	11 000	15 000	**5203S**	22	35	0.6	20.8	0.09
	47	22.2	1	21.0	12.6	2 140	1 280	10 000	13 000	**5303S**	23	41	1	25.0	0.14
20	47	20.6	1	19.6	12.4	2 000	1 270	10 000	13 000	**5204S**	26	41	1	24.3	0.12
	52	22.2	1.1	24.6	15.0	2 510	1 530	9 000	12 000	**5304S**	27	45	1	26.7	0.23
25	52	20.6	1	21.3	14.7	2 170	1 500	8 500	11 000	**5205S**	31	46	1	26.8	0.19
	62	25.4	1.1	32.5	20.7	3 350	2 110	7 500	10 000	**5305S**	32	55	1	31.8	0.34
30	62	23.8	1	29.6	21.1	3 000	2 150	7 100	9 500	**5206S**	36	56	1	31.6	0.29
	72	30.2	1.1	40.5	28.1	4 150	2 870	6 300	8 500	**5306S**	37	65	1	36.5	0.51
35	72	27	1.1	39.0	28.7	4 000	2 920	6 300	8 000	**5207S**	42	65	1	36.6	0.43
	80	34.9	1.5	51.0	36.0	5 200	3 700	5 600	7 500	**5307S**	44	71	1.5	41.6	0.79
40	80	30.2	1.1	44.0	33.5	4 500	3 400	5 600	7 100	**5208S**	47	73	1	41.5	0.57
	90	36.5	1.5	56.5	41.0	5 800	4 200	5 300	6 700	**5308S**	49	81	1.5	45.5	1.05
45	85	30.2	1.1	49.5	38.0	5 050	3 900	5 000	6 700	**5209S**	52	78	1	43.4	0.62
	100	39.7	1.5	68.5	51.0	7 000	5 200	4 500	6 000	**5309S**	54	91	1.5	50.6	1.40
50	90	30.2	1.1	53.0	43.5	5 400	4 400	4 800	6 000	**5210S**	57	83	1	45.9	0.67
	110	44.4	2	81.5	61.5	8 300	6 250	4 300	5 600	**5310S**	60	100	2	55.6	1.95
55	100	33.3	1.5	56.0	49.0	5 700	5 000	4 300	5 600	**5211S**	64	91	1.5	50.1	0.96
	120	49.2	2	95.0	73.0	9 700	7 450	3 800	5 000	**5311S**	65	110	2	60.6	2.30
60	110	36.5	1.5	69.0	62.0	7 150	6 300	3 800	5 000	**5212S**	69	101	1.5	56.5	1.35
	130	54	2.1	125	98.5	12 800	10 000	3 400	4 500	**5312S**	72	118	2	69.2	3.15
65	120	38.1	1.5	76.5	69.0	7 800	7 050	3 600	4 500	**5213S**	74	111	1.5	59.7	1.65
	140	58.7	2.1	142	113	14 500	11 500	3 200	4 300	**5313S**	77	128	2	72.8	3.85

1) Smallest allowable dimension for chamfer dimension r.

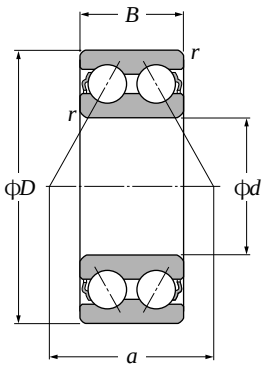

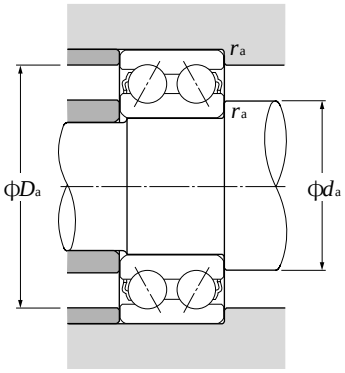

Dynamic equivalent radial load

$P_r = XF_r + YF_a$

e	$\frac{F_a}{F_r} \leqq e$		$\frac{F_a}{F_r} > e$	
	X	Y	X	Y
0.68	1	0.92	0.67	1.41

Static equivalent radial load

$P_{or} = F_r + 0.76F_a$

d 70～85mm

Boundary dimensions mm				Basic load ratings dynamic kN	static kN	dynamic kgf	static kgf	Limiting speeds min^{-1}		Bearing numbers	Abutment and fillet dimensions mm			Load center mm	Mass kg
d	D	B	$r_{s\,min}$[1]	C_r	C_{or}	C_r	C_{or}	grease	oil		d_a min	D_a max	r_{as} max	a	(approx.)
70	125	39.7	1.5	94.0	82.0	9 600	8 400	3 400	4 500	**5214S**	79	116	1.5	63.8	1.80
	150	63.5	2.1	159	128	16 200	13 100	3 000	3 800	**5314S**	82	138	2	78.3	4.90
75	130	41.3	1.5	93.5	83.0	9 550	8 500	3 200	4 300	**5215S**	84	121	1.5	66.1	1.90
80	140	44.4	2	99.0	93.0	10 100	9 500	3 000	3 800	**5216S**	90	130	2	69.6	2.50
85	150	49.2	2	116	110	11 800	11 200	2 800	3 600	**5217S**	95	140	2	75.3	3.40

1）Smallest allowable dimension for chamfer dimension r.

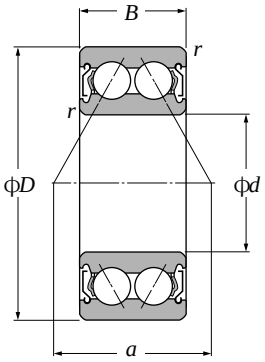

Shielded type (ZZ)

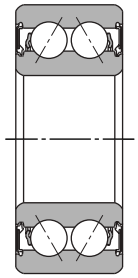

Non-contact sealed type (LLM)

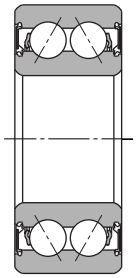

Contact sealed type (LLD)

d 10～40mm

Boundary dimensions mm				Basic load ratings dynamic kN		static kN		Limiting speeds min^{-1} grease		oil	Bearing numbers[2]		
d	*D*	*B*	$r_{s\,min}$[1]	C_r	C_{or}	C_r	C_{or}	ZZ,LLM	LLD	Z,LM	sealed	non-contact type	contact type
10	30	14.3	0.6	7.15	3.90	730	400	17 000	15 000	22 000	**5200SCZZ**	**LLM**	**LLD**
12	32	15.9	0.6	8.50	5.30	865	540	15 000	12 000	20 000	**5201SCZZ**	**LLM**	**LLD**
15	35	15.9	0.6	8.50	5.30	865	540	13 000	12 000	17 000	**5202SCZZ**	**LLM**	**LLD**
17	40	17.5	0.6	12.7	8.30	1 290	850	11 000	10 000	15 000	**5203SCZZ**	**LLM**	**LLD**
	47	22.2	1	19.6	12.4	2 000	1 270	10 000	9 500	13 000	**5303SCZZ**	**LLM**	**LLD**
20	47	20.6	1	15.9	10.7	1 620	1 090	10 000	9 000	13 000	**5204SCZZ**	**LLM**	**LLD**
25	52	20.6	1	16.9	12.3	1 730	1 260	8 500	7 500	11 000	**5205SCZZ**[3]	**LLM**	**LLD**
	62	25.4	1.1	25.2	18.2	2 570	1 850	7 500	6 300	10 000	**5305SCZZ**	**LLM**	**LLD**
30	62	23.8	1	25.2	18.2	2 570	1 850	7 100	6 300	9 500	**5206SCZZ**	**LLM**	**LLD**
	72	30.2	1.1	39.0	28.7	4 000	2 920	6 300	5 300	8 500	**5306SCZZ**	**LLM**	**LLD**
35	72	27.0	1.1	34.0	25.3	3 500	2 580	6 300	5 300	8 500	**5207SCZZ**	**LLM**	**LLD**
	80	34.9	1.5	44.0	33.5	4 500	3 400	5 600	4 800	7 500	**5307SCZZ**	**LLM**	**LLD**
40	80	30.2	1.1	36.5	29.0	3 700	2 960	5 600	4 800	7 100	**5208SCZZ**[3]	**LLM**	**LLD**
	90	36.5	1.5	49.5	38.0	5 050	3 900	5 300	4 500	6 700	**5308SCZZ**	**LLM**	**LLD**

1) Smallest allowable dimension for chamfer dimension *r*.
2) This bearing number is for double sealed and double shielded type bearings, but single sealed and single shielded type are also available.
3) Resin formed cage is standard for 5205SC and 5208SC.

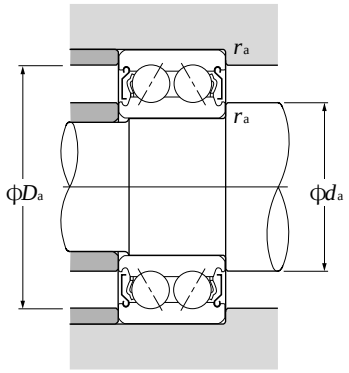

Dynamic equivalent radial load

$P_r = XF_r + YF_a$

e	$\frac{F_a}{F_r} \leqq e$		$\frac{F_a}{F_r} > e$	
	X	Y	X	Y
0.68	1	0.92	0.67	1.41

Static equivalent radial load

$P_{or} = F_r + 0.76F_a$

Abutment and fillet dimensions mm				Load center mm
d_a		D_a	r_{as}	
min	max	max	max	a
14	15.5	26	0.6	14.5
16	19.0	28	0.6	16.3
19	19.0	31	0.6	16.3
21	23.5	36	0.6	20.1
23	25.5	41	1	24.3
26	26.5	41	1	23.0
31	32.0	46	1	25.4
32	38.5	55	1	30.9
36	38.5	56	1	30.9
37	44.5	65	1	36.6
42	45.0	65	1	36.3
44	50.5	71	1.5	41.5
47	50.5	73	1	39.4
49	53.0	81	1.5	43.0

NTN
JAPAN SH

1. Design features and characteristics

The outer ring raceway of self-aligning ball bearings forms a spherical surface whose center is common to the bearing center. The inner ring of the bearing has two raceways. The balls, cage, and inner ring of these bearings are capable of a shifting in order to compensate for a certain degree of misalignment with the outer rings. As a result, the bearing is able to align itself and compensate for shaft / housing finishing unevenness, bearing fitting error, and other sources of misalignment as shown in **Diagram 1**.

However, since axial load capacity is limited, self-aligning ball bearings are not suitable for applications with heavy axial loads.

Furthermore, if an adapter is used on the tapered bore of the inner diameter, installation and disassembly are much simpler and for this reason adapters are often used on equipment with drive shafts.

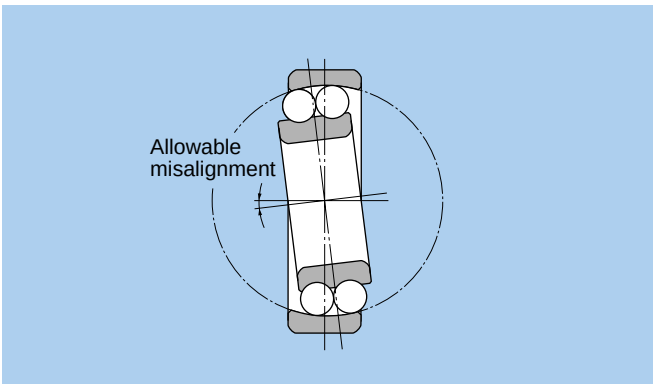

Diagram 1.

2. Standard cage types

All bearing series are equipped with a pressed cage, except 2322S, which is equipped with a machined cage.

3. Ball protrusion

Bearings with part numbers listed in **Diagram 2** below have balls which protrude slightly from the bearing face.

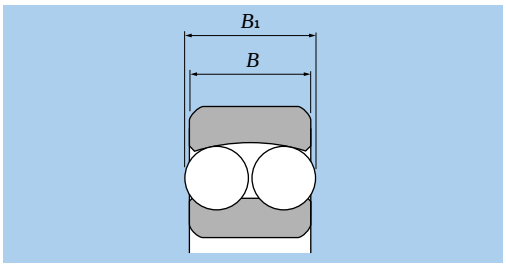

Diagram 2.

their degree of protrusion is listed below

Units mm

Bearing number	Width dimension B	Total width dimension B_1
2222S (K)	53	54
2316S (K)	58	59
2319S (K)	67	68
2320S (K)	73	74
2321S	77	78
2322S (K)	80	81
1318S (K)	43	46
1319S (K)	45	49
1320S (K)	47	53
1321S	49	55
1322S (K)	50	56

4. Allowable misalignment angle

Listed below are the allowable misalignment angles for bearings with self-aligning characteristics when placed under normal load conditions. This degree of allowable misalignment may be limited by the design of structures around the bearing.

Allowable misalignment under normal loads (loads equivalent to 0.09 C_r): 0.07 rad (4°)

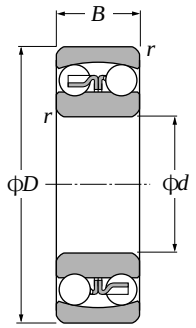

Cylindrical bore

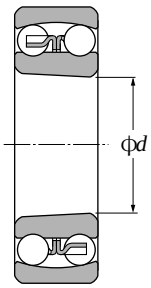

Tapered bore

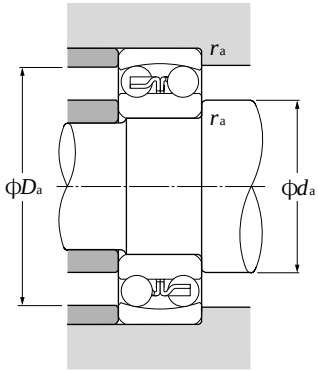

d 10～35mm

Boundary dimensions mm				Basic load ratings dynamic kN		Basic load ratings static kgf		Limiting speeds min-1		Bearing numbers		Abutment and fillet dimensions mm		
d	D	B	$r_{s\,min}$ 1)	C_r	C_{or}	C_r	C_{or}	grease	oil	cylindrical bore	tapered 2) bore	d_a min	D_a max	r_{as} max
10	30	9	0.6	5.55	1.19	570	121	22 000	28 000	**1200S**	—	14.0	26.0	0.6
	30	14	0.6	7.45	1.59	760	162	24 000	28 000	**2200S**	—	14.0	26.0	0.6
	35	11	0.6	7.35	1.62	750	165	20 000	24 000	**1300S**	—	14.0	31.0	0.6
	35	17	0.6	9.20	2.01	935	205	18 000	22 000	**2300S**	—	14.0	31.0	0.6
12	32	10	0.6	5.70	1.27	580	130	22 000	26 000	**1201S**	—	16.0	28.0	0.6
	32	14	0.6	7.75	1.73	790	177	22 000	26 000	**2201S**	—	16.0	28.0	0.6
	37	12	1	9.65	2.16	985	221	18 000	22 000	**1301S**	—	17.0	32.0	1
	37	17	1	12.1	2.73	1 240	278	17 000	22 000	**2301S**	—	17.0	32.0	1
15	35	11	0.6	7.60	1.75	775	179	18 000	22 000	**1202S**	—	19.0	31.0	0.6
	35	14	0.6	7.80	1.85	795	188	18 000	22 000	**2202S**	—	19.0	31.0	0.6
	42	13	1	9.70	2.29	990	234	16 000	20 000	**1302S**	—	20.0	37.0	1
	42	17	1	12.3	2.91	1 250	296	14 000	18 000	**2302S**	—	20.0	37.0	1
17	40	12	0.6	8.00	2.01	815	205	16 000	20 000	**1203S**	—	21.0	36.0	0.6
	40	16	0.6	9.95	2.42	1 010	247	16 000	20 000	**2203S**	—	21.0	36.0	0.6
	47	14	1	12.7	3.20	1 300	325	14 000	17 000	**1303S**	—	22.0	42.0	1
	47	19	1	14.7	3.55	1 500	365	13 000	16 000	**2303S**	—	22.0	42.0	1
20	47	14	1	10.0	2.61	1 020	266	14 000	17 000	**1204S**	**1204SK**	25.0	42.0	1
	47	18	1	12.8	3.30	1 310	340	14 000	17 000	**2204S**	**2204SK**	25.0	42.0	1
	52	15	1.1	12.6	3.35	1 280	340	12 000	15 000	**1304S**	**1304SK**	26.5	45.5	1
	52	21	1.1	18.5	4.70	1 880	480	11 000	14 000	**2304S**	**2304SK**	26.5	45.5	1
25	52	15	1	12.2	3.30	1 250	335	12 000	14 000	**1205S**	**1205SK**	30.0	47.0	1
	52	18	1	12.4	3.45	1 270	350	12 000	14 000	**2205S**	**2205SK**	30.0	47.0	1
	62	17	1.1	18.2	5.00	1 850	510	10 000	13 000	**1305S**	**1305SK**	31.5	55.5	1
	62	24	1.1	24.9	6.60	2 530	675	9 500	12 000	**2305S**	**2305SK**	31.5	55.5	1
30	62	16	1	15.8	4.65	1 610	475	10 000	12 000	**1206S**	**1206SK**	35.0	57.0	1
	62	20	1	15.3	4.55	1 560	460	10 000	12 000	**2206S**	**2206SK**	35.0	57.0	1
	72	19	1.1	21.4	6.30	2 190	645	8 500	11 000	**1306S**	**1306SK**	36.5	65.5	1
	72	27	1.1	32.0	8.75	3 250	895	8 000	10 000	**2306S**	**2306SK**	36.5	65.5	1
35	72	17	1.1	15.9	5.10	1 620	520	8 500	10 000	**1207S**	**1207SK**	41.5	65.5	1
	72	23	1.1	21.7	6.60	2 210	675	8 500	10 000	**2207S**	**2207SK**	41.5	65.5	1
	80	21	1.5	25.3	7.85	2 580	800	7 500	9 500	**1307S**	**1307SK**	43.0	72.0	1.5
	80	31	1.5	40.0	11.3	4 100	1 150	7 100	9 000	**2307S**	**2307SK**	43.0	72.0	1.5

1) Smallest allowable dimension for chamfer dimension r. 2) "**K**" indicates bearings have tapered bore with a taper ratio of 1: 12.

Equivalent bearing load

dynamic

$P_r = XF_r + YF_a$

$\frac{F_a}{F_r} \leqq e$		$\frac{F_a}{F_r} > e$	
X	Y	X	Y
1	Y_1	0.65	Y_2

static

$P_{or} = F_r + Y_o F_a$

For values of e, Y_1, Y_2 and Y_o see the table below.

Constant	Axial load factors			Mass kg
e	Y_1	Y_2	Y_o	(approx.)
0.32	2.00	3.10	2.10	0.033
0.64	0.98	1.50	1.00	0.042
0.35	1.80	2.80	1.90	0.057
0.71	0.89	1.40	0.93	0.077
0.36	1.80	2.70	1.80	0.039
0.58	1.10	1.70	1.10	0.048
0.33	1.90	2.90	2.00	0.066
0.60	1.10	1.60	1.10	0.082
0.32	2.00	3.10	2.10	0.051
0.50	1.30	1.90	1.30	0.055
0.33	1.90	2.90	2.00	0.093
0.51	1.20	1.90	1.30	0.108
0.31	2.00	3.10	2.10	0.072
0.50	1.30	1.90	1.30	0.085
0.32	2.00	3.10	2.10	0.130
0.51	1.20	1.90	1.30	0.150
0.29	2.20	3.40	2.30	0.120
0.47	1.30	2.10	1.40	0.133
0.29	2.20	3.40	2.30	0.15
0.50	1.20	1.90	1.30	0.193
0.28	2.30	3.50	2.40	0.140
0.41	1.50	2.40	1.60	0.150
0.28	2.30	3.50	2.40	0.255
0.47	1.40	2.10	1.40	0.319
0.25	2.50	3.90	2.60	0.220
0.38	1.60	2.50	1.70	0.249
0.26	2.40	3.70	2.50	0.385
0.44	1.40	2.20	1.50	0.480
0.23	2.70	4.20	2.80	0.320
0.37	1.70	2.60	1.80	0.378
0.26	2.50	3.80	2.60	0.510
0.46	1.40	2.10	1.40	0.642

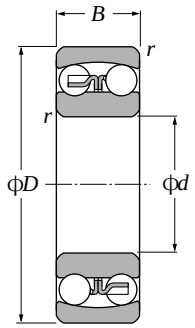

Cylindrical bore

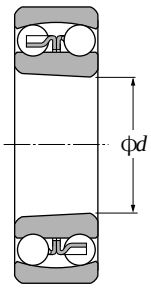

Tapered bore

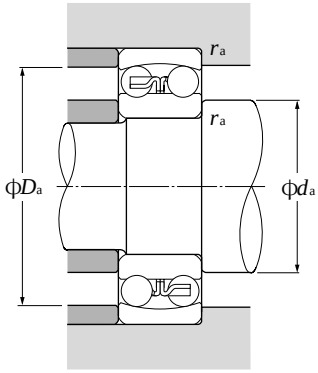

d 40～75mm

Boundary dimensions mm				Basic load ratings dynamic kN	static kN	dynamic kgf	static kgf	Limiting speeds min^{-1}		Bearing numbers		Abutment and fillet dimensions mm		
										cylindrical bore	tapered[2] bore			
d	D	B	$r_{s\,min}$[1]	C_r	C_{or}	C_r	C_{or}	grease	oil			d_a min	D_a max	r_{as} max
40	80	18	1.1	19.3	6.50	1 970	665	7 500	9 000	**1208S**	**1208SK**	46.5	73.5	1
	80	23	1.1	22.4	7.35	2 290	750	7 500	9 000	**2208S**	**2208SK**	46.5	73.5	1
	90	23	1.5	29.8	9.70	3 050	990	6 700	8 500	**1308S**	**1308SK**	48.0	82.0	1.5
	90	33	1.5	45.5	13.5	4 650	1 380	6 300	8 000	**2308S**	**2308SK**	48.0	82.0	1.5
45	85	19	1.1	22.0	7.35	2 240	750	7 100	8 500	**1209S**	**1209SK**	51.5	78.5	1
	85	23	1.1	23.3	8.15	2 380	830	7 100	8 500	**2209S**	**2209SK**	51.5	78.5	1
	100	25	1.5	38.5	12.7	3 900	1 300	6 000	7 500	**1309S**	**1309SK**	53.0	92.0	1.5
	100	36	1.5	55.0	16.7	5 600	1 700	5 600	7 100	**2309S**	**2309SK**	53.0	92.0	1.5
50	90	20	1.1	22.8	8.10	2 330	830	6 300	8 000	**1210S**	**1210SK**	56.5	83.5	1
	90	23	1.1	23.3	8.45	2 380	865	6 300	8 000	**2210S**	**2210SK**	56.5	83.5	1
	110	27	2	43.5	14.1	4 450	1 440	5 600	6 700	**1310S**	**1310SK**	59.0	101	2
	110	40	2	65.0	20.2	6 650	2 060	5 000	6 300	**2310S**	**2310SK**	59.0	101	2
55	100	21	1.5	26.9	10.0	2 750	1 020	6 000	7 100	**1211S**	**1211SK**	63.0	92.0	1.5
	100	25	1.5	26.7	9.90	2 720	1 010	6 000	7 100	**2211S**	**2211SK**	63.0	92.0	1.5
	120	29	2	51.5	17.9	5 250	1 820	5 000	6 300	**1311S**	**1311SK**	64.0	111	2
	120	43	2	76.5	24.0	7 800	2 450	4 800	6 000	**2311S**	**2311SK**	64.0	111	2
60	110	22	1.5	30.5	11.5	3 100	1 180	5 300	6 300	**1212S**	**1212SK**	68.0	102	1.5
	110	28	1.5	34.0	12.6	3 500	1 290	5 300	6 300	**2212S**	**2212SK**	68.0	102	1.5
	130	31	2.1	57.5	20.8	5 900	2 130	4 500	5 600	**1312S**	**1312SK**	71.0	119	2
	130	46	2.1	88.5	28.3	9 000	2 880	4 300	5 300	**2312S**	**2312SK**	71.0	119	2
65	120	23	1.5	31.0	12.5	3 150	1 280	4 800	6 000	**1213S**	**1213SK**	73.0	112	1.5
	120	31	1.5	43.5	16.4	4 450	1 670	4 800	6 000	**2213S**	**2213SK**	73.0	112	1.5
	140	33	2.1	62.5	22.9	6 350	2 330	4 300	5 300	**1313S**	**1313SK**	76.0	129	2
	140	48	2.1	97.0	32.5	9 900	3 300	3 800	4 800	**2313S**	**2313SK**	76.0	129	2
70	125	24	1.5	35.0	13.8	3 550	1 410	4 800	5 600	**1214S**	—	78.0	117	1.5
	125	31	1.5	44.0	17.1	4 500	1 740	4 500	5 600	**2214S**	—	78.0	117	1.5
	150	35	2.1	75.0	27.7	7 650	2 830	4 000	5 000	**1314S**	—	81.0	139	2
	150	51	2.1	111	37.5	11 300	3 850	3 600	4 500	**2314S**	—	81.0	139	2
75	130	25	1.5	39.0	15.7	4 000	1 600	4 300	5 300	**1215S**	**1215SK**	83.0	122	1.5
	130	31	1.5	44.5	17.8	4 550	1 820	4 300	5 300	**2215S**	**2215SK**	83.0	122	1.5
	160	37	2.1	80.0	30.0	8 150	3 050	3 800	4 500	**1315S**	**1315SK**	86.0	149	2
	160	55	2.1	125	43.0	12 700	4 400	3 400	4 300	**2315S**	**2315SK**	86.0	149	2

1) Smallest allowable dimension for chamfer dimension r. 2) "**K**" indicates bearings have tapered bore with a taper ratio of 1: 12.

Equivalent bearing load

dynamic

$P_r = XF_r + YF_a$

$\frac{F_a}{F_r} \leqq e$		$\frac{F_a}{F_r} > e$	
X	Y	X	Y
1	Y_1	0.65	Y_2

static

$P_{or} = F_r + Y_o F_a$

For values of e, Y_1, Y_2 and Y_o see the table below.

Constant	Axial load factors			Mass kg
e	Y_1	Y_2	Y_o	(approx.)
0.22	2.8	4.3	2.9	0.415
0.33	1.9	3.0	2.0	0.477
0.24	2.6	4.0	2.7	0.715
0.43	1.5	2.3	1.5	0.889
0.21	3.0	4.7	3.1	0.465
0.30	2.1	3.2	2.2	0.522
0.25	2.6	4.0	2.7	0.955
0.41	1.5	2.4	1.6	1.200
0.21	3.1	4.7	3.2	0.525
0.28	2.2	3.4	2.3	0.564
0.23	2.7	4.2	2.8	1.250
0.42	1.5	2.3	1.6	1.580
0.20	3.2	4.9	3.3	0.705
0.28	2.3	3.5	2.4	0.746
0.23	2.7	4.2	2.8	1.600
0.41	1.5	2.4	1.6	2.030
0.18	3.4	5.3	3.6	0.900
0.28	2.3	3.5	2.4	1.030
0.23	2.8	4.3	2.9	2.030
0.40	1.6	2.4	1.6	2.570
0.17	3.7	5.7	3.8	1.150
0.28	2.3	3.5	2.4	1.400
0.23	2.7	4.2	2.9	2.540
0.39	1.6	2.5	1.7	3.200
0.18	3.4	5.3	3.6	1.300
0.26	2.4	3.7	2.5	1.520
0.22	2.8	4.4	3.0	3.190
0.38	1.7	2.6	1.8	3.900
0.17	3.6	5.6	3.8	1.410
0.25	2.5	3.9	2.6	1.600
0.22	2.8	4.4	2.9	3.650
0.38	1.6	2.5	1.7	4.770

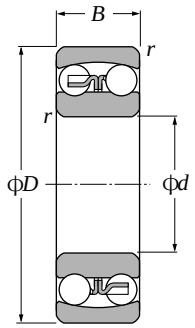

Cylindrical bore

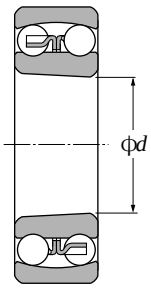

Tapered bore

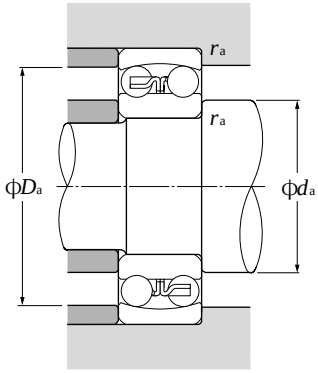

d 80～110mm

Boundary dimensions mm				Basic load ratings dynamic kN	static kN	dynamic kgf	static kgf	Limiting speeds min-1		Bearing numbers cylindrical bore	Bearing numbers tapered[2] bore	Abutment and fillet dimensions mm		
d	D	B	$r_{s\,min}$[1]	C_r	C_{or}	C_r	C_{or}	grease	oil			d_a min	D_a max	r_{as} max
80	140	26	2	40.0	17.0	4 100	1 730	4 000	5 000	**1216S**	**1216SK**	89	131	2
	140	33	2	49.0	19.9	5 000	2 030	4 000	5 000	**2216S**	**2216SK**	89	131	2
	170	39	2.1	89.0	33.0	9 100	3 400	3 600	4 300	**1316S**	**1316SK**	91	159	2
	170	58	2.1	130	45.0	13 200	4 600	3 200	4 000	**2316S**	**2316SK**	91	159	2
85	150	28	2	49.5	20.8	5 050	2 120	3 800	4 500	**1217S**	**1217SK**	94	141	2
	150	36	2	58.5	23.6	5 950	2 400	3 800	4 800	**2217S**	**2217SK**	94	141	2
	180	41	3	98.5	38.0	10 000	3 850	3 400	4 000	**1317S**	**1317SK**	98	167	2.5
	180	60	3	142	51.5	14 500	5 250	3 000	3 800	**2317S**	**2317SK**	98	167	2.5
90	160	30	2	57.5	23.5	5 850	2 400	3 600	4 300	**1218S**	**1218SK**	99	151	2
	160	40	2	70.5	28.7	7 200	2 930	3 600	4 300	**2218S**	**2218SK**	99	151	2
	190	43	3	117	44.5	12 000	4 550	3 200	3 800	**1318S**	**1318SK**	103	177	2.5
	190	64	3	154	57.5	15 700	5 850	2 800	3 600	**2318S**	**2318SK**	103	177	2.5
95	170	32	2.1	64.0	27.1	6 550	2 770	3 400	4 000	**1219S**	**1219SK**	106	159	2
	170	43	2.1	84.0	34.5	8 550	3 500	3 400	4 000	**2219S**	**2219SK**	106	159	2
	200	45	3	129	51.0	13 200	5 200	3 000	3 600	**1319S**	**1319SK**	108	187	2.5
	200	67	3	161	64.5	16 400	6 550	2 800	3 400	**2319S**	**2319SK**	108	187	2.5
100	180	34	2.1	69.5	29.7	7 100	3 050	3 200	3 800	**1220S**	**1220SK**	111	169	2
	180	46	2.1	94.5	38.5	9 650	3 900	3 200	3 800	**2220S**	**2220SK**	111	169	2
	215	47	3	140	57.5	14 300	5 850	2 800	3 400	**1320S**	**1320SK**	113	202	2.5
	215	73	3	187	79.0	19 100	8 050	2 400	3 200	**2320S**	**2320SK**	113	202	2.5
105	190	36	2.1	75.0	32.5	7 650	3 300	3 000	3 600	**1221S**	—	116	179	2
	190	50	2.1	109	45.0	11 100	4 550	3 000	3 600	**2221S**	—	116	179	2
	225	49	3	154	64.5	15 700	6 600	2 600	3 200	**1321S**	—	118	212	2.5
	225	77	3	200	87.0	20 400	8 850	2 400	3 000	**2321S**	—	118	212	2.5
110	200	38	2.1	87.0	38.5	8 900	3 950	2 800	3 400	**1222S**	**1222SK**	121	189	2
	200	53	2.1	122	51.5	12 500	5 250	2 800	3 400	**2222S**	**2222SK**	121	189	2
	240	50	3	161	72.5	16 400	7 300	2 400	3 000	**1322S**	**1322SK**	123	227	2.5
	240	80	3	211	94.5	21 600	9 650	2 200	2 800	**2322S**[3]	**2322SK**	123	227	2.5

1) Smallest allowable dimension for chamfer dimension r. 2) "**K**" indicates bearings have tapered bore with a taper ratio of 1: 12.
3) Machined cage is standard for 2322S (K).

Equivalent bearing load
dynamic

$P_r = XF_r + YF_a$

$\frac{F_a}{F_r} \leqq e$		$\frac{F_a}{F_r} > e$	
X	Y	X	Y
1	Y_1	0.65	Y_2

static

$P_{or} = F_r + Y_o F_a$

For values of e, Y_1, Y_2 and Y_o see the table below.

Constant	Axial load factors			Mass kg
e	Y_1	Y_2	Y_o	(approx.)
0.16	3.9	6.0	4.1	1.73
0.25	2.5	3.9	2.7	1.97
0.22	2.9	4.5	3.1	4.31
0.39	1.6	2.5	1.7	5.54
0.17	3.7	5.7	3.8	2.09
0.25	2.5	3.9	2.6	2.48
0.21	2.9	4.6	3.1	5.13
0.37	1.7	2.6	1.8	6.56
0.17	3.8	5.8	3.9	2.55
0.27	2.4	3.7	2.5	3.13
0.22	2.8	4.3	2.9	5.94
0.38	1.7	2.6	1.7	7.76
0.17	3.7	5.8	3.9	3.21
0.27	2.4	3.7	2.5	3.87
0.23	2.8	4.3	2.9	6.84
0.38	1.7	2.6	1.8	9.01
0.17	3.6	5.6	3.8	3.82
0.27	2.4	3.7	2.5	4.53
0.24	2.7	4.1	2.8	8.46
0.38	1.7	2.6	1.8	11.6
0.18	3.6	5.5	3.7	4.52
0.28	2.3	3.5	2.4	5.64
0.23	2.7	4.2	2.9	10.0
0.38	1.7	2.6	1.7	14.4
0.18	3.7	5.7	3.9	5.33
0.28	2.2	3.5	2.3	6.64
0.22	2.8	4.4	3.0	12.0
0.37	1.7	2.6	1.8	17.4

(for self-aligning ball bearings)

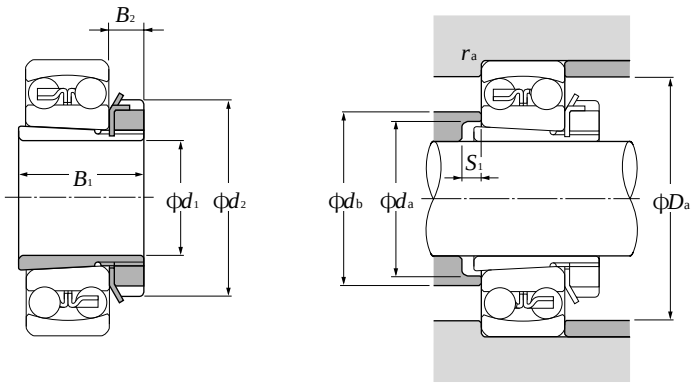

d 17～50mm

Boundary dimensions mm				Bearing numbers	Abutment and fillet dimensions mm					Mass[1] kg
					d_a	d_b	S_1	D_a	r_{as}	
d_1	B_1	d_2	B_2		min	max	min	max	max	(approx.)
17	24	32	7	1204SK;**H 204**	23	27	5	41	1	0.041
	28	32	7	2204SK;**H 304**	24	28	5	41	1	0.045
	28	32	7	1304SK;**H 304**	24	31	8	45	1	0.045
	31	32	7	2304SK;**H2304**	24	28	5	45	1	0.049
20	26	38	8	1205SK;**H 205X**	28	33	5	46	1	0.07
	29	38	8	2205SK;**H 305X**	29	33	5	46	1	0.075
	29	38	8	1305SK;**H 305X**	29	37	6	55	1	0.075
	35	38	8	2305SK;**H2305X**	29	34	5	55	1	0.087
25	27	45	8	1206SK;**H 206X**	33	39	5	56	1	0.099
	31	45	8	2206SK;**H 306X**	34	39	5	56	1	0.109
	31	45	8	1306SK;**H 306X**	34	44	6	65	1	0.109
	38	45	8	2306SK;**H2306X**	35	40	5	65	1	0.126
30	29	52	9	1207SK;**H 207X**	38	46	5	65	1	0.125
	35	52	9	2207SK;**H 307X**	39	45	5	65	1	0.142
	35	52	9	1307SK;**H 307X**	39	50	7	71.5	1.5	0.142
	43	52	9	2307SK;**H2307X**	40	46	5	71.5	1.5	0.165
35	31	58	10	1208SK;**H 208X**	44	52	5	73	1	0.174
	36	58	10	2208SK;**H 308X**	44	50	5	73	1	0.189
	36	58	10	1308SK;**H 308X**	44	56	5	81.5	1.5	0.189
	46	58	10	2308SK;**H2308X**	45	52	5	81.5	1.5	0.224
40	33	65	11	1209SK;**H 209X**	49	57	5	78	1	0.227
	39	65	11	2209SK;**H 309X**	49	57	8	78	1	0.248
	39	65	11	1309SK;**H 309X**	49	61	5	91.5	1.5	0.248
	50	65	11	2309SK;**H2309X**	50	58	5	91.5	1.5	0.28
45	35	70	12	1210SK;**H 210X**	53	62	5	83	1	0.274
	42	70	12	2210SK;**H 310X**	54	63	10	83	1	0.303
	42	70	12	1310SK;**H 310X**	54	67	5	100	2	0.303
	55	70	12	2310SK;**H2310X**	56	65	5	100	2	0.362
50	37	75	12	1211SK;**H 211X**	60	70	6	91.5	1.5	0.308

1) Refers to adapter mass.

Note: 1. For bearing dimensions, basic rated loads, and mass, refer to pages B-82 to B-84.
2. Adapters for series 12 bearings can also be used with H2 and H3 series bearings.
Caution: the B_1 dimension of H3 series bearings is longer than that of H2 series bearings.
3. Adapter numbers which are appended with the code "X" indicate narrow slit type adapters which use washer with straight inner tabs.
4. For adapter locknut and washer dimensions, please refer to pages C-2 to C-7, and C-12 to C-14.

(for self-aligning ball bearings)

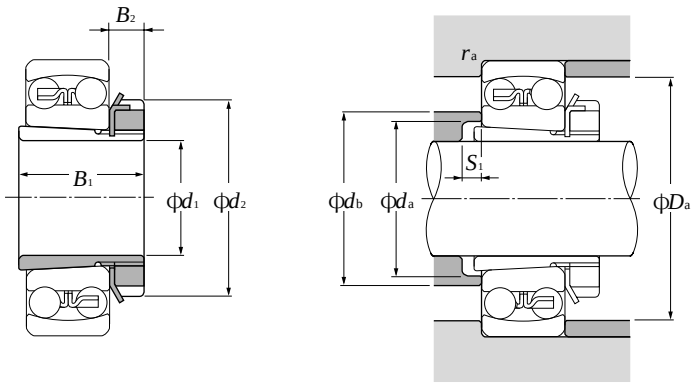

d 50～85mm

Boundary dimensions mm				Bearing numbers	Abutment and fillet dimensions mm					Mass[1] kg
					d_a	d_b	S_1	D_a	r_{as}	
d_1	B_1	d_2	B_2		min	max	min	max	max	(approx.)
50	45	75	12	2211SK;**H 311X**	60	69	11	91.5	1.5	0.345
	45	75	12	1311SK;**H 311X**	60	73	6	110	2	0.345
	59	75	12	2311SK;**H2311X**	61	71	6	110	2	0.42
55	38	80	13	1212SK;**H 212X**	64	76	5	101.5	1.5	0.346
	47	80	13	2212SK;**H 312X**	65	75	9	101.5	1.5	0.394
	47	80	13	1312SK;**H 312X**	65	79	5	118	2	0.394
	62	80	13	2312SK;**H2312X**	66	77	5	118	2	0.481
60	40	85	14	1213SK;**H 213X**	70	83	5	111.5	1.5	0.401
	50	85	14	2213SK;**H 313X**	70	81	8	111.5	1.5	0.458
	50	85	14	1313SK;**H 313X**	70	85	5	128	2	0.458
	65	85	14	2313SK;**H2313X**	72	84	5	128	2	0.557
65	43	98	15	1215SK;**H 215X**	80	93	5	121.5	1.5	0.707
	55	98	15	2215SK;**H 315X**	80	93	12	121.5	1.5	0.831
	55	98	15	1315SK;**H 315X**	80	97	5	148	2	0.831
	73	98	15	2315SK;**H2315X**	82	96	5	148	2	1.05
70	46	105	17	1216SK;**H 216X**	85	100	5	130	2	0.882
	59	105	17	2216SK;**H 316X**	86	98	12	130	2	1.03
	59	105	17	1316SK;**H 316X**	86	103	5	158	2	1.03
	78	105	17	2316SK;**H2316X**	87	103	5	158	2	1.28
75	50	110	18	1217SK;**H 217X**	90	106	6	140	2	1.02
	63	110	18	2217SK;**H 317X**	91	104	12	140	2	1.18
	63	110	18	1317SK;**H 317X**	91	110	6	166	2.5	1.18
	82	110	18	2317SK;**H2317X**	94	110	6	166	2.5	1.45
80	52	120	18	1218SK;**H 218X**	95	111	6	150	2	1.19
	65	120	18	2218SK;**H 318X**	96	112	10	150	2	1.37
	65	120	18	1318SK;**H 318X**	96	116	6	176	2.5	1.37
	86	120	18	2318SK;**H2318X**	99	117	6	176	2.5	1.69
85	55	125	19	1219SK;**H 219X**	101	118	7	158	2	1.37
	68	125	19	2219SK;**H 319X**	102	117	9	158	2	1.56

1）Refers to adapter mass.

Note: 1. For bearing dimensions, basic rated loads, and mass, refer to pages B-82 to B-84.
2. Adapters for series 12 bearings can also be used with H2 and H3 series bearings.
Caution: the B_1 dimension of H3 series bearings is longer than that of H2 series bearings.
3. Adapter numbers which are appended with the code "X" indicate narrow slit type adapters which use washer with straight inner tabs.
4. For adapter locknut and washer dimensions, please refer to pages C-2 to C-7, and C-12 to C-14.

(for self-aligning ball bearings)

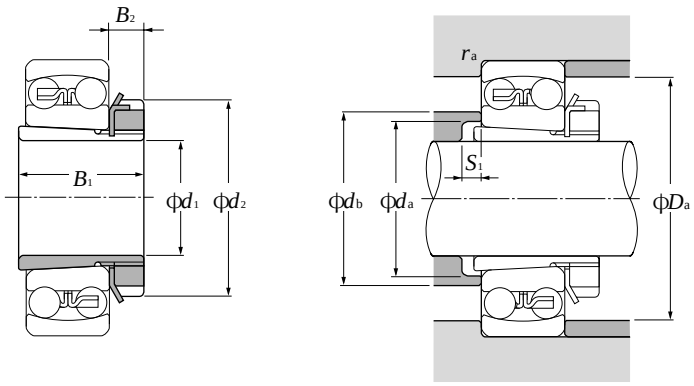

d 85～100mm

Boundary dimensions mm				Bearing numbers	Abutment and fillet dimensions mm					Mass[1] kg
					d_a	d_b	S_1	D_a	r_{as}	
d_1	B_1	d_2	B_2		min	max	min	max	max	(approx.)
85	68	125	19	1319SK;**H 319X**	102	123	7	186	2.5	1.56
	90	125	19	2319SK;**H2319X**	105	123	7	186	2.5	1.92
90	58	130	20	1220SK;**H 220X**	106	125	7	168	2	1.49
	71	130	20	2220SK;**H 320X**	107	123	8	168	2	1.69
	71	130	20	1320SK;**H 320X**	107	130	7	201	2.5	1.69
	97	130	20	2320SK;**H2320X**	110	129	7	201	2.5	2.15
100	63	145	21	1222SK;**H 222X**	116	138	7	188	2	1.93
	77	145	21	2222SK;**H 322X**	117	137	6	188	2	2.18
	77	145	21	1322SK;**H 322X**	117	150	9	226	2.5	2.18
	105	145	21	2322SK;**H2322X**	121	142	7	226	2.5	2.74

1）Refers to adapter mass.

Note: 1. For bearing dimensions, basic rated loads, and mass, refer to pages B-82 to B-84.
2. Adapters for series 12 bearings can also be used with H2 and H3 series bearings.
Caution: the B_1 dimension of H3 series bearings is longer than that of H2 series bearings.
3. Adapter numbers which are appended with the code "X" indicate narrow slit type adapters which use washer with straight inner tabs.
4. For adapter locknut and washer dimensions, please refer to pages C-2 to C-7, and C-12 to C-14.

NTN
NTN
NTN
NTN
JAPAN SA

Cylindrical roller bearing

E Type cylindrical roller bearing

Double row cylindrical roller bearing

Four row cylindrical roller bearing

1. Types, design features, and characteristics

Since the rolling elements in cylindrical roller bearings make line contact with raceways, these bearings can accommodate heavy radial loads. The rollers are guided by ribs on either the inner or outer ring, therefore these bearings are also suitable for high speed applications. Furthermore, cylindrical roller bearings are separable, and relatively easy to install and disassemble even when interference fits are required.

Among the various types of cylindrical roller bearings, Type E has a high load capacity and its boundary dimensions are identical to standard type. HT type has a large axial load capacity, and HL type provides extended wear life in conditions where the development of a lubricating film inside the bearing is difficult.

Double and multiple row bearing arrangements are also available.

For extremely heavy load applications, the non-separable full complement SL type bearing offers special advantages.

Table 1 shows the various types and characteristics of single row cylindrical roller bearings. **Table 2** shows the characteristics of non-standard type cylindrical roller bearings.

Table 1 Cylindrical roller bearing types and characteristics

Type code	Design	Characteristics
NU type **N type**	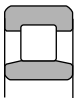 NU type 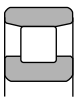 N type	● NU type outer rings have double ribs; outer ring and roller as well as cage can be separated from inner ring. N type inner ring have double ribs; inner ring and roller as well as cage can be separated from outer ring. ● Unable to accommodate even the lightest axial loads. ● This type is extremely suitable for, and widely used as, the floating side bearing.
NJ type **NF type**	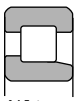 NJ type NF type	● NJ type has double ribs on outer ring, single rib on inner ring; NF type has single rib on outer ring, and double rib on inner ring. ● Can receive single direction axial loads. ● When there is no distinction between the fixed side and floating side bearing, can be used as a pair in close proximity.
NUP type **NH type** **(NJ + HJ)**	 NUP type NH type	● NUP type has a collar ring attached to the ribless side of the inner ring; NH type is NJ type with an L type collar ring attached. All of these collar rings are separable, and therefore it is necessary to fix the inner ring axially. ● Can accommodate axial loads in either direction. ● Widely used as the shaft's fixed-side bearing.

Table 2 Non-standard type cylindrical roller bearing characteristics

Bearing type	Characteristics
E Type cylindrical roller bearing	● Boundary dimensions are the same as the standard type, but the diameter, length and number of the rollers have been increased, as well as load capacity. ● Identified by addition of "E" to end of basic roller number. ● Enables compact design due to its high load rating. ● Rollers' inscribed circle diameter differs from standard type rollers and therefore cannot be interchanged. 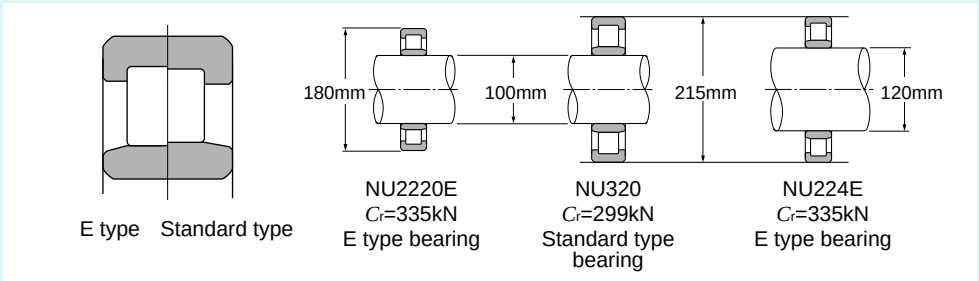 Remarks: In the dimension tables, both E type and standard type are listed, but in the future JIS will change to E type.
Large axial load use cylindrical roller bearings (HT type)	● Can accommodate larger axial loads than standard type thanks to improved geometry of the rib roller end surface. ● Please consult NTN Engineering concerning the many factors which require consideration, such as load, lubricant, and installation conditions.
Double row cylindrical roller bearings	● NN type and NNU type available. ● Widely used for applications requiring thin-walled bearings, such the main shafts of machine tools, rolling machine rollers, and in printing equipment. ● Internal radial clearance is adjusted for the spindle of machine tools by pressing the tapered bore of the inner ring on a tapered shaft.
Four row cylindrical roller bearings	● Used mainly in the necks of rolling machine rollers; designed for maximum rated load to accommodate the severely limited space in the roller neck section of such equipment. ● Many varieties exist, including sealed types, which have been specially designed for high speed use, to prevent creeping, provide dust and water proofing properties, etc. Contact NTN Engineering.
SL type cylindrical roller bearings	● Full complement roller bearing capable of handling heavy loads. ● Consult NTN Engineering regarding special application designs for SL type cylindrical roller bearings.

2. Standard cage types

Table 3 shows the standard varieties for cylindrical roller bearings.

Table 3 Standard cage types

Bearing series	Molded resin cage	Pressed cage	Machined cage
NU10	—	—	1005～10/500
NU 2 **NU2E**	— 204E～218E	208～230 —	232～264 219E～240E
NU22 **NU22E**	— 2204E～2218E	2208～2230 —	2232～2264 2219E～2240E
NU3 **NU3E**	— 304E～314E	308～324 —	326～356 315E～332E
NU23 **NU23E**	— 2304E～2311E	2308～2320 —	2322～2356 2312E～2332E
NU4	—	405～416	—

The basic road ratings listed in the dimension charts correspond to values achieved with the standard cages listed in **Table 3**. Furthermore, please note that even for the identical bearing, in cases where the number of rolling elements or the cage type differs, the basic rated load will also differ from the values listed in the dimension charts.

Note: 1) Within the same bearing series, cage type is identical even if the type code (NJ, NUP, N, NF) differs.
2) For high speed and other special applications, machined cages can be manufactured when necessary. Consult NTN Engineering.
3) Among E type bearings (those using molded resin cages), certain varieties may also use pressed cages. Consult **NTN** Engineering.
4) Although machined cages are standard for two row and four row cylindrical roller bearings, molded resin cages may also be used in some of these bearings for machine tool applications.
5) **Due to their material properties, molded resin cages cannot be used in applications where temperatures exceed 120˚C. #04 - #07 however use resin material with superior ability to withstand heat and high temperatures, which are capable of withstanding temperatures up to 150˚C.**
6) Formed resin cages capable of withstanding temperatures up to 150˚C can be manufactured by request for type E (formed resin cage) of #08 or greater. For information, please contact NTN Engineering.

3. Allowable misalignment

Although values vary somewhat depending on bearing type and internal specifications, under general load conditions, to avoid the occurrence of edge loading, allowable misalignments have been set as follows:

Bearing width series 0 or 1: ·····0.001 rad (3.5')
Bearing width series 2: ·····0.0005 rad (1.5')
Double row cylindrical roller bearings ❶ : ·····0.0005 rad (1.5')

❶ Does not include high precision bearings for machine tool main shaft applications.

4. Allowable axial load for cylindrical roller bearings

Cylindrical roller bearings with ribs on the inner and outer rings are capable of simultaneously bearing a radial load and an axial load of a certain degree. Unlike basic road ratings based on rolling fatigue, allowable axial load is determined by heat produced on the sliding surface between the ends of the rollers and rib, seizure and wear. Allowable axial load when center axial load is applied is approximately determined by formula (1), which is based upon experience and testing.

$$P_t = k \cdot d^2 \cdot P_z \quad \cdots\cdots(1)$$

Where:
P_t : Allowable axial load when rotating N {kgf}
k : Factor determined by internal design of bearing (see **Table 4**)
d : Bearing bore mm
P_z : Allowable surface pressure of rib MPa {kgf/mm^2} (see **Diagram 1**)

If axial load is greater than radial load, the rollers will not rotate properly. The allowable axial load therefore must not exceed the value for $F_{a\,max}$ given in **Table 4**.

The following are also important to operate the bearing smoothly under axial load:

(1) Do not make the internal radial clearance any larger than necessary.
(2) Use lubricant with extreme pressure additive.
(3) Make the shoulder of the housing and shaft high enough for the rib of the bearing.
(4) If the bearing is to support an extreme axial load, mounting precision should be improved and the bearing should rotate slowly before actual use.

If large cylindrical roller bearings (bore of 300 mm or more) are to support an axial load or moment load simultaneously, please contact NTN Engineering.

NTN Engineering also offers cylindrical roller bearings for high axial loads (HT type). For details, please contact NTN Engineering.

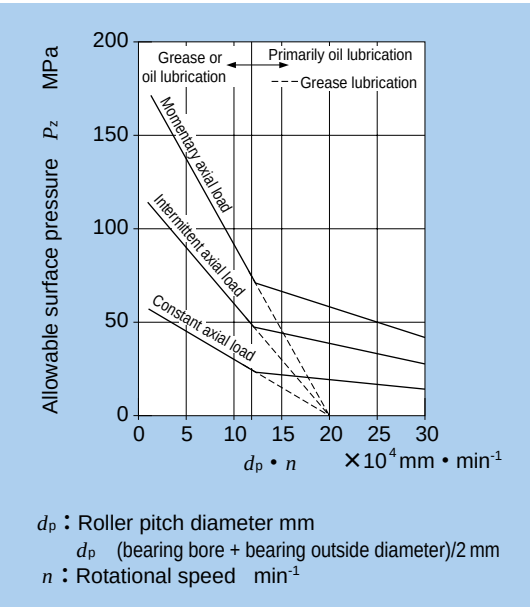

d_p : Roller pitch diameter mm
d_p (bearing bore + bearing outside diameter)/2 mm
n : Rotational speed min^{-1}

Diagram 1 Allowable surface pressure of rib

Table 4 Factor k values and allowable axial load ($F_{a\,max}$)

Bearing series	k	$F_{a\,max}$
NJ, NUP10 NJ, NUP, NF, NH2, NJ, NUP, NH22	0.040	$0.4F_r$
NJ, NUP, NF, NH3, NJ, NUP, NH23	0.065	$0.4F_r$
NJ, NUP, NH2E, NJ, NUP, NH22E	0.050	$0.4F_r$
NJ, NUP, NH3E, NJ, NUP, NH23E	0.080	$0.4F_r$
NJ, NUP, NH4,	0.100	$0.4F_r$
SL01-48	0.022	$0.2F_r$
SL01-49	0.034	$0.2F_r$
SL04-50	0.044	$0.2F_r$

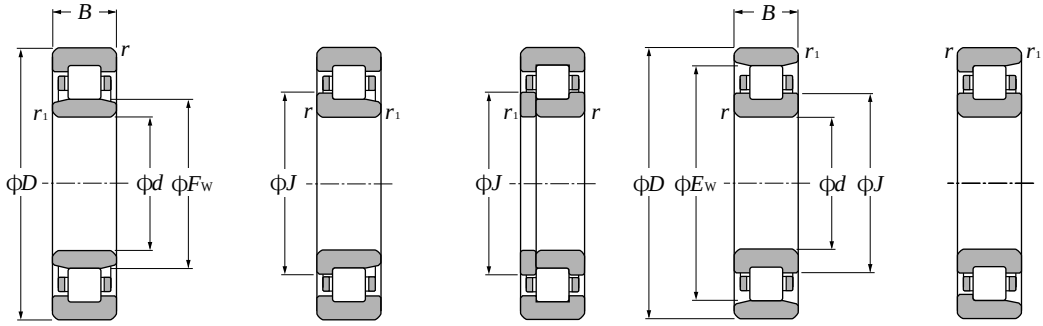

Type NU | Type NJ | Type NUP | Type N | Type NF

d 20～40mm

Boundary dimensions					Basic load ratings				Limiting speeds[1]		Bearing numbers[2]			
					dynamic	static	dynamic	static						
	mm				kN		kgf		min-1		type	type	type	type
d	D	B	$r_{s\,min}$[3]	$r_{1s\,min}$[3]	C_r	C_{or}	C_r	C_{or}	grease	oil	NU	NJ	NUP	N
20	47	14	1	0.6	25.7	22.6	2 620	2 310	15 000	18 000	NU204E	NJ	NUP	—
	47	18	1	0.6	30.5	28.3	3 100	2 890	14 000	16 000	NU2204E	NJ	NUP	—
	52	15	1.1	0.6	31.5	26.9	3 200	2 740	13 000	15 000	NU304E	NJ	NUP	—
	52	21	1.1	0.6	42.0	39.0	4 300	3 950	12 000	14 000	NU2304E	NJ	NUP	—
25	47	12	0.6	0.3	15.1	14.1	1 540	1 430	16 000	19 000	NU1005	NJ	NUP	N
	52	15	1	0.6	29.3	27.7	2 990	2 830	13 000	15 000	NU205E	NJ	NUP	—
	52	18	1	0.6	35.0	34.5	3 550	3 550	11 000	13 000	NU2205E	NJ	NUP	—
	62	17	1.1	1.1	41.5	37.5	4 250	3 800	11 000	13 000	NU305E	NJ	NUP	—
	62	24	1.1	1.1	57.0	56.0	5 800	5 700	9 700	11 000	NU2305E	NJ	NUP	—
	80	21	1.5	1.5	46.5	40.0	4 750	4 050	8 500	10 000	NU405	NJ	NUP	N
30	55	13	1	0.6	19.7	19.6	2 000	2 000	14 000	16 000	NU1006	NJ	NUP	N
	62	16	1	0.6	39.0	37.5	4 000	3 800	11 000	13 000	NU206E	NJ	NUP	—
	62	20	1	0.6	49.0	50.0	5 000	5 100	9 700	11 000	NU2206E	NJ	NUP	—
	72	19	1.1	1.1	53.0	50.0	5 400	5 100	9 300	11 000	NU306E	NJ	NUP	—
	72	27	1.1	1.1	74.5	77.5	7 600	7 900	8 300	9 700	NU2306E	NJ	NUP	—
	90	23	1.5	1.5	62.5	55.0	6 400	5 600	7 300	8 500	NU406	NJ	NUP	N
35	62	14	1	0.6	22.6	23.2	2 310	2 360	12 000	15 000	NU1007	NJ	NUP	N
	72	17	1.1	0.6	50.5	50.0	5 150	5 100	9 500	11 000	NU207E	NJ	NUP	—
	72	23	1.1	0.6	61.5	65.5	6 300	6 650	8 500	10 000	NU2207E	NJ	NUP	—
	80	21	1.5	1.1	71.0	71.0	7 200	7 200	8 100	9 600	NU307E	NJ	NUP	—
	80	31	1.5	1.1	99.0	109	10 100	11 100	7 200	8 500	NU2307E	NJ	NUP	—
	100	25	1.5	1.5	75.5	69.0	7 700	7 050	6 400	7 500	NU407	NJ	NUP	N
40	68	15	1	0.6	27.3	29.0	2 780	2 950	11 000	13 000	NU1008	NJ	NUP	N
	80	18	1.1	1.1	43.5	43.0	4 450	4 350	9 400	11 000	NU208	NJ	NUP	N
	80	18	1.1	1.1	55.5	55.5	5 700	5 650	8 500	10 000	NU208E	NJ	NUP	—
	80	23	1.1	1.1	58.0	62.0	5 950	6 300	8 500	10 000	NU2208	NJ	NUP	N
	80	23	1.1	1.1	72.5	77.5	7 400	7 900	7 600	8 900	NU2208E	NJ	NUP	—
	90	23	1.5	1.5	58.5	57.0	6 000	5 800	8 000	9 400	NU308	NJ	NUP	N
	90	23	1.5	1.5	83.0	81.5	8 500	8 300	7 200	8 500	NU308E	NJ	NUP	—
	90	33	1.5	1.5	82.5	88.0	8 400	8 950	7 000	8 200	NU2308	NJ	NUP	N
	90	33	1.5	1.5	114	122	11 600	12 500	6 400	7 500	NU2308E	NJ	NUP	—
	110	27	2	2	95.5	89.0	9 750	9 100	5 700	6 700	NU408	NJ	NUP	N

1) This value achieved with machined cages; when pressed cages are used, 80% of this value is acceptable.
2) Production switched to E type only for bearing number for which there is no standard form.
3) Minimal allowable dimension for chamfer dimension r or r_1.

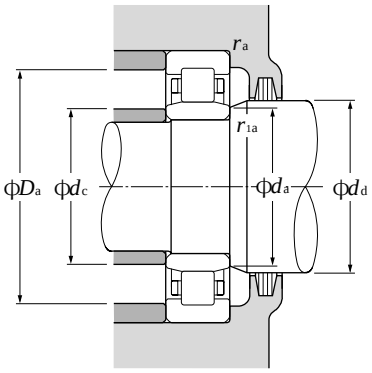

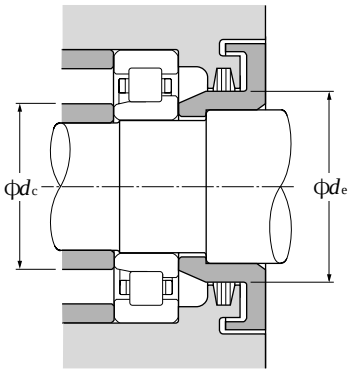

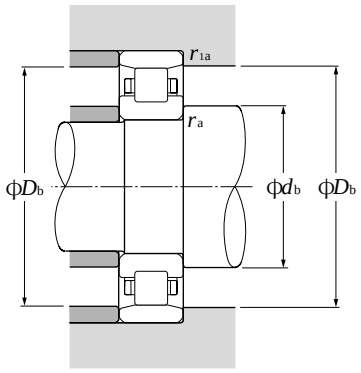

Dynamic equivalent radial load
$P_r = F_r$

Static equivalent radial load
$P_{or} = F_r$

Dimensions				Abutment and fillet dimensions										Mass	
mm				mm										kg	
type NF	F_w	E_w	J	d_a min	d_b min	d_c max	d_d min	d_e min	D_a max	D_b max	D_b min[4]	r_{as} max	r_{1as} max	type NU (approx.)	type N (approx.)
—	26.5	—	29.5	24	—	26	29	32	42	—	—	1	0.6	0.122	—
—	26.5	—	29.5	24	—	26	29	32	42	—	—	1	0.6	0.158	—
—	27.5	—	31.1	24	—	27	30	33	45.5	—	—	1	0.6	0.176	—
—	27.5	—	31.1	24	—	27	30	33	45.5	—	—	1	0.6	0.242	—
—	30.5	41.5	32.7	27	29	30	32	33	43	45	42.5	0.6	0.3	0.092	0.091
—	31.5	—	34.5	29	—	31	34	37	47	—	—	1	0.6	0.151	—
—	31.5	—	34.5	29	—	31	34	37	47	—	—	1	0.6	0.186	—
—	34	—	38	31.5	—	33	37	40	55.5	—	—	1	1	0.275	—
—	34	—	38	31.5	—	33	37	40	55.5	—	—	1	1	0.386	—
NF	38.8	62.8	43.6	33	33	38	41	46	72	72	64	1.5	1.5	0.55	0.536
—	36.5	48.5	38.9	34	35	35	38	39.5	50	51	49.5	1	0.6	0.13	0.128
—	37.5	—	41.1	34	—	37	40	44	57	—	—	1	0.6	0.226	—
—	37.5	—	41.1	34	—	37	40	44	57	—	—	1	0.6	0.297	—
—	40.5	—	44.9	36.5	—	40	44	48	65.5	—	—	1	1	0.398	—
—	40.5	—	44.9	36.5	—	40	44	48	65.5	—	—	1	1	0.58	—
NF	45	73	50.5	38	38	44	47	52	82	82	74	1.5	1.5	0.751	0.732
—	42	55	44.6	39	40	41	44	45	57	58	56	1	0.6	0.179	0.176
—	44	—	48	39	—	43	46	50	65.5	—	—	1	0.6	0.327	—
—	44	—	48	39	—	43	46	50	65.5	—	—	1	0.6	0.455	—
—	46.2	—	51	41.5	—	45	48	53	72	—	—	1.5	1	0.545	—
—	46.2	—	51	41.5	—	45	48	53	72	—	—	1.5	1	0.78	—
NF	53	83	59	43	43	52	55	61	92	92	84	1.5	1.5	0.99	0.965
—	47	61	49.8	44	45	46	49	50.5	63	64	62	1	0.6	0.22	0.217
NF	50	70	54.2	46.5	46.5	49	52	56	73.5	73.5	72	1	1	0.378	0.37
—	49.5	—	53.9	46.5	—	49	52	56	73.5	—	—	1	1	0.426	—
—	50	70	54.2	46.5	46.5	49	52	56	73.5	73.5	72	1	1	0.49	0.48
—	49.5	—	53.9	46.5	—	49	52	56	73.5	—	—	1	1	0.552	—
NF	53.5	77.5	58.4	48	48	51	55	60	82	82	80	1.5	1.5	0.658	0.643
—	52	—	57.6	48	—	51	55	60	82	—	—	1.5	1.5	0.754	—
—	53.5	77.5	58.4	48	48	51	55	60	82	82	80	1.5	1.5	0.951	0.932
—	52	—	57.6	48	—	51	55	60	82	—	—	1.5	1.5	1.06	—
NF	58	92	64.8	49	49	57	60	67	101	101	93	2	2	1.3	1.27

4）Does not apply to side of the outer ring rib of type **NF** bearings.

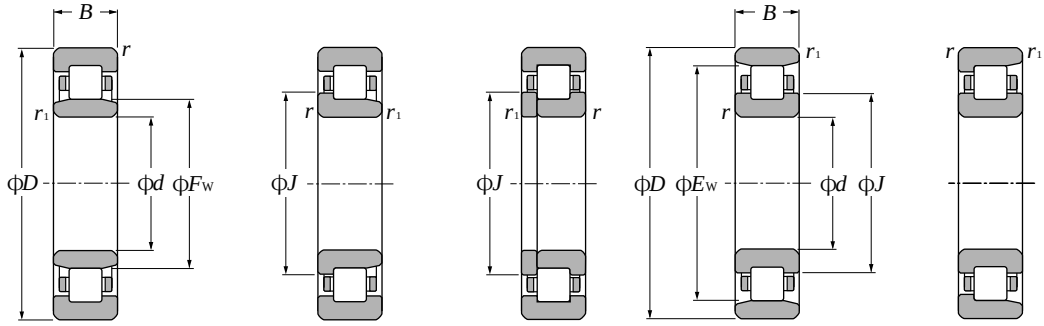

Type NU | Type NJ | Type NUP | Type N | Type NF

d 45～60mm

Boundary dimensions					Basic load ratings				Limiting speeds[1]		Bearing numbers[2]			
					dynamic	static	dynamic	static						
	mm				kN		kgf		min^{-1}		type	type	type	type
d	D	B	$r_{s\,min}$[3]	$r_{1s\,min}$[3]	C_r	C_{or}	C_r	C_{or}	grease	oil	NU	NJ	NUP	N
45	75	16	1	0.6	31.0	34.0	3 200	3 450	9 900	12 000	NU1009	NJ	NUP	N
	85	19	1.1	1.1	46.0	47.0	4 700	4 800	8 400	9 900	NU209	NJ	NUP	N
	85	19	1.1	1.1	63.0	66.5	6 450	6 800	7 600	9 000	NU209E	NJ	NUP	—
	85	23	1.1	1.1	61.5	68.0	6 250	6 900	7 600	9 000	NU2209	NJ	NUP	N
	85	23	1.1	1.1	76.0	84.5	7 750	8 600	6 800	8 000	NU2209E	NJ	NUP	—
	100	25	1.5	1.5	74.0	71.0	7 550	7 250	7 200	8 400	NU309	NJ	NUP	N
	100	25	1.5	1.5	97.5	98.5	9 950	10 000	6 500	7 600	NU309E	NJ	NUP	—
	100	36	1.5	1.5	99.0	104	10 100	10 600	6 300	7 400	NU2309	NJ	NUP	N
	100	36	1.5	1.5	137	153	14 000	15 600	5 700	6 800	NU2309E	NJ	NUP	—
	120	29	2	2	107	102	10 900	10 400	5 100	6 000	NU409	NJ	NUP	N
50	80	16	1	0.6	32.0	36.0	3 300	3 700	8 900	11 000	NU1010	NJ	NUP	N
	90	20	1.1	1.1	48.0	51.0	4 900	5 200	7 600	9 000	NU210	NJ	NUP	N
	90	20	1.1	1.1	66.0	72.0	6 750	7 350	6 900	8 100	NU210E	NJ	NUP	—
	90	23	1.1	1.1	64.0	73.5	6 550	7 500	6 900	8 100	NU2210	NJ	NUP	N
	90	23	1.1	1.1	79.5	91.5	8 100	9 350	6 200	7 300	NU2210E	NJ	NUP	—
	110	27	2	2	87.0	86.0	8 850	8 800	6 500	7 700	NU310	NJ	NUP	N
	110	27	2	2	110	113	11 200	11 500	5 900	6 900	NU310E	NJ	NUP	—
	110	40	2	2	121	131	12 300	13 400	5 700	6 700	NU2310	NJ	NUP	N
	110	40	2	2	163	187	16 600	19 000	5 200	6 100	NU2310E	NJ	NUP	—
	130	31	2.1	2.1	129	124	13 200	12 600	4 700	5 500	NU410	NJ	NUP	N
55	90	18	1.1	1	37.5	44.0	3 850	4 450	8 200	9 700	NU1011	NJ	NUP	N
	100	21	1.5	1.1	58.0	62.5	5 900	6 350	6 900	8 200	NU211	NJ	NUP	N
	100	21	1.5	1.1	82.5	93.0	8 400	9 500	6 300	7 400	NU211E	NJ	NUP	—
	100	25	1.5	1.1	75.5	87.0	7 700	8 900	6 300	7 400	NU2211	NJ	NUP	N
	100	25	1.5	1.1	97.0	114	9 900	11 700	5 600	6 600	NU2211E	NJ	NUP	—
	120	29	2	2	111	111	11 300	11 400	5 900	7 000	NU311	NJ	NUP	N
	120	29	2	2	137	143	14 000	14 600	5 300	6 300	NU311E	NJ	NUP	—
	120	43	2	2	148	162	15 100	16 500	5 200	6 100	NU2311	NJ	NUP	N
	120	43	2	2	201	233	20 500	23 800	4 700	5 600	NU2311E	NJ	NUP	—
	140	33	2.1	2.1	139	138	14 200	14 100	4 300	5 000	NU411	NJ	NUP	N
60	95	18	1.1	1	40.0	48.5	4 100	4 950	7 500	8 800	NU1012	NJ	NUP	N
	110	22	1.5	1.5	68.5	75.0	7 000	7 650	6 400	7 600	NU212	NJ	NUP	N
	110	22	1.5	1.5	97.5	107	9 950	10 900	5 800	6 800	NU212E	NJ	NUP	—
	110	28	1.5	1.5	96.0	116	9 800	11 800	5 800	6 800	NU2212	NJ	NUP	N

1) This value achieved with machined cages; when pressed cages are used, 80% of this value is acceptable.
2) Production switched to E type only for bearing number for which there is no standard form.
3) Minimal allowable dimension for chamfer dimension r or r_1.

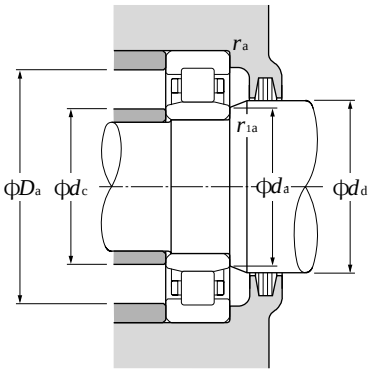

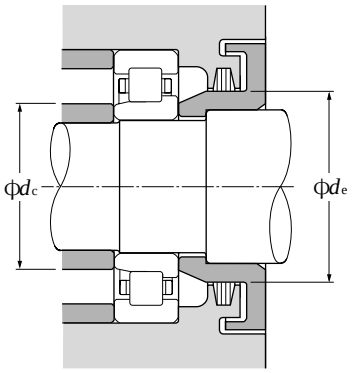

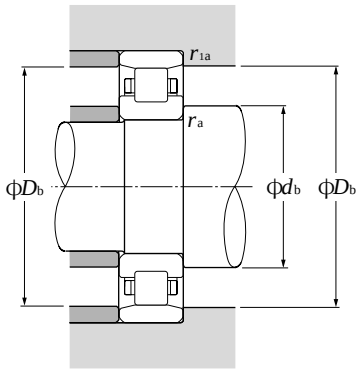

Dynamic equivalent radial load
$P_r = F_r$

Static equivalent radial load
$P_{or} = F_r$

Dimensions				Abutment and fillet dimensions										Mass	
mm				mm										kg	
type NF	F_w	E_w	J	d_a min	d_b min	d_c max	d_d min	d_e min	D_a max	D_b max	D_b min[4)]	r_{as} max	r_{1as} max	type NU (approx.)	type N (approx.)
—	52.5	67.5	55.5	49	50	52	54	56	70	71	68.5	1	0.6	0.28	0.276
NF	55	75	59	51.5	51.5	54	57	61	78.5	78.5	77	1	1	0.432	0.423
—	54.5	—	58.9	51.5	—	54	57	61	78.5	—	—	1	1	0.495	—
—	55	75	59	51.5	51.5	54	57	61	78.5	78.5	77	1	1	0.53	0.52
—	54.5	—	58.9	51.5	—	54	57	61	78.5	—	—	1	1	0.6	—
NF	58.5	86.5	64	53	53	57	60	66	92	92	89	1.5	1.5	0.877	0.857
—	58.5	—	64.5	53	—	57	60	66	92	—	—	1.5	1.5	0.996	—
—	58.5	86.5	64	53	53	57	60	66	92	92	89	1.5	1.5	1.27	1.24
—	58.5	—	64.5	53	—	57	60	66	92	—	—	1.5	1.5	1.41	—
NF	64.5	100.5	71.8	54	54	63	66	74	111	111	102	2	2	1.62	1.58
—	57.5	72.5	60.5	54	55	57	59	61	75	76	73.5	1	0.6	0.295	0.291
NF	60.4	80.4	64.6	56.5	56.5	58	62	67	83.5	83.5	83	1	1	0.47	0.46
—	59.5	—	63.9	56.5	—	58	62	67	83.5	—	—	1	1	0.54	—
—	60.4	80.4	64.6	56.5	56.5	58	62	67	83.5	83.5	83	1	1	0.571	0.56
—	59.5	—	63.9	56.5	—	58	62	67	83.5	—	—	1	1	0.652	—
NF	65	95	71	59	59	63	67	73	101	101	98	2	2	1.14	1.11
—	65	—	71.4	59	—	63	67	73	101	—	—	2	2	1.3	—
—	65	95	71	59	59	63	67	73	101	101	98	2	2	1.7	1.67
—	65	—	71.4	59	—	63	67	73	101	—	—	2	2	1.9	—
NF	70.8	110.8	78.8	61	61	69	73	81	119	119	112	2	2	2.02	1.97
—	64.5	80.5	67.7	60	61.5	63	66	68.5	83.5	85	81.5	1	1	0.442	0.435
NF	66.5	88.5	70.8	61.5	63	65	68	73	92	93.5	91	1.5	1	0.638	0.626
—	66	—	70.8	61.5	—	65	68	73	92	—	—	1.5	1	0.718	—
—	66.5	88.5	70.8	61.5	63	65	68	73	92	93.5	91	1.5	1	0.773	0.758
—	66	—	70.8	61.5	—	65	68	73	92	—	—	1.5	1	0.968	—
NF	70.5	104.5	77.2	64	64	69	72	80	111	111	107	2	2	1.45	1.42
—	70.5	—	77.7	64	—	69	72	80	111	—	—	2	2	1.65	—
—	70.5	104.5	77.2	64	64	69	72	80	111	111	107	2	2	2.17	2.13
—	70.5	—	77.7	64	—	69	72	80	111	—	—	2	2	2.37	—
NF	77.2	117.2	85.2	66	66	76	79	87	129	129	119	2	2	2.48	2.42
—	69.5	85.5	72.7	65	66.5	68	71	73.5	88.5	90	86.5	1	1	0.474	0.467
NF	73.5	97.5	78.4	68	68	71	75	80	102	102	100	1.5	1.5	0.818	0.802
—	72	—	77.6	68	—	71	75	80	102	—	—	1.5	1.5	0.923	—
—	73.5	97.5	78.4	68	68	71	75	80	102	102	100	1.5	1.5	1.06	1.04

4) Does not apply to side of the outer ring rib of type **NF** bearings.

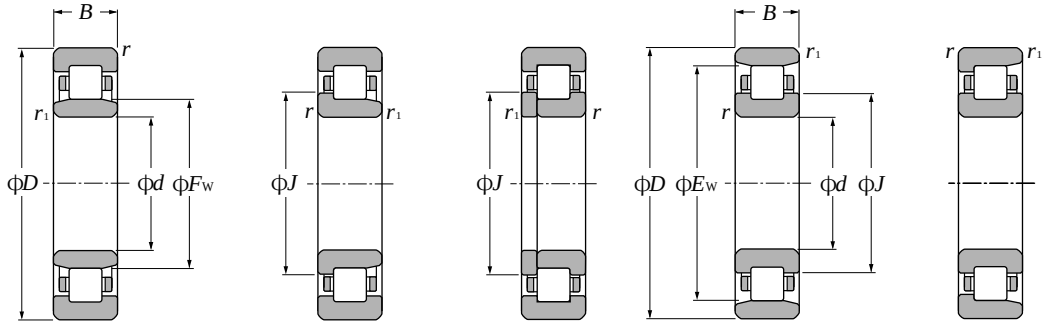

Type NU | Type NJ | Type NUP | Type N | Type NF

d 60～75mm

Boundary dimensions					Basic load ratings				Limiting speeds[1]		Bearing numbers[2]			
					dynamic	static	dynamic	static						
	mm				kN		kgf		min^{-1}		type	type	type	type
d	D	B	$r_{s\,min}$[3]	$r_{1s\,min}$[3]	C_r	C_{or}	C_r	C_{or}	grease	oil	NU	NJ	NUP	N
60	110	28	1.5	1.5	131	157	13 400	16 000	5 200	6 100	NU2212E	NJ	NUP	—
	130	31	2.1	2.1	124	126	12 600	12 900	5 500	6 500	NU312	NJ	NUP	N
	130	31	2.1	2.1	150	157	15 200	16 000	4 900	5 800	NU312E	NJ	NUP	—
	130	46	2.1	2.1	169	188	17 200	19 200	4 800	5 700	NU2312	NJ	NUP	N
	130	46	2.1	2.1	222	262	22 700	26 700	4 400	5 200	NU2312E	NJ	NUP	—
	150	35	2.1	2.1	167	168	17 100	17 200	3 900	4 600	NU412	NJ	NUP	N
65	100	18	1.1	1	41.0	51.0	4 200	5 200	7 000	8 200	NU1013	NJ	NUP	N
	120	23	1.5	1.5	84.0	94.5	8 550	9 650	5 900	7 000	NU213	NJ	NUP	N
	120	23	1.5	1.5	108	119	11 000	12 100	5 400	6 300	NU213E	NJ	NUP	—
	120	31	1.5	1.5	120	149	12 200	15 200	5 400	6 300	NU2213	NJ	NUP	N
	120	31	1.5	1.5	149	181	15 200	18 400	4 800	5 600	NU2213E	NJ	NUP	—
	140	33	2.1	2.1	135	139	13 800	14 200	5 100	6 000	NU313	NJ	NUP	N
	140	33	2.1	2.1	181	191	18 400	19 500	4 600	5 400	NU313E	NJ	NUP	—
	140	48	2.1	2.1	188	212	19 100	21 700	4 400	5 200	NU2313	NJ	NUP	N
	140	48	2.1	2.1	248	287	25 200	29 300	4 100	4 800	NU2313E	NJ	NUP	—
	160	37	2.1	2.1	182	186	18 600	19 000	3 600	4 300	NU413	NJ	NUP	N
70	110	20	1.1	1	58.5	70.5	5 950	7 200	6 500	7 600	NU1014	NJ	NUP	N
	125	24	1.5	1.5	83.5	95.0	8 500	9 700	5 500	6 500	NU214	NJ	NUP	N
	125	24	1.5	1.5	119	137	12 100	14 000	5 000	5 900	NU214E	NJ	NUP	—
	125	31	1.5	1.5	119	151	12 200	15 400	5 000	5 900	NU2214	NJ	NUP	N
	125	31	1.5	1.5	156	194	15 900	19 800	4 500	5 200	NU2214E	NJ	NUP	—
	150	35	2.1	2.1	158	168	16 100	17 200	4 700	5 500	NU314	NJ	NUP	N
	150	35	2.1	2.1	205	222	20 900	22 600	4 200	5 000	NU314E	NJ	NUP	—
	150	51	2.1	2.1	223	262	22 700	26 700	4 100	4 800	NU2314	NJ	NUP	N
	150	51	2.1	2.1	274	325	27 900	33 000	3 800	4 400	NU2314E	NJ	NUP	—
	180	42	3	3	228	236	23 200	24 000	3 400	4 000	NU414	NJ	NUP	N
75	115	20	1.1	1	60.0	74.5	6 100	7 600	6 100	7 100	NU1015	NJ	NUP	N
	130	25	1.5	1.5	96.5	111	9 850	11 300	5 100	6 000	NU215	NJ	NUP	N
	130	25	1.5	1.5	130	156	13 300	16 000	4 700	5 500	NU215E	NJ	NUP	—
	130	31	1.5	1.5	130	162	13 200	16 500	4 700	5 500	NU2215	NJ	NUP	N
	130	31	1.5	1.5	162	207	16 500	21 100	4 200	4 900	NU2215E	NJ	NUP	—
	160	37	2.1	2.1	190	205	19 400	20 900	4 400	5 200	NU315	NJ	NUP	N
	160	37	2.1	2.1	240	263	24 500	26 800	4 000	4 700	NU315E	NJ	NUP	—
	160	55	2.1	2.1	258	300	26 300	31 000	3 800	4 500	NU2315	NJ	NUP	N

1) This value achieved with machined cages; when pressed cages are used, 80% of this value is acceptable.
2) Production switched to E type only for bearing number for which there is no standard form.
3) Minimal allowable dimension for chamfer dimension r or r_1.

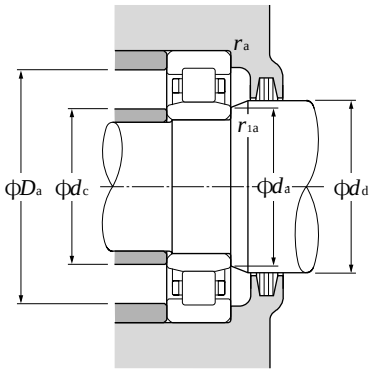

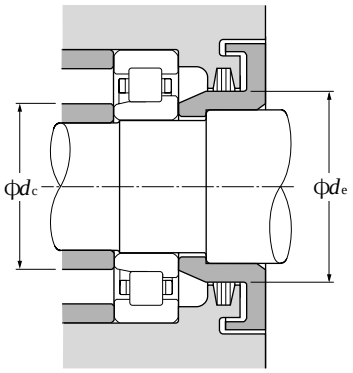

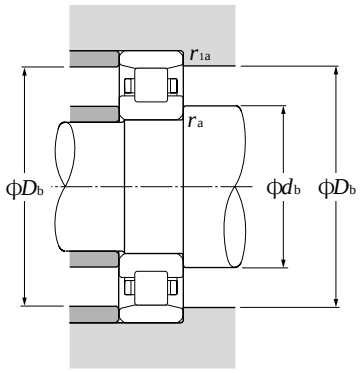

Dynamic equivalent radial load
$P_r = F_r$

Static equivalent radial load
$P_{or} = F_r$

Dimensions				Abutment and fillet dimensions										Mass	
mm				mm										kg	
type NF	F_w	E_w	J	d_a min	d_b min	d_c max	d_d min	d_e min	D_a max	D_b max	D_b min[4)]	r_{as} max	r_{1as} max	type NU (approx.)	type N (approx.)
—	72	—	77.6	68	—	71	75	80	102	—	—	1.5	1.5	1.21	—
NF	77	113	84.2	71	71	75	79	86	119	119	116	2	2	1.8	1.76
—	77	—	84.6	71	—	75	79	86	119	—	—	2	2	2.05	—
—	77	113	84.2	71	71	75	79	86	119	119	116	2	2	2.71	2.66
—	77	—	84.6	71	—	75	79	86	119	—	—	2	2	2.96	—
NF	83	127	91.8	71	71	82	85	94	139	139	128	2	2	3	2.93
—	74.5	90.5	77.7	70	71.5	73	76	78.5	93.5	95	91.5	1	1	0.485	0.477
NF	79.6	105.6	84.8	73	73	77	81	87	112	112	108	1.5	1.5	1.02	1
—	78.5	—	84.5	73	—	77	81	87	112	—	—	1.5	1.5	1.21	—
—	79.6	105.6	84.8	73	73	77	81	87	112	112	108	1.5	1.5	1.4	1.37
—	78.5	—	84.5	73	—	77	81	87	112	—	—	1.5	1.5	1.6	—
NF	83.5	121.5	91	76	76	81	85	93	129	129	125	2	2	2.23	2.18
—	82.5	—	91	76	—	81	85	93	129	—	—	2	2	2.54	—
—	83.5	121.5	91	76	76	81	85	93	129	129	125	2	2	3.27	3.2
—	82.5	—	91	76	—	81	85	93	129	—	—	2	2	3.48	—
NF	89.3	135.3	98.5	76	76	88	91	100	149	149	137	2	2	3.6	3.5
—	80	100	84	75	76.5	78	82	85	103.5	105	101	1	1	0.699	0.689
NF	84.5	110.5	89.6	78	78	82	86	92	117	117	114	1.5	1.5	1.12	1.1
—	83.5	—	89.5	78	—	82	86	92	117	—	—	1.5	1.5	1.3	—
—	84.5	110.5	89.6	78	78	82	86	92	117	117	114	1.5	1.5	1.47	1.44
—	83.5	—	89.5	78	—	82	86	92	117	—	—	1.5	1.5	1.7	—
NF	90	130	98	81	81	87	92	100	139	139	134	2	2	2.71	2.65
—	89	—	98	81	—	87	92	100	139	—	—	2	2	3.1	—
—	90	130	98	81	81	87	92	100	139	139	134	2	2	3.98	3.9
—	89	—	98	81	—	87	92	100	139	—	—	2	2	4.25	—
NF	100	152	110.5	83	83	99	102	112	167	167	153	2.5	2.5	5.24	5.1
—	85	105	89	80	81.5	83	87	90	108.5	110	106	1	1	0.738	0.727
NF	88.5	116.5	94	83	83	87	90	96	122	122	120	1.5	1.5	1.23	1.21
—	88.5	—	94.5	83	—	87	90	96	122	—	—	1.5	1.5	1.41	—
—	88.5	116.5	94	83	83	87	90	96	122	122	120	1.5	1.5	1.55	1.52
—	88.5	—	94.5	83	—	87	90	96	122	—	—	1.5	1.5	1.79	—
NF	95.5	139.5	104.2	86	86	93	97	106	149	149	143	2	2	3.28	3.21
—	95	—	104.6	86	—	93	97	106	149	—	—	2	2	3.74	—
—	95.5	139.5	104.2	86	86	93	97	106	149	149	143	2	2	4.87	4.77

4) Does not apply to side of the outer ring rib of type **NF** bearings.

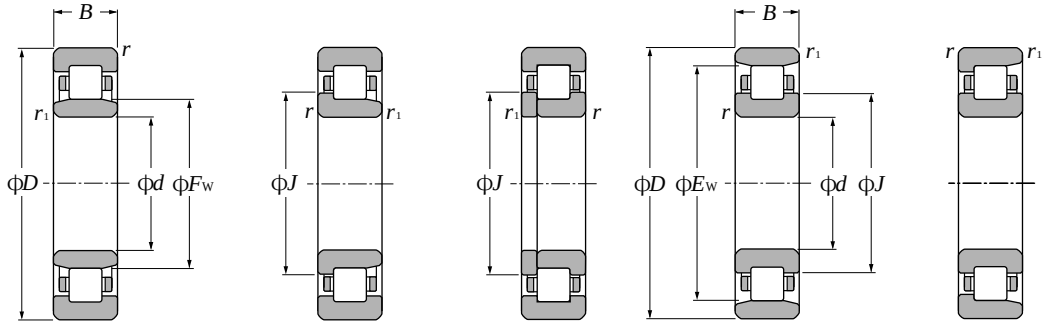

Type NU | Type NJ | Type NUP | Type N | Type NF

d 75～95mm

Boundary dimensions					Basic load ratings				Limiting speeds[1]		Bearing numbers[2]			
					dynamic	static	dynamic	static						
	mm				kN		kgf		min-1		type	type	type	type
d	D	B	$r_{s\,min}$[3]	$r_{1s\,min}$[3]	C_r	C_{or}	C_r	C_{or}	grease	oil	NU	NJ	NUP	N
75	160	55	2.1	2.1	330	395	33 500	40 000	3 500	4 100	NU2315E	NJ	NUP	—
	190	45	3	3	262	274	26 800	27 900	3 200	3 700	NU415	NJ	NUP	N
80	125	22	1.1	1	72.5	90.5	7 400	9 250	5 700	6 700	NU1016	NJ	NUP	N
	140	26	2	2	106	122	10 800	12 500	4 800	5 700	NU216	NJ	NUP	N
	140	26	2	2	139	167	14 200	17 000	4 400	5 100	NU216E	NJ	NUP	—
	140	33	2	2	147	186	15 000	19 000	4 400	5 100	NU2216	NJ	NUP	N
	140	33	2	2	186	243	19 000	24 800	3 900	4 600	NU2216E	NJ	NUP	—
	170	39	2.1	2.1	190	207	19 400	21 100	4 100	4 800	NU316	NJ	NUP	N
	170	39	2.1	2.1	256	282	26 100	28 800	3 700	4 400	NU316E	NJ	NUP	—
	170	58	2.1	2.1	274	330	27 900	34 000	3 600	4 200	NU2316	NJ	NUP	N
	170	58	2.1	2.1	355	430	36 500	44 000	3 300	3 900	NU2316E	NJ	NUP	—
	200	48	3	3	299	315	30 500	32 000	3 000	3 500	NU416	NJ	NUP	N
85	130	22	1.1	1	74.5	95.5	7 600	9 750	5 400	6 300	NU1017	NJ	NUP	N
	150	28	2	2	120	140	12 300	14 300	4 500	5 300	NU217	NJ	NUP	N
	150	28	2	2	167	199	17 000	20 300	4 100	4 800	NU217E	NJ	NUP	—
	150	36	2	2	170	218	17 300	22 200	4 100	4 800	NU2217	NJ	NUP	N
	150	36	2	2	217	279	22 200	28 400	3 700	4 300	NU2217E	NJ	NUP	—
	180	41	3	3	212	228	21 600	23 300	3 900	4 600	NU317	NJ	NUP	N
	180	41	3	3	291	330	29 700	33 500	3 500	4 100	NU317E	NJ	NUP	—
	180	60	3	3	315	380	32 000	39 000	3 400	4 000	NU2317	NJ	NUP	N
	180	60	3	3	395	485	40 000	49 500	3 100	3 700	NU2317E	NJ	NUP	—
90	140	24	1.5	1.1	88.0	114	9 000	11 700	5 100	5 900	NU1018	NJ	NUP	N
	160	30	2	2	152	178	15 500	18 100	4 300	5 000	NU218	NJ	NUP	N
	160	30	2	2	182	217	18 500	22 200	3 900	4 600	NU218E	NJ	NUP	—
	160	40	2	2	197	248	20 100	25 300	3 900	4 600	NU2218	NJ	NUP	N
	160	40	2	2	242	315	24 700	32 000	3 500	4 100	NU2218E	NJ	NUP	—
	190	43	3	3	240	265	24 500	27 100	3 700	4 300	NU318	NJ	NUP	N
	190	43	3	3	315	355	32 000	36 000	3 300	3 900	NU318E	NJ	NUP	—
	190	64	3	3	325	395	33 500	40 000	3 200	3 800	NU2318	NJ	NUP	N
	190	64	3	3	435	535	44 500	54 500	2 900	3 400	NU2318E	NJ	NUP	—
95	145	24	1.5	1.1	90.5	120	9 250	12 300	4 800	5 600	NU1019	NJ	NUP	N
	170	32	2.1	2.1	166	195	16 900	19 900	4 000	4 700	NU219	NJ	NUP	N
	170	32	2.1	2.1	220	265	22 500	27 000	3 600	4 300	NU219E	NJ	NUP	—

1) This value achieved with machined cages; when pressed cages are used, 80% of this value is acceptable.
2) Production switched to E type only for bearing number for which there is no standard form.
3) Minimal allowable dimension for chamfer dimension r or r_1.

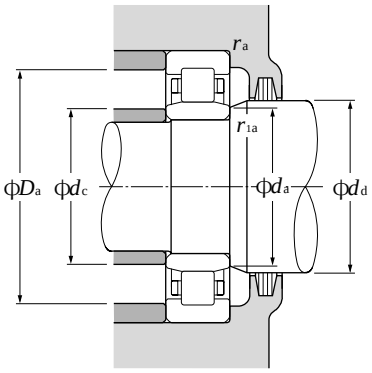

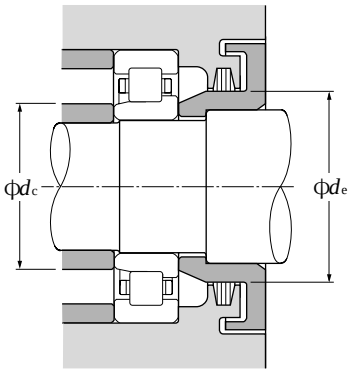

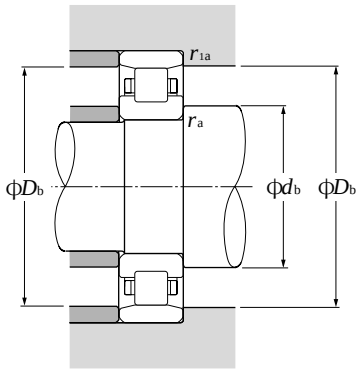

Dynamic equivalent radial load
$P_r = F_r$

Static equivalent radial load
$P_{or} = F_r$

Dimensions				Abutment and fillet dimensions										Mass	
mm				mm										kg	
type NF	F_w	E_w	J	d_a min	d_b min	d_c max	d_d min	d_e min	D_a max	D_b max	D_b min[4]	r_{as} max	r_{1as} max	type NU (approx.)	type N (approx.)
—	95	—	104.6	86	—	93	97	106	149	—	—	2	2	5.25	—
NF	104.5	160.5	116	88	88	103	107	118	177	177	162	2.5	2.5	6.22	6.06
—	91.5	113.5	95.9	85	86.5	90	94	97	118.5	120	114.5	1	1	0.98	0.965
NF	95.3	125.3	101.2	89	89	94	97	104	131	131	128	2	2	1.5	1.47
—	95.3	—	101.7	89	—	94	97	104	131	—	—	2	2	1.67	—
—	95.3	125.3	101.2	89	89	94	97	104	131	131	128	2	2	1.93	1.89
—	95.3	—	101.7	89	—	94	97	104	131	—	—	2	2	2.12	—
NF	103	147	111.8	91	91	99	105	114	159	159	151	2	2	3.86	3.77
—	101	—	111	91	—	99	105	114	159	—	—	2	2	4.22	—
—	103	147	111.8	91	91	99	105	114	159	159	151	2	2	5.79	5.67
—	101	—	111	91	—	99	105	114	159	—	—	2	2	6.25	—
NF	110	170	122	93	93	109	112	124	187	187	172	2.5	2.5	7.32	7.14
—	96.5	118.5	100.9	90	91.5	95	99	102	123.5	125	119.5	1	1	1.03	1.01
NF	101.8	133.8	108.2	94	94	99	104	110	141	141	137	2	2	1.87	1.83
—	100.5	—	107.7	94	—	99	104	110	141	—	—	2	2	2.11	—
—	101.8	133.8	108.2	94	94	99	104	110	141	141	137	2	2	2.44	2.39
—	100.5	—	107.7	94	—	99	104	110	141	—	—	2	2	2.68	—
NF	108	156	117.5	98	98	106	110	119	167	167	160	2.5	2.5	4.54	4.44
—	108	—	118.4	98	—	106	110	119	167	—	—	2.5	2.5	4.81	—
—	108	156	117.5	98	98	106	110	119	167	167	160	2.5	2.5	6.7	6.57
—	108	—	118.4	98	—	106	110	119	167	—	—	2.5	2.5	7.16	—
—	103	127	107.8	96.5	98	101	106	109	132	133.5	129	1.5	1	1.33	1.31
NF	107	143	114.2	99	99	105	109	116	151	151	146	2	2	2.3	2.25
—	107	—	114.6	99	—	105	109	116	151	—	—	2	2	2.44	—
—	107	143	114.2	99	99	105	109	116	151	151	146	2	2	3.1	3.04
—	107	—	114.6	99	—	105	109	116	151	—	—	2	2	3.33	—
NF	115	165	125	103	103	111	117	127	177	177	169	2.5	2.5	5.3	5.18
—	113.5	—	124.7	103	—	111	117	127	177	—	—	2.5	2.5	5.72	—
—	115	165	125	103	103	111	117	127	177	177	169	2.5	2.5	7.95	7.79
—	113.5	—	124.7	103	—	111	117	127	177	—	—	2.5	2.5	8.56	—
—	108	132	112.8	101.5	103	106	111	114	137	138.5	134	1.5	1	1.4	1.38
NF	113.5	151.5	121	106	106	111	116	123	159	159	155	2	2	2.78	2.72
—	112.5	—	121	106	—	111	116	123	159	—	—	2	2	3.02	—

4) Does not apply to side of the outer ring rib of type **NF** bearings.

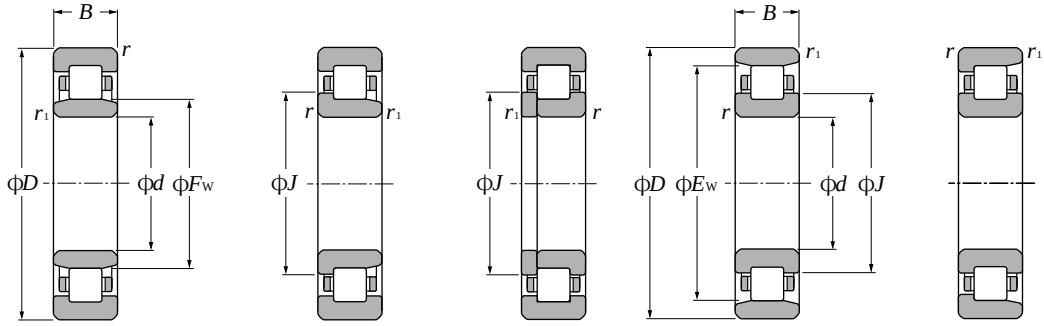

Type NU | Type NJ | Type NUP | Type N | Type NF

d 95～120mm

Boundary dimensions					Basic load ratings				Limiting speeds[1]		Bearing numbers[2]			
					dynamic	static	dynamic	static						
	mm				kN		kgf		min-1		type	type	type	type
d	D	B	$r_{s\,min}$[3]	$r_{1s\,min}$[3]	C_r	C_{or}	C_r	C_{or}	grease	oil	NU	NJ	NUP	N
95	170	43	2.1	2.1	230	298	23 500	30 500	3 600	4 300	NU2219	NJ	NUP	N
	170	43	2.1	2.1	286	370	29 200	38 000	3 300	3 800	NU2219E	NJ	NUP	—
	200	45	3	3	259	285	26 400	29 500	3 400	4 000	NU319	NJ	NUP	N
	200	45	3	3	335	385	34 000	39 500	3 100	3 600	NU319E	NJ	NUP	—
	200	67	3	3	370	460	38 000	47 000	3 000	3 500	NU2319	NJ	NUP	N
	200	67	3	3	460	585	47 000	59 500	2 700	3 200	NU2319E	NJ	NUP	—
100	150	24	1.5	1.1	93.0	126	9 500	12 800	4 600	5 400	NU1020	NJ	NUP	N
	180	34	2.1	2.1	183	217	18 600	22 200	3 800	4 500	NU220	NJ	NUP	N
	180	34	2.1	2.1	249	305	25 400	31 000	3 500	4 100	NU220E	NJ	NUP	—
	180	46	2.1	2.1	258	340	26 300	34 500	3 500	4 100	NU2220	NJ	NUP	N
	180	46	2.1	2.1	335	445	34 000	45 500	3 100	3 600	NU2220E	NJ	NUP	—
	215	47	3	3	299	335	30 500	34 500	3 300	3 800	NU320	NJ	NUP	N
	215	47	3	3	380	425	38 500	43 500	2 900	3 500	NU320E	NJ	NUP	—
	215	73	3	3	410	505	42 000	51 500	2 900	3 400	NU2320	NJ	NUP	N
	215	73	3	3	570	715	58 000	73 000	2 600	3 100	NU2320E	NJ	NUP	—
105	160	26	2	1.1	105	142	10 700	14 500	4 300	5 100	NU1021	NJ	NUP	N
	190	36	2.1	2.1	201	241	20 500	24 600	3 600	4 300	NU221	NJ	NUP	N
	225	49	3	3	320	360	32 500	36 500	3 100	3 700	NU321	NJ	NUP	N
110	170	28	2	1.1	131	174	13 400	17 700	4 100	4 800	NU1022	NJ	NUP	N
	200	38	2.1	2.1	240	290	24 500	29 500	3 400	4 000	NU222	NJ	NUP	N
	200	38	2.1	2.1	293	365	29 800	37 000	3 100	3 700	NU222E	NJ	NUP	—
	200	53	2.1	2.1	320	415	32 500	42 000	3 100	3 700	NU2222	NJ	NUP	N
	200	53	2.1	2.1	385	515	39 000	52 500	2 800	3 300	NU2222E	NJ	NUP	—
	240	50	3	3	360	400	36 500	41 000	3 000	3 500	NU322	NJ	NUP	N
	240	50	3	3	450	525	46 000	53 500	2 700	3 100	NU322E	NJ	NUP	—
	240	80	3	3	605	790	61 500	80 500	2 600	3 100	NU2322	NJ	NUP	N
	240	80	3	3	675	880	69 000	89 500	2 400	2 800	NU2322E	NJ	NUP	—
120	180	28	2	1.1	139	191	14 100	19 500	3 800	4 400	NU1024	NJ	NUP	N
	215	40	2.1	2.1	260	320	26 500	32 500	3 200	3 700	NU224	NJ	NUP	N
	215	40	2.1	2.1	335	420	34 000	43 000	2 900	3 400	NU224E	NJ	NUP	—
	215	58	2.1	2.1	350	460	35 500	47 000	2 900	3 400	NU2224	NJ	NUP	N
	215	58	2.1	2.1	450	620	46 000	63 000	2 600	3 000	NU2224E	NJ	NUP	—
	260	55	3	3	450	510	46 000	52 000	2 700	3 200	NU324	NJ	NUP	N

1) This value achieved with machined cages; when pressed cages are used, 80% of this value is acceptable.
2) Production switched to E type only for bearing number for which there is no standard form.
3) Minimal allowable dimension for chamfer dimension r or r_1.

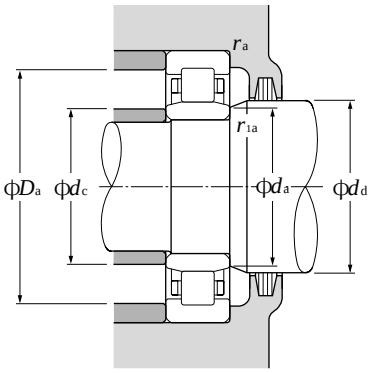

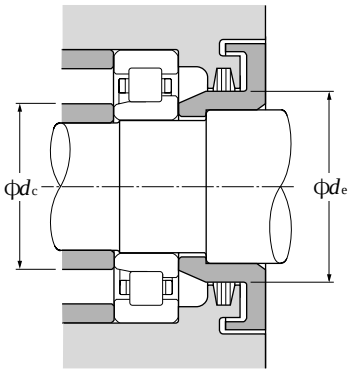

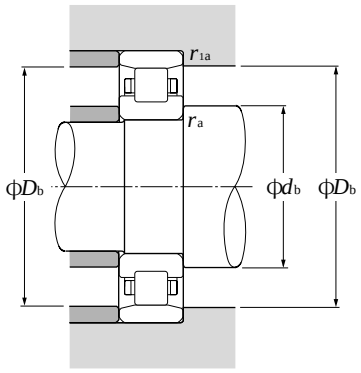

Dynamic equivalent radial load
$P_r = F_r$

Static equivalent radial load
$P_{or} = F_r$

Dimensions				Abutment and fillet dimensions										Mass	
mm				mm										kg	
type NF	F_w	E_w	J	d_a min	d_b min	d_c max	d_d min	d_e min	D_a max	D_b max	D_b min[4]	r_{as} max	r_{1as} max	type NU (approx.)	type N (approx.)
—	113.5	151.5	121	106	106	111	116	123	159	159	155	2	2	3.79	3.71
—	112.5	—	121	106	—	111	116	123	159	—	—	2	2	4.14	—
NF	121.5	173.5	132	108	108	119	124	134	187	187	178	2.5	2.5	6.13	5.99
—	121.5	—	132.7	108	—	119	124	134	187	—	—	2.5	2.5	6.62	—
—	121.5	173.5	132	108	108	119	124	134	187	187	178	2.5	2.5	9.2	9.02
—	121.5	—	132.7	108	—	119	124	134	187	—	—	2.5	2.5	9.8	—
—	113	137	117.8	106.5	108	111	116	119	142	143.5	139	1.5	1	1.45	1.43
NF	120	160	128	111	111	117	122	130	169	169	164	2	2	3.33	3.26
—	119	—	128	111	—	117	122	130	169	—	—	2	2	3.66	—
—	120	160	128	111	111	117	122	130	169	169	164	2	2	4.57	4.48
—	119	—	128	111	—	117	122	130	169	—	—	2	2	5.01	—
NF	129.5	185.5	140.5	113	113	125	132	143	202	202	190	2.5	2.5	7.49	7.32
—	127.5	—	140.3	113	—	125	132	143	202	—	—	2.5	2.5	8.57	—
—	129.5	185.5	140.5	113	113	125	132	143	202	202	190	2.5	2.5	11.7	11.5
—	127.5	—	140.3	113	—	125	132	143	202	—	—	2.5	2.5	12.8	—
—	119.5	145.5	124.7	111.5	114	118	122	126	151	153.5	147.5	2	1	1.84	1.81
NF	126.8	168.8	135	116	116	124	129	137	179	179	173	2	2	3.95	3.87
NF	135	195	147	118	118	132	137	149	212	212	199	2.5	2.5	8.53	8.33
—	125	155	131	116.5	119	124	128	132	161	163.5	157	2	1	2.33	2.3
NF	132.5	178.5	141.5	121	121	130	135	144	189	189	182	2	2	4.63	4.54
—	132.5	—	142.1	121	—	130	135	144	189	—	—	2	2	4.27	—
—	132.5	178.5	141.5	121	121	130	135	144	189	189	182	2	2	6.56	6.43
—	132.5	—	142.1	121	—	130	135	144	189	—	—	2	2	7.4	—
NF	143	207	155.5	123	123	140	145	158	227	227	211	2.5	2.5	10	9.77
—	143	—	156.6	123	—	140	145	158	227	—	—	2.5	2.5	11.1	—
—	143	207	155.5	123	123	140	145	158	227	227	211	2.5	2.5	17.1	16.8
—	143	—	156.6	123	—	140	145	158	227	—	—	2.5	2.5	19.4	—
—	135	165	141	126.5	129	134	138	142	171	173.5	167	2	1	2.44	2.4
NF	143.5	191.5	153	131	131	141	146	156	204	204	196	2	2	5.57	5.46
—	143.5	—	153.9	131	—	141	146	156	204	—	—	2	2	5.97	—
—	143.5	191.5	153	131	131	141	146	156	204	204	196	2	2	8.19	8.03
—	143.5	—	153.9	131	—	141	146	156	204	—	—	2	2	9.18	—
NF	154	226	168.5	133	133	151	156	171	247	247	230	2.5	2.5	12.8	12.5

4) Does not apply to side of the outer ring rib of type **NF** bearings.

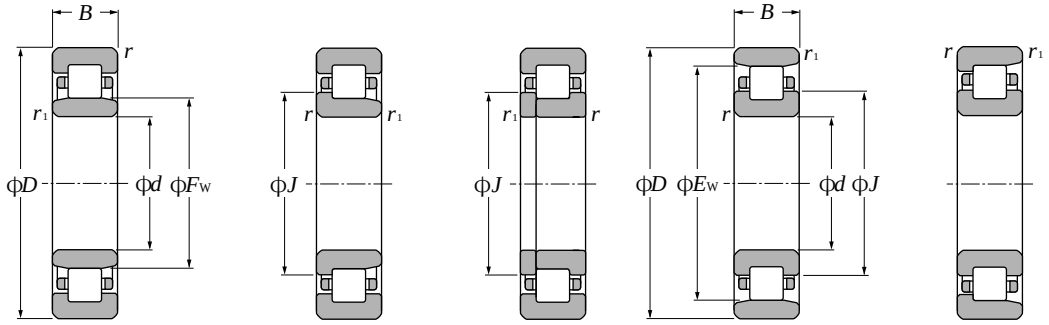

Type NU | Type NJ | Type NUP | Type N | Type NF

d 120～160mm

Boundary dimensions					Basic load ratings				Limiting speeds[1]		Bearing numbers[2]			
					dynamic	static	dynamic	static						
	mm				kN		kgf		min^{-1}		type	type	type	type
d	D	B	$r_{s\,min}$[3]	$r_{1s\,min}$[3]	C_r	C_{or}	C_r	C_{or}	grease	oil	NU	NJ	NUP	N
120	260	55	3	3	530	610	54 000	62 000	2 400	2 800	NU324E	NJ	NUP	—
	260	86	3	3	710	920	72 500	93 500	2 400	2 800	NU2324	NJ	NUP	N
	260	86	3	3	795	1 030	81 000	105 000	2 200	2 500	NU2324E	NJ	NUP	—
130	200	33	2	1.1	172	238	17 500	24 200	3 400	4 000	NU1026	NJ	NUP	N
	230	40	3	3	270	340	27 600	35 000	2 900	3 400	NU226	NJ	NUP	N
	230	40	3	3	365	455	37 000	46 000	2 600	3 100	NU226E	NJ	NUP	—
	230	64	3	3	380	530	38 500	54 000	2 600	3 100	NU2226	NJ	NUP	N
	230	64	3	3	530	735	54 000	75 000	2 300	2 700	NU2226E	NJ	NUP	—
	280	58	4	4	560	665	57 000	68 000	2 500	2 900	NU326	NJ	NUP	N
	280	58	4	4	615	735	63 000	75 000	2 200	2 600	NU326E	NJ	NUP	—
	280	93	4	4	840	1 130	85 500	115 000	2 200	2 600	NU2326	NJ	NUP	N
	280	93	4	4	920	1 230	94 000	126 000	2 000	2 300	NU2326E	NJ	NUP	—
140	210	33	2	1.1	176	250	17 900	25 500	3 200	3 800	NU1028	NJ	NUP	N
	250	42	3	3	310	400	31 500	40 500	2 700	3 100	NU228	NJ	NUP	N
	250	42	3	3	395	515	40 000	52 500	2 400	2 800	NU228E	NJ	NUP	—
	250	68	3	3	445	635	45 500	64 500	2 400	2 800	NU2228	NJ	NUP	N
	250	68	3	3	575	835	58 500	85 000	2 100	2 500	NU2228E	NJ	NUP	—
	300	62	4	4	615	745	63 000	76 000	2 300	2 700	NU328	NJ	NUP	N
	300	62	4	4	665	795	67 500	81 500	2 100	2 400	NU328E	NJ	NUP	—
	300	102	4	4	920	1 250	94 000	127 000	2 000	2 300	NU2328	NJ	NUP	N
	300	102	4	4	1 020	1 380	104 000	141 000	1 800	2 100	NU2328E	NJ	NUP	—
150	225	35	2.1	1.5	202	294	20 600	29 900	3 000	3 500	NU1030	NJ	NUP	N
	270	45	3	3	345	435	35 000	44 500	2 500	2 900	NU230	NJ	NUP	N
	270	45	3	3	450	595	45 500	60 500	2 200	2 600	NU230E	NJ	NUP	—
	270	73	3	3	500	710	51 000	72 500	2 200	2 600	NU2230	NJ	NUP	N
	270	73	3	3	660	980	67 500	100 000	2 000	2 400	NU2230E	NJ	NUP	—
	320	65	4	4	665	805	67 500	82 500	2 100	2 500	NU330	NJ	NUP	N
	320	65	4	4	760	920	77 500	94 000	1 900	2 300	NU330E	NJ	NUP	—
	320	108	4	4	1 020	1 400	104 000	143 000	1 900	2 200	NU2330	NJ	NUP	N
	320	108	4	4	1 160	1 600	118 000	163 000	1 700	2 000	NU2330E	NJ	NUP	—
160	240	38	2.1	1.5	238	340	24 200	35 000	2 800	3 300	NU1032	NJ	NUP	N
	290	48	3	3	430	570	43 500	58 000	2 300	2 700	NU232	NJ	NUP	N
	290	48	3	3	500	665	51 000	68 000	2 100	2 400	NU232E	NJ	NUP	—

1) This value achieved with machined cages; when pressed cages are used, 80% of this value is acceptable.
2) Production switched to E type only for bearing number for which there is no standard form.
3) Minimal allowable dimension for chamfer dimension r or r_1.

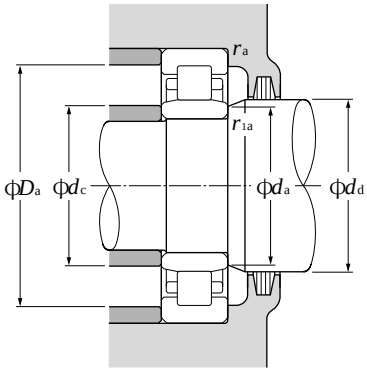

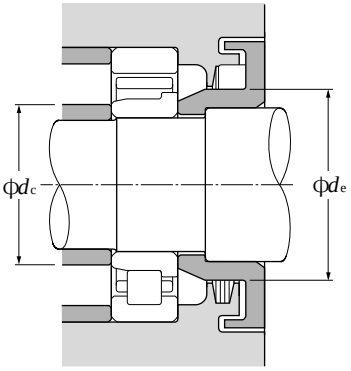

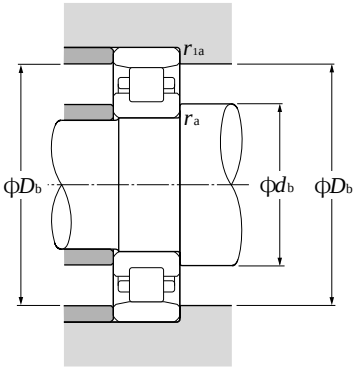

Dynamic equivalent radial load
$P_r = F_r$

Static equivalent radial load
$P_{or} = F_r$

Dimensions				Abutment and fillet dimensions										Mass	
	mm			mm										kg	
type NF	F_w	E_w	J	d_a min	d_b min	d_c max	d_d min	d_e min	D_a max	D_b max	D_b min[4]	r_{as} max	r_{1as} max	type NU (approx.)	type N (approx.)
—	154	—	169.2	133	—	151	156	171	247	—	—	2.5	2.5	13.9	—
—	154	226	168.5	133	133	151	156	171	247	247	230	2.5	2.5	21.5	21.1
—	154	—	169.2	133	—	151	156	171	247	—	—	2.5	2.5	26.1	—
—	148	182	154.8	136.5	139	146	151	156	191	193.5	184	2	1	3.69	3.63
NF	156	204	165.5	143	143	151	158	168	217	217	208	2.5	2.5	6.3	6.17
—	153.5	—	164.7	143	—	151	158	168	217	—	—	2.5	2.5	6.9	—
—	156	204	165.5	143	143	151	158	168	217	217	208	2.5	2.5	10.2	10
—	153.5	—	164.7	143	—	151	158	168	217	—	—	2.5	2.5	11.8	—
NF	167	243	182	146	146	164	169	184	264	264	247	3	3	17.4	17
—	167	—	183	146	—	164	169	184	264	—	—	3	3	19.4	—
—	167	243	182	146	146	164	169	184	264	264	247	3	3	26.9	26.4
—	167	—	183	146	—	164	169	184	264	—	—	3	3	30.9	—
—	158	192	164.8	146.5	149	156	161	166	201	203.5	194	2	1	4.05	3.98
NF	169	221	179.5	153	153	166	171	182	237	237	225	2.5	2.5	7.88	7.72
—	169	—	180.2	153	—	166	171	182	237	—	—	2.5	2.5	8.73	—
—	169	221	179.5	153	153	166	171	182	237	237	225	2.5	2.5	12.9	12.6
—	169	—	180.2	153	—	166	171	182	237	—	—	2.5	2.5	15.8	—
NF	180	260	196	156	156	176	182	198	284	284	265	3	3	21.2	20.7
—	180	—	196.8	156	—	176	182	198	284	—	—	3	3	23.2	—
—	180	260	196	156	156	176	182	198	284	284	265	3	3	33.8	33.1
—	180	—	196.8	156	—	176	182	198	284	—	—	3	3	38.7	—
—	169.5	205.5	176.7	158	161	167	173	178	214	217	207.5	2	1.5	4.77	4.7
NF	182	238	193	163	163	179	184	196	257	257	242	2.5	2.5	9.92	9.72
—	182	—	194	163	—	179	184	196	257	—	—	2.5	2.5	11	—
—	182	238	193	163	163	179	184	196	257	257	242	2.5	2.5	16.3	16
—	182	—	194	163	—	179	184	196	257	—	—	2.5	2.5	19.7	—
NF	193	277	210	166	166	190	195	213	304	304	282	3	3	25.3	24.7
—	193	—	211	166	—	190	195	213	304	—	—	3	3	28.4	—
—	193	277	210	166	166	190	195	213	304	304	282	3	3	40.6	39.8
—	193	—	211	166	—	190	195	213	304	—	—	3	3	47.2	—
—	180	220	188	168	171	178	184	189	229	232	222	2	1.5	5.9	5.81
NF	195	255	207	173	173	192	197	210	277	277	259	2.5	2.5	13.7	13.4
—	195	—	207.8	173	—	192	197	210	277	—	—	2.5	2.5	15.6	—

4) Does not apply to side of the outer ring rib of type **NF** bearings.

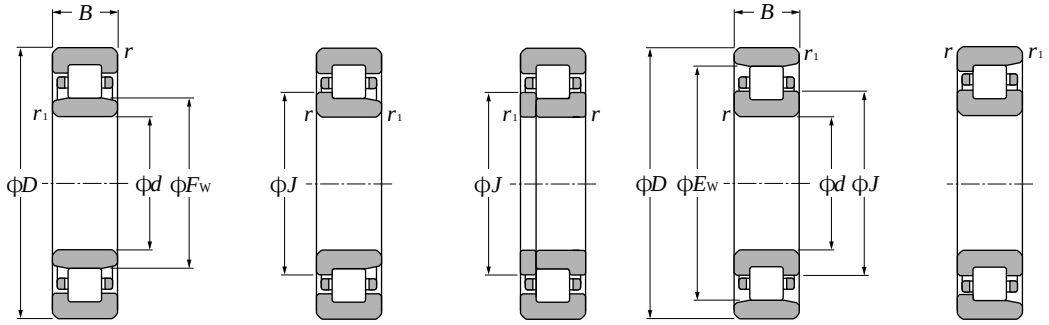

Type NU | Type NJ | Type NUP | Type N | Type NF

d 160～200mm

Boundary dimensions					Basic load ratings				Limiting speeds[1]		Bearing numbers[2]			
					dynamic	static	dynamic	static						
	mm				kN		kgf		min-1		type	type	type	type
d	D	B	$r_{s\,min}$[3]	$r_{1s\,min}$[3]	C_r	C_{or}	C_r	C_{or}	grease	oil	NU	NJ	NUP	N
160	290	80	3	3	630	940	64 500	96 000	2 100	2 400	NU2232	NJ	NUP	N
	290	80	3	3	810	1 190	82 500	121 000	1 900	2 200	NU2232E	NJ	NUP	—
	340	68	4	4	700	875	71 000	89 500	2 000	2 300	NU332	NJ	NUP	N
	340	68	4	4	860	1 050	87 500	107 000	1 800	2 100	NU332E	NJ	NUP	—
	340	114	4	4	1 070	1 520	109 000	155 000	1 700	2 000	NU2332	NJ	NUP	N
	340	114	4	4	1 310	1 820	134 000	186 000	1 600	1 900	NU2332E	NJ	NUP	—
170	260	42	2.1	2.1	278	400	28 300	41 000	2 600	3 000	NU1034	NJ	NUP	N
	310	52	4	4	475	635	48 500	65 000	2 200	2 500	NU234	NJ	NUP	N
	310	52	4	4	605	800	61 500	81 500	2 000	2 300	NU234E	NJ	NUP	—
	310	86	4	4	715	1 080	73 000	110 000	2 000	2 300	NU2234	NJ	NUP	N
	310	86	4	4	965	1 410	98 500	144 000	1 800	2 100	NU2234E	NJ	NUP	—
	360	72	4	4	795	1 010	81 500	103 000	1 800	2 200	NU334	NJ	NUP	N
	360	120	4	4	1 220	1 750	125 000	179 000	1 600	1 900	NU2334	NJ	NUP	N
180	280	46	2.1	2.1	340	485	35 000	49 500	2 400	2 900	NU1036	NJ	NUP	N
	320	52	4	4	495	675	50 500	69 000	2 000	2 400	NU236	NJ	NUP	N
	320	52	4	4	625	850	64 000	87 000	1 800	2 200	NU236E	NJ	NUP	—
	320	86	4	4	745	1 140	76 000	117 000	1 800	2 200	NU2236	NJ	NUP	N
	320	86	4	4	1 010	1 510	103 000	154 000	1 600	1 900	NU2236E	NJ	NUP	—
	380	75	4	4	905	1 150	92 000	118 000	1 700	2 000	NU336	NJ	NUP	N
	380	126	4	4	1 380	1 990	141 000	203 000	1 500	1 800	NU2336	NJ	NUP	N
190	290	46	2.1	2.1	350	510	36 000	52 000	2 300	2 700	NU1038	NJ	NUP	N
	340	55	4	4	555	770	56 500	78 500	1 900	2 200	NU238	NJ	NUP	N
	340	55	4	4	695	955	71 000	97 500	1 700	2 000	NU238E	NJ	NUP	—
	340	92	4	4	830	1 290	84 500	131 000	1 700	2 000	NU2238	NJ	NUP	N
	340	92	4	4	1 100	1 670	113 000	170 000	1 500	1 800	NU2238E	NJ	NUP	—
	400	78	5	5	975	1 260	99 500	129 000	1 600	1 900	NU338	NJ	NUP	N
	400	132	5	5	1 520	2 220	155 000	226 000	1 400	1 700	NU2338	NJ	NUP	N
200	310	51	2.1	2.1	390	580	40 000	59 500	2 200	2 600	NU1040	NJ	NUP	N
	360	58	4	4	620	865	63 500	88 500	1 800	2 100	NU240	NJ	NUP	N
	360	58	4	4	765	1 060	78 000	108 000	1 600	1 900	NU240E	NJ	NUP	—
	360	98	4	4	925	1 440	94 000	147 000	1 600	1 900	NU2240	NJ	NUP	N
	360	98	4	4	1 220	1 870	125 000	191 000	1 500	1 700	NU2240E	NJ	NUP	—
	420	80	5	5	975	1 270	99 500	130 000	1 500	1 800	NU340	NJ	NUP	N

1) This value achieved with machined cages; when pressed cages are used, 80% of this value is acceptable.
2) Production switched to E type only for bearing number for which there is no standard form.
3) Minimal allowable dimension for chamfer dimension r or r_1.

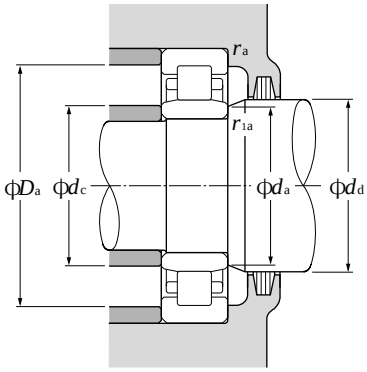

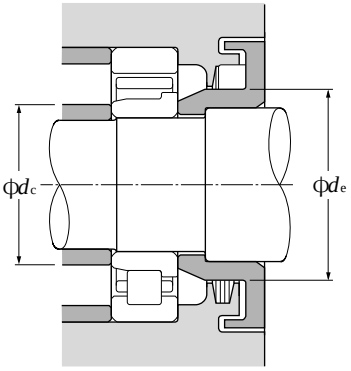

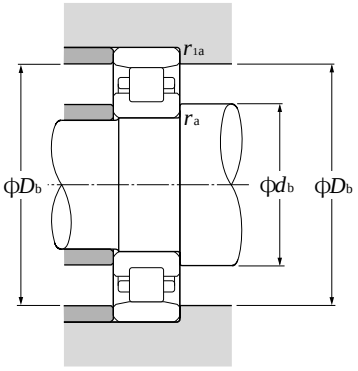

Dynamic equivalent radial load
$P_r = F_r$

Static equivalent radial load
$P_{or} = F_r$

Dimensions				Abutment and fillet dimensions										Mass	
	mm			mm										kg	
type NF	F_w	E_w	J	d_a min	d_b min	d_c max	d_d min	d_e min	D_a max	D_b max	D_b min[4]	r_{as} max	r_{1as} max	type NU (approx.)	type N (approx.)
—	195	255	207	173	173	192	197	210	277	277	259	2.5	2.5	22	21.6
—	193	—	206.6	173	—	192	197	210	277	—	—	2.5	2.5	25.1	—
NF	208	292	225	176	176	200	211	228	324	324	297	3	3	31.3	30.6
—	204	—	223.2	176	—	200	211	228	324	—	—	3	3	34	—
—	208	292	225	176	176	200	211	228	324	324	297	3	3	50.5	49.5
—	204	—	223.2	176	—	200	211	228	324	—	—	3	3	56	—
—	193	237	201.8	181	181	190	197	203	249	249	239	2	2	7.88	7.76
NF	208	272	220.5	186	186	204	211	223	294	294	277	3	3	17	16.7
—	207	—	221.4	186	—	204	211	223	294	—	—	3	3	19.6	—
—	208	272	220.5	186	186	204	211	223	294	294	277	3	3	27.2	26.7
—	205	—	220.2	186	—	204	211	223	294	—	—	3	3	31	—
NF	220	310	238	186	186	216	223	241	344	344	315	3	3	37	36.1
—	220	310	238	186	186	216	223	241	344	344	315	3	3	59.5	58.3
—	205	255	215	191	191	203	209	216	269	269	257	2	2	10.3	10.1
NF	218	282	230.5	196	196	214	221	233	304	304	287	3	3	17.7	17.3
—	217	—	231.4	196	—	214	221	233	304	—	—	3	3	20.4	—
—	218	282	230.5	196	196	214	221	233	304	304	287	3	3	28.4	27.8
—	215	—	230.2	196	—	214	221	233	304	—	—	3	3	31.9	—
NF	232	328	252	196	196	227	235	255	364	364	333	3	3	44.2	43.2
—	232	328	252	196	196	227	235	255	364	364	333	3	3	69.5	68.1
—	215	265	225	201	201	213	219	226	279	279	267	2	2	10.7	10.5
NF	231	299	244.5	206	206	227	234	247	324	324	304	3	3	21.3	20.8
—	230	—	245.2	206	—	227	234	247	324	—	—	3	3	24.2	—
—	231	299	244.5	206	206	227	234	247	324	324	304	3	3	34.4	33.7
—	228	—	244	206	—	227	234	247	324	—	—	3	3	39.5	—
NF	245	345	265	210	210	240	248	268	380	380	351	4	4	49.4	48.3
—	245	345	265	210	210	240	248	268	380	380	351	4	4	80.5	78.9
—	229	281	239.4	211	211	226	233	241	299	299	283	2	2	13.9	13.7
NF	244	316	258	216	216	240	247	261	344	344	321	3	3	25.3	24.8
—	243	—	259	216	—	240	247	261	344	—	—	3	3	28.1	—
—	244	316	258	216	216	240	247	261	344	344	321	3	3	41.3	40.5
—	241	—	257.8	216	—	240	247	261	344	—	—	3	3	47.8	
NF	260	360	280	220	220	254	263	283	400	400	366	4	4	55.8	54.5

4) Does not apply to side of the outer ring rib of type **NF** bearings.

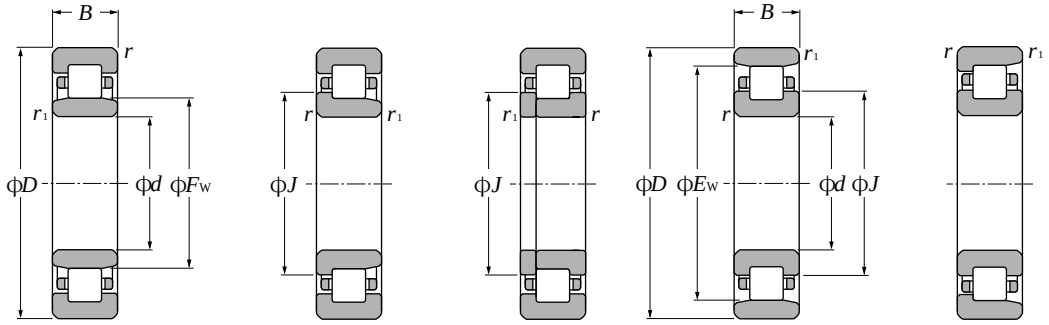

Type NU | Type NJ | Type NUP | Type N | Type NF

d 200～360mm

Boundary dimensions					Basic load ratings				Limiting speeds[1]		Bearing numbers[2]			
					dynamic	static	dynamic	static						
	mm				kN		kgf		min-1		type	type	type	type
d	D	B	$r_{s\,min}$[3]	$r_{1s\,min}$[3]	Cr	Cor	Cr	Cor	grease	oil	NU	NJ	NUP	N
200	420	138	5	5	1 510	2 240	154 000	229 000	1 400	1 600	NU2340	NJ	NUP	N
220	340	56	3	3	500	750	51 000	76 500	2 000	2 300	NU1044	NJ	NUP	N
	400	65	4	4	760	1 080	77 500	110 000	1 600	1 900	NU244	NJ	NUP	N
	400	108	4	4	1 140	1 810	116 000	184 000	1 500	1 700	NU2244	NJ	NUP	N
	460	88	5	5	1 190	1 570	122 000	161 000	1 400	1 600	NU344	NJ	NUP	N
	460	145	5	5	1 780	2 620	181 000	268 000	1 200	1 400	NU2344	NJ	NUP	N
240	360	56	3	3	530	820	54 000	83 500	1 800	2 100	NU1048	NJ	NUP	N
	440	72	4	4	935	1 340	95 500	136 000	1 500	1 700	NU248	NJ	NUP	N
	440	120	4	4	1 440	2 320	146 000	236 000	1 300	1 600	NU2248	NJ	NUP	N
	500	95	5	5	1 430	1 950	146 000	198 000	1 300	1 500	NU348	NJ	NUP	N
	500	155	5	5	2 100	3 200	214 000	325 000	1 100	1 300	NU2348	NJ	NUP	N
260	400	65	4	4	645	1 000	65 500	102 000	1 600	1 900	NU1052	NJ	NUP	N
	480	80	5	5	1 150	1 660	117 000	170 000	1 300	1 600	NU252	NJ	NUP	N
	480	130	5	5	1 780	2 930	182 000	299 000	1 200	1 400	NU2252	NJ	NUP	N
	540	102	6	6	1 620	2 230	165 000	228 000	1 200	1 400	NU352	NJ	NUP	N
	540	165	6	6	2 340	3 600	239 000	365 000	1 000	1 200	NU2352	NJ	NUP	N
280	420	65	4	4	660	1 050	67 000	107 000	1 500	1 800	NU1056	NJ	NUP	N
	500	80	5	5	1 190	1 760	121 000	180 000	1 200	1 400	NU256	NJ	NUP	N
	500	130	5	5	1 840	3 100	188 000	315 000	1 100	1 300	NU2256	NJ	NUP	N
	580	108	6	6	1 820	2 540	185 000	259 000	1 100	1 200	NU356	NJ	NUP	N
	580	175	6	6	2 700	4 250	275 000	430 000	920	1 100	NU2356	NJ	NUP	N
300	460	74	4	4	855	1 340	87 000	137 000	1 400	1 600	NU1060	NJ	NUP	N
	540	85	5	5	1 400	2 070	143 000	211 000	1 100	1 300	NU260	NJ	NUP	N
	540	140	5	5	2 180	3 650	223 000	370 000	1 000	1 200	NU2260	NJ	NUP	N
320	480	74	4	4	875	1 410	89 500	143 000	1 300	1 500	NU1064	NJ	NUP	N
	580	92	5	5	1 600	2 390	164 000	244 000	1 000	1 200	NU264	NJ	NUP	N
	580	150	5	5	2 550	4 350	260 000	445 000	950	1 100	NU2264	NJ	NUP	N
340	520	82	5	5	1 050	1 670	107 000	170 000	1 200	1 400	NU1068	NJ	NUP	N
360	540	82	5	5	1 080	1 750	110 000	179 000	1 100	1 300	NU1072	NJ	NUP	N

1) This value achieved with machined cages; when pressed cages are used, 80% of this value is acceptable.
2) Production switched to E type only for bearing number for which there is no standard form.
3) Minimal allowable dimension for chamfer dimension r or r_1.

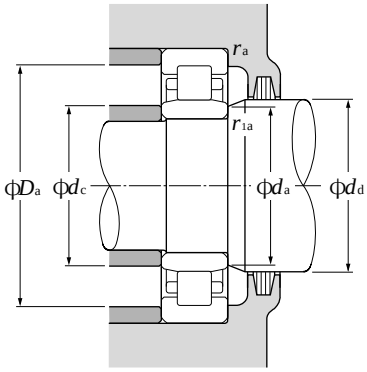

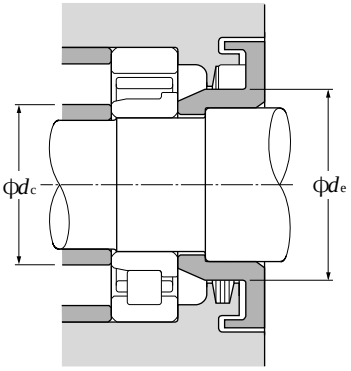

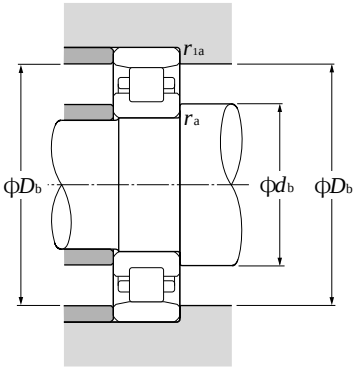

Dynamic equivalent radial load
$P_r = F_r$

Static equivalent radial load
$P_{or} = F_r$

Dimensions				Abutment and fillet dimensions										Mass	
	mm			mm										kg	
type NF	F_w	E_w	J	d_a min	d_b min	d_c max	d_d min	d_e min	D_a max	D_b max	D_b min[4]	r_{as} max	r_{1as} max	type NU (approx.)	type N (approx.)
—	260	360	280	220	220	254	263	283	400	400	366	4	4	92.6	90.7
—	250	310	262	233	233	248	254	264	327	327	313	2.5	2.5	18.2	17.9
NF	270	350	286	236	236	266	273	289	384	384	355	3	3	37.7	37
—	270	350	286	236	236	266	273	289	384	384	355	3	3	59	57.8
NF	284	396	307	240	240	279	287	307	440	440	402	4	4	73.4	71.7
—	284	396	307	240	240	279	287	307	440	440	402	4	4	116	114
—	270	330	282	253	253	268	275	284	347	347	333	2.5	2.5	19.6	19.3
NF	295	385	313	256	256	293	298	316	424	424	390	3	3	50.2	49.2
—	295	385	313	256	256	293	298	316	424	424	390	3	3	80	78.4
NF	310	430	335	260	260	305	313	333	480	480	436	4	4	93.4	91.3
—	310	430	335	260	260	305	313	333	480	480	436	4	4	147	144
—	296	364	309.6	276	276	292	300	312	384	384	367	3	3	29.1	28.7
NF	320	420	340	280	280	318	323	343	460	460	426	4	4	66.9	65.6
—	320	420	340	280	280	318	323	343	460	460	426	4	4	104	102
NF	336	464	362	284	284	331	339	359	516	516	471	5	5	117	114
—	336	464	362	284	284	331	339	359	516	516	471	5	5	182	178
—	316	384	329.6	296	296	312	320	332	404	404	387	3	3	30.9	30.4
NF	340	440	360	300	300	336	343	365	480	480	446	4	4	70.8	69.4
—	340	440	360	300	300	336	343	365	480	480	446	4	4	109	107
NF	362	498	390	304	304	356	366	386	556	556	505	5	5	142	139
—	362	498	390	304	304	356	366	386	556	556	505	5	5	222	218
—	340	420	356	316	316	336	344	358	444	444	423	3	3	43.6	42.9
NF	364	476	387	320	320	361	368	392	520	520	482	4	4	88.2	86.4
—	364	476	387	320	320	361	368	392	520	520	482	4	4	138	135
—	360	440	376	336	336	356	364	378	464	464	443	3	3	46	45.3
NF	390	510	415	340	340	386	393	419	560	560	516	4	4	111	109
—	390	510	415	340	340	386	393	419	560	560	516	4	4	172	168
—	385	475	403	360	360	381	390	405	500	500	479	4	4	61.8	60.8
—	405	495	423	380	380	401	410	425	520	520	499	4	4	64.7	63.7

4) Does not apply to side of the outer ring rib of type **NF** bearings.

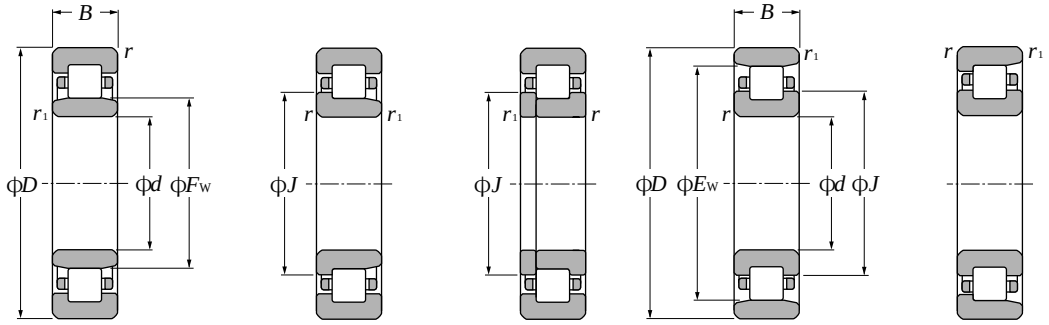

Type NU **Type NJ** **Type NUP** **Type N** **Type NF**

d 380～500mm

Boundary dimensions					Basic load ratings				Limiting speeds[1]		Bearing numbers[2]			
					dynamic	static	dynamic	static						
		mm			kN		kgf		min^{-1}		type	type	type	type
d	*D*	*B*	$r_{s\,min}$[3]	$r_{1s\,min}$[3]	C_r	C_{or}	C_r	C_{or}	grease	oil	NU	NJ	NUP	N
380	560	82	5	5	1 100	1 840	112 000	187 000	1 100	1 200	**NU1076**	**NJ**	**NUP**	**N**
400	600	90	5	5	1 320	2 190	134 000	223 000	990	1 200	**NU1080**	**NJ**	**NUP**	**N**
420	620	90	5	5	1 350	2 290	138 000	233 000	950	1 100	**NU1084**	**NJ**	**NUP**	**N**
440	650	94	6	6	1 430	2 430	146 000	248 000	900	1 100	**NU1088**	**NJ**	**NUP**	**N**
460	680	100	6	6	1 540	2 630	157 000	269 000	850	1 000	**NU1092**	**NJ**	**NUP**	**N**
480	700	100	6	6	1 580	2 750	161 000	280 000	810	960	**NU1096**	**NJ**	**NUP**	**N**
500	720	100	6	6	1 610	2 870	164 000	292 000	770	910	**NU10/500**	**NJ**	**NUP**	**N**

1) This value achieved with machined cages; when pressed cages are used, 80% of this value is acceptable.
2) Production switched to E type only for bearing number for which there is no standard form.
3) Minimal allowable dimension for chamfer dimension r or r_1.

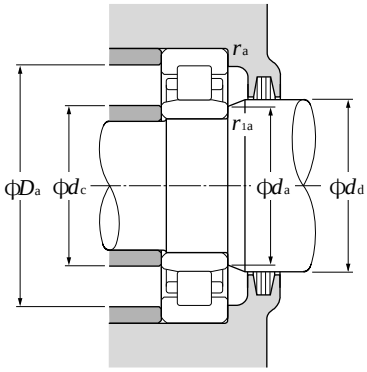

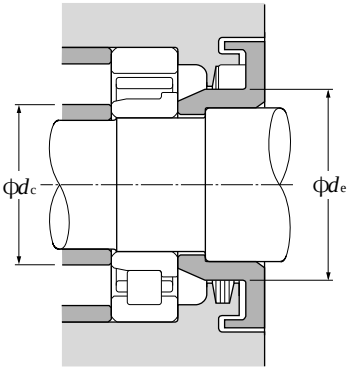

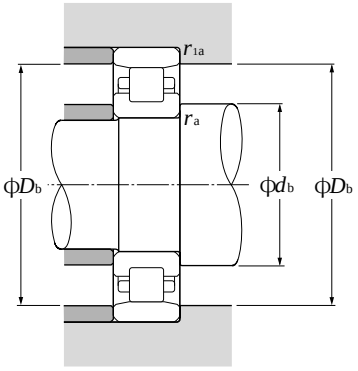

Dynamic equivalent radial load
$P_r = F_r$

Static equivalent radial load
$P_{or} = F_r$

Dimensions				Abutment and fillet dimensions										Mass	
	mm			mm										kg	
type NF	F_w	E_w	J	d_a min	d_b min	d_c max	d_d min	d_e min	D_a max	D_b max	D_b min[4)]	r_{as} max	r_{1as} max	type NU (approx.)	type N (approx.)
—	425	515	443	400	400	421	430	445	540	540	519	4	4	67.5	66.5
—	450	550	470	420	420	446	455	473	580	580	554	4	4	87.6	86.3
—	470	570	490	440	440	466	475	493	600	600	574	4	4	91	89.6
—	493	597	513.8	464	464	488	499	517	626	626	602	5	5	105	103
—	516	624	537.6	484	484	511	522	541	656	656	629	5	5	122	120
—	536	644	557.6	504	504	531	542	561	676	676	649	5	5	126	124
—	556	664	577.6	524	524	551	562	581	696	696	669	5	5	130	128

4) Does not apply to side of the outer ring rib of type **NF** bearings.

L type collar ring

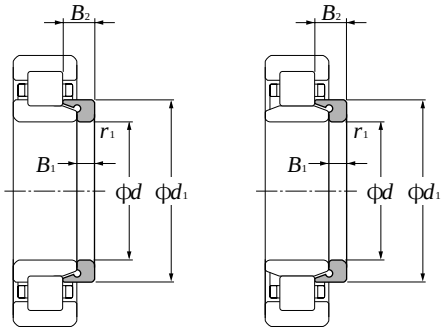

NH＝NJ＋HJ　　NUJ＝NU＋HJ

d 20～60mm

Dimensions mm					Bearing numbers	Mass kg
d	d_1	B_1	B_2	$r_{1s\,min}$ 1)		(approx.)
20	29.9	3	6.75	0.6	**HJ204**	0.012
	29.5	3	5.5	0.6	**HJ204E**	0.009
	29.9	3	7.5	0.6	**HJ2204**	0.013
	29.5	3	6.5	0.6	**HJ2204E**	0.01
	31.8	4	7.5	0.6	**HJ304**	0.017
	31.1	4	6.5	0.6	**HJ304E**	0.014
	31.8	4	8.5	0.6	**HJ2304**	0.018
	31.1	4	7.5	0.6	**HJ2304E**	0.015
25	34.8	3	7.25	0.6	**HJ205**	0.015
	34.5	3	6.	0.6	**HJ205E**	0.012
	34.8	3	7.5	0.6	**HJ2205**	0.015
	34.5	3	6.5	0.6	**HJ2205E**	0.013
	39	4	8	1.1	**HJ305**	0.025
	38	4	7	1.1	**HJ305E**	0.021
	39	4	9	1.1	**HJ2305**	0.027
	38	4	8	1.1	**HJ2305E**	0.024
	43.6	6	10.5	1.5	**HJ405**	0.057
30	41.7	4	8.25	0.6	**HJ206**	0.025
	41.1	4	7	0.6	**HJ206E**	0.017
	41.7	4	8.5	0.6	**HJ2206**	0.025
	41.1	4	7.5	0.6	**HJ2206E**	0.02
	45.9	5	9.5	1.1	**HJ306**	0.039
	44.9	5	8.5	1.1	**HJ306E**	0.035
	45.9	5	11.5	1.1	**HJ2306**	0.043
	44.9	5	9.5	1.1	**HJ2306E**	0.035
	50.5	7	11.5	1.5	**HJ406**	0.08
35	47.6	4	8	0.6	**HJ207**	0.03
	48	4	7	0.6	**HJ207E**	0.027
	47.6	4	8.5	0.6	**HJ2207**	0.031
	48	4	8.5	0.6	**HJ2207E**	0.031
	50.8	6	11	1.1	**HJ307**	0.056
	51	6	9.5	1.1	**HJ307E**	0.048
	50.8	6	14	1.1	**HJ2307**	0.064
	51	6	11	1.1	**HJ2307E**	0.055
	59	8	13	1.5	**HJ407**	0.12

Dimensions mm					Bearing numbers	Mass kg
d	d_1	B_1	B_2	$r_{1s\,min}$ 1)		(approx.)
40	54.2	5	9	1.1	**HJ208**	0.046
	53.9	5	8.5	1.1	**HJ208E**	0.042
	54.2	5	9.5	1.1	**HJ2208**	0.047
	53.9	5	9	1.1	**HJ2208E**	0.045
	58.4	7	12.5	1.5	**HJ308**	0.083
	57.6	7	11	1.5	**HJ308E**	0.07
	58.4	7	14.5	1.5	**HJ2308**	0.09
	57.6	7	12.5	1.5	**HJ2308E**	0.08
	64.8	8	13	2	**HJ408**	0.14
45	59	5	9.5	1.1	∗ **HJ209**	0.053
	58.9	5	8.5	1.1	**HJ209E**	0.047
	58.9	5	9	1.1	**HJ2209E**	0.05
	64	7	12.5	1.5	**HJ309**	0.099
	64.5	7	11.5	1.5	**HJ309E**	0.093
	64	7	15	1.5	**HJ2309**	0.109
	64.5	7	13	1.5	**HJ2309E**	0.103
	71.8	8	13.5	2	**HJ409**	0.175
50	64.6	5	10	1.1	**HJ210**	0.063
	63.9	5	9	1.1	∗ **HJ210E**	0.055
	64.6	5	9.5	1.1	**HJ2210**	0.061
	71	8	14	2	**HJ310**	0.142
	71.4	8	13	2	**HJ310E**	0.134
	71	8	17	2	**HJ2310**	0.157
	71.4	8	14.5	2	**HJ2310E**	0.15
	78.8	9	14.5	2.1	**HJ410**	0.23
55	70.8	6	11	1.1	∗ **HJ211**	0.084
	70.8	6	9.5	1.1	**HJ211E**	0.072
	70.8	6	10	1.1	**HJ2211E**	0.076
	77.2	9	15	2	**HJ311**	0.182
	77.7	9	14	2	**HJ311E**	0.168
	77.2	9	18.5	2	**HJ2311**	0.203
	77.7	9	15.5	2	**HJ2311E**	0.185
	85.2	10	16.5	2.1	**HJ411**	0.29
60	78.4	6	11	1.5	∗ **HJ212**	0.108
	77.6	6	10	1.5	∗ **HJ212E**	0.094

1) Minimal allowable dimension for chamfer dimension r.　Note: 1. This L type collar ring is used with **NU** type cylindrical roller bearings; in duplex arrangements with **NJ** or **NU** type bearing numbers, they become **NH** type and **NUJ** type respectively. For bearing dimensions, allowable rotations, and mass, please refer to pages **B-94** to **B-98**.　2. " ∗ " indicates L type collar rings that can also be used with dimension series **22** bearings.

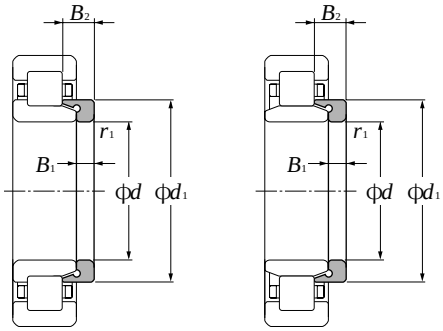

NH＝NJ＋HJ　　NUJ＝NU＋HJ

d 60～105mm

Dimensions mm					Bearing numbers	Mass kg
d	d_1	B_1	B_2	$r_{1s\ min}$ 1)		(approx.)
60	84.2	9	15.5	2.1	HJ312	0.22
	84.6	9	14.5	2.1	HJ312E	0.205
	84.2	9	19	2.1	HJ2312	0.245
	84.6	9	16	2.1	HJ2312E	0.23
	91.8	10	16.5	2.1	HJ412	0.34
65	84.8	6	11	1.5	HJ213	0.123
	84.5	6	10	1.5	HJ213E	0.111
	84.8	6	11.5	1.5	HJ2213	0.126
	84.5	6	10.5	1.5	HJ2213E	0.118
	91	10	17	2.1	HJ313	0.28
	91	10	15.5	2.1	HJ313E	0.25
	91	10	20	2.1	HJ2313	0.304
	91	10	18	2.1	HJ2313E	0.29
	98.5	11	18	2.1	HJ413	0.42
70	89.6	7	12.5	1.5	∗ HJ214	0.15
	89.5	7	11	1.5	HJ214E	0.13
	89.5	7	11.5	1.5	HJ2214E	0.138
	98	10	17.5	2.1	HJ314	0.33
	98	10	15.5	2.1	HJ314E	0.293
	98	10	20.5	2.1	HJ2314	0.358
	98	10	18.5	2.1	HJ2314E	0.35
	110.5	12	20	3	HJ414	0.605
75	94	7	12.5	1.5	∗ HJ215	0.156
	94.5	7	11	1.5	HJ215E	0.141
	94.5	7	11.5	1.5	HJ2215E	0.164
	104.2	11	18.5	2.1	HJ315	0.4
	104.6	11	16.5	2.1	HJ315E	0.35
	104.2	11	21.5	2.1	HJ2315	0.432
	104.6	11	19.5	2.1	HJ2315E	0.41
	116.0	13	21.5	3	HJ415	0.71
80	101.2	8	13.5	2	∗ HJ216	0.207
	101.7	8	12.5	2	∗ HJ216E	0.193
	111.8	11	19.5	2.1	HJ316	0.47
	111	11	17	2.1	HJ316E	0.405
	111.8	11	23	2.1	HJ2316	0.511

Dimensions mm					Bearing numbers	Mass kg
d	d_1	B_1	B_2	$r_{1s\ min}$ 1)		(approx.)
80	111	11	20	2.1	HJ2316E	0.45
	122	13	22	3	HJ416	0.78
85	108.2	8	14	2	∗ HJ217	0.25
	107.7	8	12.5	2	HJ217E	0.21
	107.7	8	13	2	HJ2217E	0.216
	117.5	12	20.5	3	HJ317	0.56
	118.4	12	18.5	3	HJ317E	0.505
	117.5	12	24	3	HJ2317	0.606
	118.4	12	22	3	HJ2317E	0.55
90	114.2	9	15	2	HJ218	0.305
	114.6	9	14	2	HJ218E	0.272
	114.2	9	16	2	HJ2218	0.315
	114.6	9	15	2	HJ2218E	0.308
	125	12	21	3	HJ318	0.63
	124.7	12	18.5	3	HJ318E	0.548
	125	12	26	3	HJ2318	0.704
	124.7	12	22	3	HJ2318E	0.69
95	121	9	15.5	2.1	HJ219	0.352
	121	9	14.0	2.1	HJ219E	0.304
	121	9	16.5	2.1	HJ2219	0.363
	121	9	15.5	2.1	HJ2219E	0.335
	132	13	22.5	3	HJ319	0.76
	132.7	13	20.5	3	HJ319E	0.7
	132	13	26.5	3	HJ2319	0.826
	132.7	13	24.5	3	HJ2319E	0.8
100	128	10	17	2.1	HJ220	0.444
	128	10	15	2.1	HJ220E	0.38
	128	10	18	2.1	HJ2220	0.456
	128	10	16	2.1	HJ2220E	0.385
	140.5	13	22.5	3	HJ320	0.895
	140.3	13	20.5	3	HJ320E	0.8
	140.5	13	27.5	3	HJ2320	0.986
	140.3	13	23.5	3	HJ2320E	0.92
105	135.0	10	17.5	2.1	HJ221	0.505

1）Minimal allowable dimension for chamfer dimension r.　Note: 1. This L type collar ring is used with **NU** type cylindrical roller bearings; in duplex arrangements with **NJ** or **NU** type bearing numbers, they become **NH** type and **NUJ** type respectively. For bearing dimensions, allowable rotations, and mass, please refer to pages **B-98** to **B-102**.　2. " ∗ " indicates L type collar rings that can also be used with dimension series **22** bearings.

L type collar ring

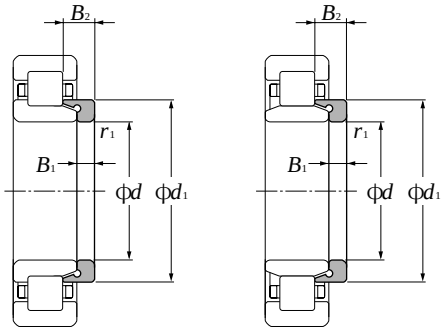

NH＝NJ＋HJ　　NUJ＝NU＋HJ

d 105～200mm

Dimensions mm					Bearing numbers	Mass kg
d	d_1	B_1	B_2	$r_{1s\,min}$ 1)		(approx.)
105	147.0	13	22.5	3	**HJ321**	0.97
110	141.5	11	18.5	2.1	**HJ222**	0.615
	142.1	11	17	2.1	**HJ222E**	0.553
	141.5	11	20.5	2.1	**HJ2222**	0.645
	142.1	11	19.5	2.1	**HJ2222E**	0.605
	155.5	14	23	3	**HJ322**	1.17
	156.6	14	22	3	**HJ322E**	1.09
	155.5	14	28	3	**HJ2322**	1.28
	156.6	14	26.5	3	**HJ2322E**	1.25
120	153	11	19	2.1	**HJ224**	0.715
	153.9	11	17	2.1	**HJ224E**	0.634
	153	11	22	2.1	**HJ2224**	0.767
	153.9	11	20	2.1	**HJ2224E**	0.705
	168.5	14	23.5	3	**HJ324**	1.4
	169.2	14	22.5	3	**HJ324E**	1.28
	168.5	14	28	3	**HJ2324**	1.53
	169.2	14	26	3	**HJ2324E**	1.42
130	165.5	11	19	3	**HJ226**	0.84
	164.7	11	17	3	**HJ226E**	0.684
	165.5	11	25	3	**HJ2226**	0.953
	164.7	11	21	3	**HJ2226E**	0.831
	182	14	24	4	**HJ326**	1.62
	183	14	23	4	**HJ326E**	1.53
	182	14	29.5	4	**HJ2326**	1.8
	183	14	28	4	**HJ2326E**	1.75
140	179.5	11	19	3	**HJ228**	1
	180.2	11	18	3	**HJ228E**	0.929
	179.5	11	25	3	**HJ2228**	1.14
	180.2	11	23	3	**HJ2228E**	1.11
	196	15	26	4	**HJ328**	1.93
	196.8	15	25	4	**HJ328E**	1.91
	196	15	33.5	4	**HJ2328**	2.21
	196.8	15	31	4	**HJ2328E**	2.3
150	193	12	20.5	3	**HJ230**	1.24

Dimensions mm					Bearing numbers	Mass kg
d	d_1	B_1	B_2	$r_{1s\,min}$ 1)		(approx.)
150	194	12	19.5	3	**HJ230E**	1.18
	193	12	26.5	3	**HJ2230**	1.39
	194	12	24.5	3	**HJ2230E**	1.42
	210	15	26.5	4	**HJ330**	2.37
	211	15	25	4	**HJ330E**	2.25
	210	15	34	4	**HJ2330**	2.69
	211	15	31.5	4	**HJ2330E**	2.6
160	207	12	21	3	**HJ232**	1.48
	207.8	12	20	3	**HJ232E**	1.34
	207	12	28	3	**HJ2232**	1.69
	206.6	12	24.5	3	**HJ2232E**	1.61
	225	15	28	4	**HJ332**	2.75
	223.2	15	25	4	**HJ332E**	2.4
	225	15	37	4	**HJ2332**	3.16
	223.2	15	32	4	**HJ2332E**	2.85
170	220.5	12	22	4	**HJ234**	1.7
	221.4	12	20	4	**HJ234E**	1.51
	220.5	12	29	4	**HJ2234**	1.93
	220.2	12	24	4	**HJ2234E**	1.82
	238	16	29.5	4	**HJ334**	3.25
	238	16	38.5	4	**HJ2334**	3.71
180	230.5	12	22	4	**HJ236**	1.8
	231.4	12	20	4	**HJ236E**	1.7
	230.5	12	29	4	**HJ2236**	2.04
	230.2	12	24	4	**HJ2236E**	1.91
	252	17	30.5	4	**HJ336**	3.85
	252	17	40	4	**HJ2336**	4.42
190	244.5	13	23.5	4	**HJ238**	2.2
	245.2	13	21.5	4	**HJ238E**	1.94
	244.5	13	31.5	4	**HJ2238**	2.52
	244	13	26.5	4	**HJ2238E**	2.38
	265	18	32	5	**HJ338**	4.45
	265	18	41.5	5	**HJ2338**	5.05
200	258	14	25	4	**HJ240**	2.6

1) Minimal allowable dimension for chamfer dimension r.　Note: 1. This L type collar ring is used with **NU** type cylindrical roller bearings; in duplex arrangements with **NJ** or **NU** type bearing numbers, they become **NH** type and **NUJ** type respectively. For bearing dimensions, allowable rotations, and mass, please refer to pages **B-102** to **B-108**.　2. " ∗ " indicates L type collar rings that can also be used with dimension series **22** bearings.

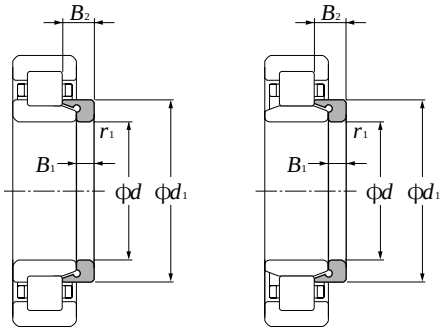

NH＝NJ＋HJ　　NUJ＝NU＋HJ

d 200～320mm

Dimensions mm					Bearing numbers	Mass kg
d	d_1	B_1	B_2	$r_{1s\,min}$ 1)		(approx.)
200	259	14	23	4	**HJ240E**	2.35
	258	14	34	4	**HJ2240**	2.99
	257.8	14	28	4	**HJ2240E**	2.86
	280	18	33	5	**HJ340**	5
	280	18	44.5	5	**HJ2340**	5.76
220	286	15	27.5	4	**HJ244**	3.55
	307	20	36	5	**HJ344**	7.05
240	313	16	29.5	4	**HJ248**	4.65
	335	22	39.5	5	**HJ348**	8.2
260	340	18	33	5	**HJ252**	6.2
	362	24	43	6	**HJ352**	11.4
280	360	18	33	5	**HJ256**	7.39
	390	26	46	6	**HJ356**	13.9
300	387	20	34.5	5	**HJ260**	9.14
320	415	21	37	5	**HJ264**	11.3

1）Minimal allowable dimension for chamfer dimension r.　Note: 1. This L type collar ring is used with **NU** type cylindrical roller bearings; in duplex arrangements with **NJ** or **NU** type bearing numbers, they become **NH** type and **NUJ** type respectively. For bearing dimensions, allowable rotations, and mass, please refer to pages **B-108** to **B-111**.　2. " ∗ " indicates L type collar rings that can also be used with dimension series **22** bearings.

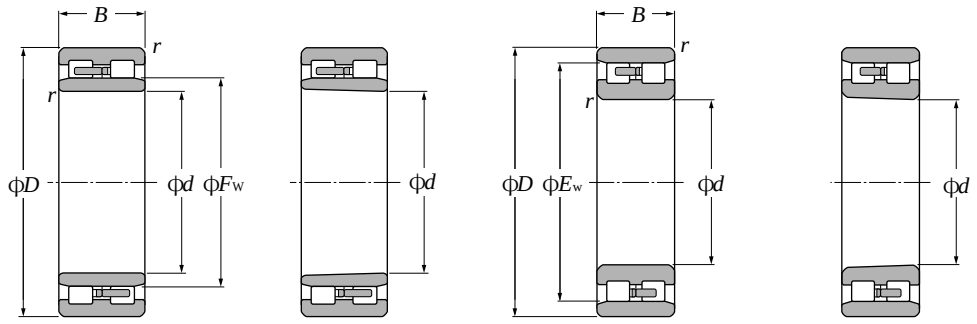

Type NNU — **Cylindrical bore** | **Tapered bore**

Type NN — **Cylindrical bore** | **Tapered bore**

d 25～110mm

Boundary dimensions mm				Basic load ratings dynamic kN		Basic load ratings static kgf		Limiting speeds min^{-1}		Bearing type NNU cylindrical bore	Bearing type NNU tapered[1] bore
d	*D*	*B*	$r_{s\,min}$[2]	C_r	C_{or}	C_r	C_{or}	grease	oil		
25	47	16	0.6	25.8	30.0	2 630	3 050	14 000	17 000	—	—
30	55	19	1	31.0	37.0	3 150	3 800	12 000	15 000	—	—
35	62	20	1	38.0	47.5	3 850	4 850	11 000	13 000	—	—
40	68	21	1	43.5	55.5	4 400	5 650	9 700	11 000	—	—
45	75	23	1	52.0	68.5	5 300	7 000	8 800	10 000	—	—
50	80	23	1	53.0	72.5	5 400	7 400	8 000	9 400	—	—
55	90	26	1.1	69.5	96.5	7 050	9 850	7 300	8 600	—	—
60	95	26	1.1	71.0	102	7 250	10 400	6 700	7 900	—	—
65	100	26	1.1	75.0	111	7 650	11 400	6 200	7 300	—	—
70	110	30	1.1	94.5	143	9 650	14 600	5 800	6 800	—	—
75	115	30	1.1	96.5	149	9 850	15 200	5 400	6 300	—	—
80	125	34	1.1	116	179	11 800	18 200	5 100	5 900	—	—
85	130	34	1.1	122	194	12 400	19 800	4 800	5 600	—	—
90	140	37	1.5	143	228	14 600	23 200	4 500	5 300	—	—
95	145	37	1.5	146	238	14 900	24 200	4 300	5 000	—	—
100	140 150	40 37	1.1 1.5	131 153	260 256	13 300 15 600	26 500 26 100	4 300 4 000	5 100 4 800	**NNU4920** —	**NNU4920K** —
105	145 160	40 41	1.1 2	133 198	268 320	13 500 20 200	27 400 33 000	4 100 3 800	4 800 4 500	**NNU4921** —	**NNU4921K** —
110	150 170	40 45	1.1 2	137 229	284 375	14 000 23 300	28 900 38 000	3 900 3 600	4 600 4 300	**NNU4922** —	**NNU4922K** —

1）"**K**" indicates bearings have tapered bore with a taper ratio of 1: 12.　2）Smallest allowable dimension for chamfer dimension *r*.

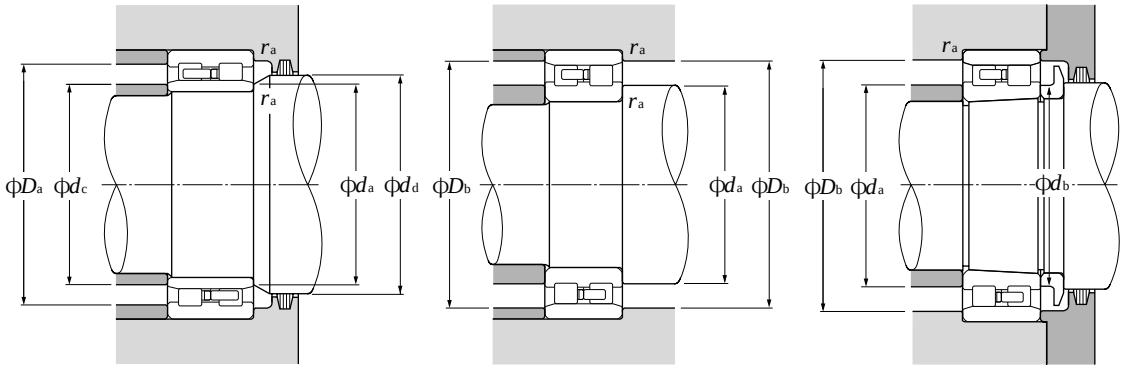

Dynamic equivalent radial load
$P_r = F_r$

Static equivalent radial load
$P_{or} = F_r$

numbers		Dimensions		Abutment and fillet dimensions								Mass (approx.)			
type NN		mm		mm								kg			
cylindrical bore	tapered[1] bore											type NNU		type NN	
		F_w	E_w	d_a min	d_b min	d_c max	d_d min	D_a max	D_b max	D_b min	r_{as} max	cylindrical bore	tapered bore	cylindrical bore	tapered bore
NN3005	NN3005K	—	41.3	29	30	—	—	—	43	42	0.6	—	—	0.124	0.121
NN3006	NN3006K	—	48.5	35	36.5	—	—	—	50	49	1	—	—	0.199	0.193
NN3007	NN3007K	—	55	40	41.5	—	—	—	57	56	1	—	—	0.242	0.235
NN3008	NN3008K	—	61	45	47	—	—	—	63	62	1	—	—	0.312	0.303
NN3009	NN3009K	—	67.5	50	52	—	—	—	70	69	1	—	—	0.405	0.393
NN3010	NN3010K	—	72.5	55	57	—	—	—	75	74	1	—	—	0.433	0.419
NN3011	NN3011K	—	81	61.5	63.5	—	—	—	83.5	82	1	—	—	0.651	0.631
NN3012	NN3012K	—	86.1	66.5	68.5	—	—	—	88.5	87	1	—	—	0.704	0.683
NN3013	NN3013K	—	91	71.5	73.5	—	—	—	93.5	92	1	—	—	0.758	0.735
NN3014	NN3014K	—	100	76.5	79	—	—	—	103.5	101	1	—	—	1.04	1.01
NN3015	NN3015K	—	105	81.5	84	—	—	—	108.5	106	1	—	—	1.14	1.11
NN3016	NN3016K	—	113	86.5	89.5	—	—	—	118.5	114	1	—	—	1.52	1.47
NN3017	NN3017K	—	118	91.5	94.5	—	—	—	123.5	119	1	—	—	1.61	1.56
NN3018	NN3018K	—	127	98	101	—	—	—	132	129	1.5	—	—	2.07	2.01
NN3019	NN3019K	—	132	103	106	—	—	—	137	134	1.5	—	—	2.17	2.1
NN4920	NN4920K	113	129	106.5	110	111	115	133.5	133.5	131	1	1.83	1.75	1.75	1.67
NN3020	NN3020K	—	137	108	111	—	—	—	142	139	1.5	—	—	2.26	2.19
NN4921	NN4921K	118	134	111.5	115	116	120	138.5	138.5	136	1	1.91	1.82	1.82	1.73
NN3021	NN3021K	—	146	114	117	—	—	—	151	148	2	—	—	2.89	2.8
NN4922	NN4922K	123	139	116.5	120	121	125	143.5	143.5	141	1	1.99	1.9	1.9	1.81
NN3022	NN3022K	—	155	119	123	—	—	—	161	157	2	—	—	3.69	3.56

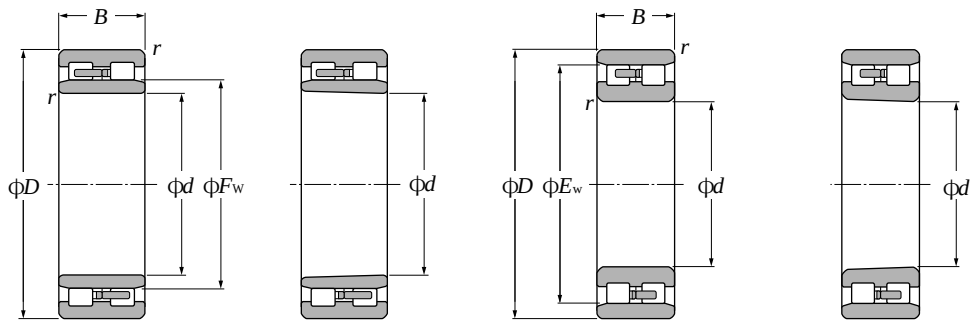

Type NNU — **Cylindrical bore** | **Tapered bore**

Type NN — **Cylindrical bore** | **Tapered bore**

d 120～280mm

Boundary dimensions mm				Basic load ratings dynamic kN		static kN		Limiting speeds dynamic kgf		static kgf		Bearing type NNU	
												cylindrical bore	tapered[1] bore
d	*D*	*B*	$r_{s\,min}$[2]	C_r	C_{or}	C_r	C_{or}	C_r	C_{or}	grease min^{-1}	oil min^{-1}		
120	165	45	1.1	183	360	18 700	37 000	3 600	4 200	**NNU4924**	**NNU4924K**
	180	46	2	233	390	23 700	40 000	3 300	3 900	—	—
130	180	50	1.5	220	440	22 400	45 000	3 300	3 900	**NNU4926**	**NNU4926K**
	200	52	2	284	475	29 000	48 500	3 100	3 600	—	—
140	190	50	1.5	227	470	23 100	48 000	3 000	3 600	**NNU4928**	**NNU4928K**
	210	53	2	298	515	30 500	52 500	2 800	3 300	—	—
150	210	60	2	345	690	35 000	70 500	2 800	3 300	**NNU4930**	**NNU4930K**
	225	56	2.1	335	585	34 000	60 000	2 600	3 100	—	—
160	220	60	2	355	740	36 500	75 500	2 600	3 100	**NNU4932**	**NNU4932K**
	240	60	2.1	375	660	38 000	67 500	2 500	2 900	—	—
170	230	60	2	360	765	37 000	78 000	2 500	2 900	**NNU4934**	**NNU4934K**
	260	67	2.1	440	775	45 000	79 000	2 300	2 700	—	—
180	250	69	2	460	965	46 500	98 500	2 300	2 700	**NNU4936**	**NNU4936K**
	280	74	2.1	565	995	57 500	102 000	2 200	2 600	—	—
190	260	69	2	475	1 030	48 500	105 000	2 200	2 600	**NNU4938**	**NNU4938K**
	290	75	2.1	580	1 040	59 000	106 000	2 000	2 400	—	—
200	280	80	2.1	555	1 180	56 500	120 000	2 100	2 400	**NNU4940**	**NNU4940K**
	310	82	2.1	655	1 170	66 500	119 000	1 900	2 300	—	—
220	300	80	2.1	585	1 300	59 500	132 000	1 900	2 200	**NNU4944**	**NNU4944K**
	340	90	3	815	1 480	83 000	151 000	1 700	2 100	—	—
240	320	80	2.1	610	1 410	62 500	144 000	1 700	2 000	**NNU4948**	**NNU4948K**
	360	92	3	855	1 600	87 000	163 000	1 600	1 900	—	—
260	360	100	2.1	900	2 070	92 000	211 000	1 600	1 800	**NNU4952**	**NNU4952K**
	400	104	4	1 060	1 990	108 000	203 000	1 500	1 700	—	—
280	380	100	2.1	925	2 200	94 500	224 000	1 400	1 700	**NNU4956**	**NNU4956K**
	420	106	4	1 080	2 080	110 000	212 000	1 300	1 600	—	—

1）"**K**" indicates bearings have tapered bore with a taper ratio of 1: 12.　2）Smallest allowable dimension for chamfer dimension *r*.

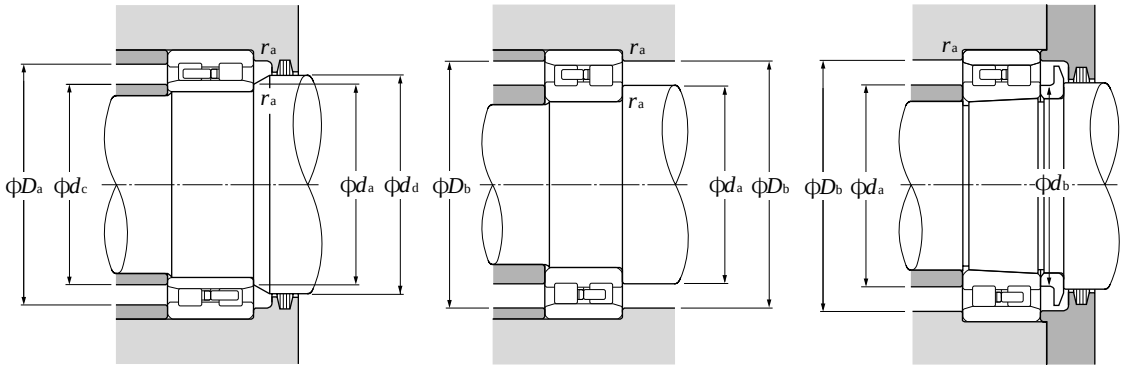

Dynamic equivalent radial load
$P_r = F_r$

Static equivalent radial load
$P_{or} = F_r$

numbers		Dimensions						Abutment and fillet dimensions				Mass (approx.) kg			
type NN		mm						mm				type NNU		type NN	
cylindrical bore	tapered[1] bore	F_w	E_w	d_a min	d_b min	d_c max	d_d min	D_a max	D_b max	D_b min	r_{as} max	cylindrical bore	tapered bore	cylindrical bore	tapered bore
NN4924	NN4924K	134.5	154.5	126.5	130	133	137	158.5	158.5	156.5	1	2.75	2.63	2.63	2.51
NN3024	NN3024K	—	165	129	133	—	—	—	171	167	2	—	—	3.98	3.83
NN4926	NN4926K	146	168	138	142	144	148	172	172	170	1.5	3.69	3.52	3.52	3.35
NN3026	NN3026K	—	182	139	143	—	—	—	191	183	2	—	—	5.92	5.71
NN4928	NN4928K	156	178	148	152	154	158	182	182	180	1.5	3.94	3.76	3.76	3.58
NN3028	NN3028K	—	192	149	153	—	—	—	201	194	2	—	—	6.44	6.21
NN4930	NN4930K	168.5	196.5	159	164	166	171	201	201	198.5	2	6.18	5.9	5.9	5.62
NN3030	NN3030K	—	206	161	166	—	—	—	214	208	2	—	—	7.81	7.53
NN4932	NN4932K	178.5	206.5	169	174	176	182	211	211	208.5	2	6.53	6.23	6.24	5.94
NN3032	NN3032K	—	219	171	176	—	—	—	229	221	2	—	—	8.92	8.59
NN4934	NN4934K	188.5	216.5	179	184	186	192	221	221	218.5	2	6.87	6.55	6.56	6.24
NN3034	NN3034K	—	236	181	187	—	—	—	249	238	2	—	—	12.6	12.2
NN4936	NN4936K	202	234	189	195	199	205	241	241	236	2	9.9	9.46	9.45	9.01
NN3036	NN3036K	—	255	191	197	—	—	—	269	257	2	—	—	16.6	16
NN4938	NN4938K	212	244	199	205	209	215	251	251	246	2	10.4	9.94	9.93	9.47
NN3038	NN3038K	—	265	201	207	—	—	—	279	267	2	—	—	18	17.4
NN4940	NN4940K	225	261	211	218	222	228	269	269	264	2	14.7	14	14	13.3
NN3040	NN3040K	—	282	211	218	—	—	—	299	285	2	—	—	21.6	20.8
NN4944	NN4944K	245	281	231	238	242	248	289	289	284	2	15.9	15.2	15.2	14.5
NN3044	NN3044K	—	310	233	240	—	—	—	327	313	2.5	—	—	29.3	28.2
NN4948	NN4948K	265	301	251	258	262	269	309	309	304	2	17.2	16.4	16.4	15.6
NN3048	NN3048K	—	330	253	261	—	—	—	347	333	2.5	—	—	32.8	31.6
NN4952	NN4952K	292	336	271	279	288	296	349	349	339	2	29.6	28.3	28.3	27
NN3052	NN3052K	—	364	276	285	—	—	—	384	367	3	—	—	47.4	45.8
NN4956	NN4956K	312	356	291	299	308	316	369	369	359	2	31.6	30.2	30.2	28.8
NN3056	NN3056K	—	384	296	305	—	—	—	404	387	3	—	—	51.1	49.3

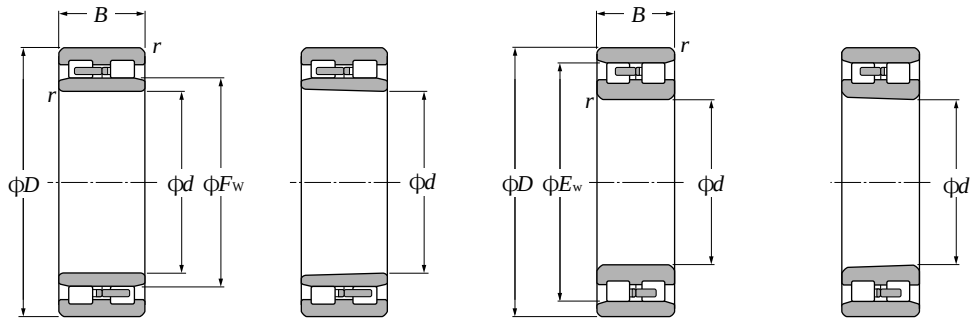

Type NNU — **Cylindrical bore** | **Tapered bore**

Type NN — **Cylindrical bore** | **Tapered bore**

d 300～500mm

Boundary dimensions mm				Basic load ratings dynamic kN		static kN		Limiting speeds min^{-1}		Bearing type NNU	
						dynamic kgf	static kgf			cylindrical bore	tapered[1] bore
d	*D*	*B*	$r_{s\,min}$[2]	C_r	C_{or}	C_r	C_{or}	grease	oil		
300	420	118	3	1 200	2 800	122 000	285 000	1 300	1 500	**NNU4960**	**NNU4960K**
	460	118	4	1 330	2 560	135 000	261 000	1 200	1 500	—	—
320	440	118	3	1 240	2 970	126 000	305 000	1 200	1 400	**NNU4964**	**NNU4964K**
	480	121	4	1 350	2 670	138 000	272 000	1 100	1 300	—	—
340	460	118	3	1 270	3 150	130 000	320 000	1 100	1 300	**NNU4968**	**NNU4968K**
	520	133	5	1 620	3 200	165 000	325 000	1 100	1 300	—	—
360	480	118	3	1 270	3 250	130 000	330 000	1 100	1 300	**NNU4972**	**NNU4972K**
	540	134	5	1 650	3 300	169 000	340 000	1 000	1 200	—	—
380	520	140	4	1 630	4 050	167 000	415 000	1 000	1 200	**NNU4976**	**NNU4976K**
	560	135	5	1 690	3 450	172 000	355 000	940	1 100	—	—
400	540	140	4	1 690	4 300	172 000	435 000	940	1 100	**NNU4980**	**NNU4980K**
	600	148	5	2 040	4 150	208 000	420 000	880	1 000	—	—
420	560	140	4	1 740	4 500	177 000	460 000	900	1 100	**NNU4984**	**NNU4984K**
	620	150	5	2 080	4 300	212 000	440 000	840	990	—	—
440	600	160	4	2 150	5 550	219 000	565 000	850	1 000	**NNU4988**	**NNU4988K**
	650	157	6	2 420	5 100	247 000	520 000	800	940	—	—
460	620	160	4	2 220	5 850	226 000	595 000	800	950	**NNU4992**	**NNU4992K**
	680	163	6	2 550	5 350	260 000	545 000	750	890	—	—
480	650	170	5	2 280	5 900	233 000	600 000	770	910	**NNU4996**	**NNU4996K**
500	670	170	5	2 360	6 200	240 000	635 000	730	860	**NNU49/500**	**NNU49/500K**

1）"**K**" indicates bearings have tapered bore with a taper ratio of 1: 12.　2）Smallest allowable dimension for chamfer dimension *r*.

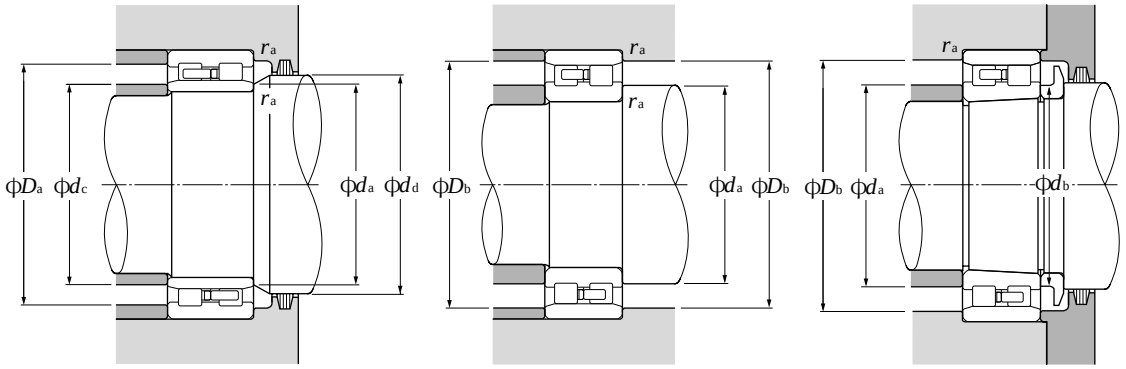

Dynamic equivalent radial load
$P_r = F_r$

Static equivalent radial load
$P_{or} = F_r$

numbers		Dimensions		Abutment and fillet dimensions								Mass (approx.) kg			
type NN		mm						mm				type NNU		type NN	
cylindrical bore	tapered[1] bore	F_w	E_w	d_a min	d_b min	d_c max	d_d min	D_a max	D_b max	D_b min	r_{as} max	cylindrical bore	tapered bore	cylindrical bore	tapered bore
NN4960	**NN4960K**	339	391	313	323	335	343	407	407	394	2.5	48.6	46.4	46.4	44.2
NN3060	**NN3060K**	—	418	316	326	—	—	—	444	421	3	—	—	70.8	68.6
NN4964	**NN4964K**	359	411	333	343	355	363	427	427	414	2.5	51.4	49.1	49	46.7
NN3064	**NN3064K**	—	438	336	346	—	—	—	464	441	3	—	—	76.2	73.5
—	—	379	—	353	363	375	383	447	—	—	2.5	54.2	51.7	—	—
NN3068	**NN3068K**	—	473	360	371	—	—	—	500	477	4	—	—	102	98.5
—	—	398	—	373	383	394	402	467	—	—	2.5	57	54.4	—	—
NN3072	**NN3072K**	—	493	380	391	—	—	—	520	497	4	—	—	107	103
—	—	425	—	396	408	420	430	504	—	—	3	84.5	80.6	—	—
NN3076	**NN3076K**	—	512	400	411	—	—	—	540	516	4	—	—	113	109
—	—	445	—	416	428	440	450	524	—	—	3	88.2	84.1	—	—
NN3080	**NN3080K**	—	547	420	432	—	—	—	580	551	4	—	—	146	141
—	—	465	—	436	448	460	470	544	—	—	3	92	87.7	—	—
NN3084	**NN3084K**	—	567	440	452	—	—	—	600	571	4	—	—	154	148
—	—	492	—	456	469	487	497	584	—	—	3	127	121	—	—
NN3088	**NN3088K**	—	596	464	477	—	—	—	626	601	5	—	—	178	172
—	—	512	—	476	489	507	517	604	—	—	3	132	126	—	—
NN3092	**NN3092K**	—	622	484	498	—	—	—	656	627	5	—	—	202	195
—	—	534	—	500	514	531	541	630	—	—	4	156	149	—	—
—	—	556	—	520	534	551	561	650	—	—	4	162	155	—	—

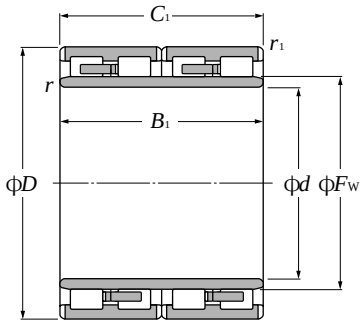

Drawing 1

d 120～200mm

Boundary dimensions						Basic load ratings			
						dynamic	static	dynamic	static
mm						kN		kgf	
d	D	B_1	C_1	$r_{s\,min}$ 1)	$r_{1s\,min}$ 1)	C_r	C_{or}	C_r	C_{or}
120	180	92	92	2.5	2.5	400	785	40 500	80 000
	180	105	105	2.5	2.5	445	855	45 500	87 000
130	200	104	104	2.5	2.5	490	955	49 500	97 000
140	210	116	116	2.5	2.5	510	1 030	52 000	105 000
145	210	155	155	2.5	2.5	705	1 640	71 500	168 000
	225	156	156	2.5	2.5	810	1 750	82 500	178 000
150	220	150	150	2.5	2.5	750	1 640	76 500	168 000
	230	130	130	2.5	2.5	725	1 520	73 500	155 000
	230	156	156	2.5	2.5	930	2 040	95 000	208 000
	250	150	150	2.5	2.5	885	1 640	90 500	167 000
160	220	180	180	2.5	2.5	920	2 490	93 500	254 000
	230	130	130	2.5	2.5	665	1 340	68 000	136 000
	230	168	168	2.5	2.5	915	2 170	93 500	222 000
	240	170	170	2	2.5	980	2 290	100 000	234 000
170	230	120	120	2.5	2.5	620	1 520	63 000	155 000
	240	156	156	2.5	2.5	905	2 170	92 500	222 000
	240	160	160	2.5	2.5	905	2 180	92 000	222 000
	250	168	168	2.5	2.5	970	2 220	99 000	226 000
	255	180	180	2.5	2.5	1 100	2 430	112 000	247 000
	260	150	150	2.5	2.5	835	1 750	85 000	179 000
	260	225	225	2.5	2.5	1 310	3 150	134 000	320 000
180	250	156	156	2.5	2.5	895	2 180	91 500	223 000
	260	168	168	2.5	2.5	1 020	2 400	104 000	244 000
	265	180	180	2.5	2.5	1 090	2 510	111 000	256 000
190	260	168	168	2.5	2.5	980	2 600	100 000	265 000
	270	170	170	2.5	2.5	1 090	2 660	111 000	272 000
	270	200	200	2.5	2.5	1 260	3 100	128 000	315 000
	280	200	200	2.5	2.5	1 240	2 910	126 000	297 000
200	270	170	170	2.5	2.5	970	2 610	99 000	266 000
	280	190	190	2.5	2.5	1 190	3 150	121 000	320 000
	280	200	200	2.5	2.5	1 310	3 300	134 000	335 000

1) Minimal allowable dimension for chamfer dimension r or r_1. 2) An oil hole and groove are provided in the center of the outer ring. The oil groove is not provided on the side.

Bearing numbers	Dimensions F_w	Drawing no.	Mass kg (approx.)
4R2437	137	1	8.2
4R2438	135	1	9.3
4R2628	150	1	12.1
4R2823	160	1	13.9
4R2906	166	1	18
4R2908	169	1	23.4
4R3031	168	1	19.4
4R3029	174	1	20
4R3040	174	1	24.5
4R3039	177	1	29.6
4R3224	177	1	20.2
4R3226	180	1	16.6
4R3232	179	1	23.4
4R3225	183	1	27.8
4R3426	187	1	14.2
4R3429	189	1	22.2
4R3423	190	1	22.8
4R3432	193	1	28.2
4R3425	193	1	19.3
4R3433	192	1	29.5
4R3431	196	1	44
4R3625	200	1	23.2
4R3628	202	1	29.4
4R3618	204	1	34.2
4R3820	212	1	26.9
4R3818	213	1	31.7
4R3821	212	1	37.5
4R3823	214	1[2)]	41.5
4R4039	222	1	28.5
4R4026	223	1	36.7
4R4037	222	1	40.5

Note: **Drawing 1** represents a bearing with solid rollers and machined cage.

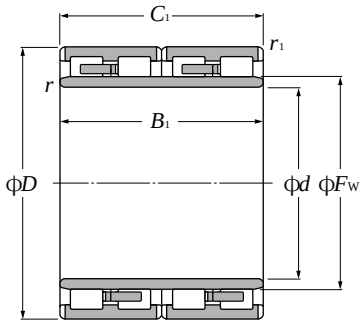

Drawing 1

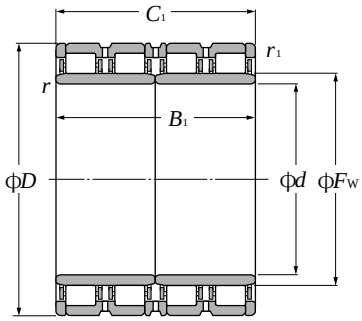

Drawing 2

d 200～300mm

Boundary dimensions						Basic load ratings			
						dynamic	static	dynamic	static
		mm				kN		kgf	
d	D	B_1	C_1	$r_{s\,min}$ 1)	$r_{1s\,min}$ 1)	C_r	C_{or}	C_r	C_{or}
200	290	192	192	2.5	2.5	1 290	3 150	132 000	320 000
	320	216	216	3	3	1 750	3 650	179 000	375 000
210	290	192	192	2.5	2.5	1 230	3 350	126 000	340 000
220	290	192	192	2.5	2.5	1 190	3 350	122 000	340 000
	300	160	160	2.5	2.5	1 000	2 590	102 000	264 000
	310	192	192	2.5	2.5	1 390	3 400	141 000	350 000
	310	204	204	2.5	2.5	1 420	3 750	144 000	385 000
	310	215	215	2.5	2.5	1 530	3 750	156 000	380 000
	310	225	225	2.5	2.5	1 480	3 950	151 000	405 000
	310	265	265	2.5	2.5	1 630	4 500	167 000	460 000
	320	160	160	3	3	1 190	2 550	121 000	260 000
	320	210	210	2.5	2.5	1 550	3 650	158 000	370 000
230	330	206	206	2.5	2.5	1 520	3 800	155 000	385 000
	340	260	260	3	3	2 050	5 100	209 000	520 000
240	330	220	220	3	3	1 490	4 150	152 000	420 000
	340	220	220	3	3	1 670	4 200	170 000	425 000
	360	220	220	2.5	2.5	1 760	4 050	179 000	415 000
250	350	220	220	3	3	1 730	4 300	176 000	440 000
260	370	220	220	3	3	1 760	4 450	179 000	455 000
	380	280	280	3	3	2 420	6 250	247 000	635 000
270	380	280	280	2.5	2.5	2 580	6 850	263 000	700 000
280	390	220	220	3	3	1 780	4 650	181 000	475 000
	390	275	275	2.5	2.5	2 290	6 250	233 000	635 000
	420	280	280	4	4	2 430	6 150	248 000	630 000
290	410	240	240	3	3	2 240	5 550	228 000	565 000
	420	300	300	3	3	2 830	7 500	288 000	765 000
300	400	300	300	3	3	2 480	7 500	253 000	765 000
	420	240	240	3	3	2 020	5 450	206 000	555 000
	420	300	300	3	3	2 720	7 600	278 000	775 000
	420	300	300	3	3	2 900	7 850	295 000	800 000

1) Minimal allowable dimension for chamfer dimension r or r_1. 2) An oil hole and groove are provided in the center of the outer ring.
3) An oil hole and groove are not provided on the outer ring spacer.

Bearing numbers	Dimensions F_w	Drawing no.	Mass kg (approx.)
4R4041	226	1	42.5
4R4028	231	1	67
4R4206	236	1	39.5
4R4413	239	1	33.8
4R4419	245	1	32.8
4R4426	246	1	46.9
4R4425	247	1	49.8
4R4420	242	1	51.5
4R4416	245	1	54.9
4R4430	245	1	63.5
4R4428	245	1	46.5
4R4429	248	1	60.5
4R4614	258	1	58.6
4R4611	261	1	82.6
4R4811	270	1[2)]	56.8
4R4806	268	1	63.6
4R4807	274	1	79.6
4R5008	278	1	66
4R5217	292	1	76.5
4R5213	294	1	109
4R5405	299.7	2[3)]	105
4R5611	312	1	81.3
4R5612	312	1	105
4R5605	323	1	139
4R5806	320	1	103
4R5805	327	1	141
E-4R6014	328	1	104
E-4R6017	334	1	106
E-4R6015	334	1	125
E-4R6020	332	2	130

Note: **Drawing 1** represents a bearing with solid rollers and machined cage; **Drawing 2** represents a bearing with hollow rollers and pin type cage.

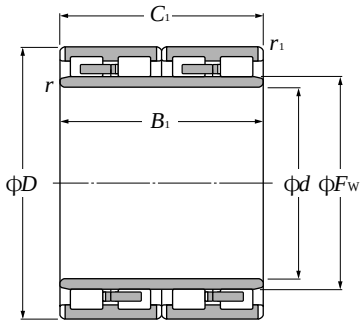

Drawing 1

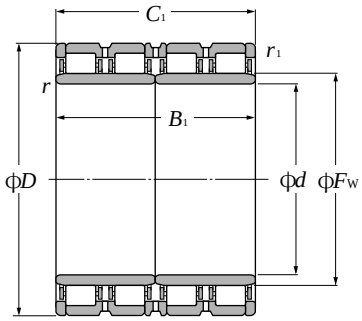

Drawing 2

d 300～460mm

Boundary dimensions						Basic load ratings			
						dynamic	static	dynamic	static
mm						kN		kgf	
d	D	B_1	C_1	$r_{s\,min}$ 1)	$r_{1s\,min}$ 1)	C_r	C_{or}	C_r	C_{or}
300	420	320	300	3	3	2 900	7 850	295 000	800 000
	460	270	270	3	3	2 510	5 350	256 000	545 000
310	430	240	240	3	3	2 240	5 950	228 000	605 000
320	440	240	230	3	3	2 290	6 050	234 000	615 000
	450	240	240	3	3	2 370	6 150	242 000	630 000
	460	340	340	3	3	3 400	9 450	345 000	960 000
	470	350	350	3	3	4 150	10 900	425 000	1 110 000
330	440	200	200	3	3	1 820	4 850	186 000	495 000
	460	340	340	4	4	3 250	8 850	330 000	905 000
340	480	370	350	5	5	3 450	9 650	350 000	985 000
	490	300	300	4	4	3 350	8 300	340 000	845 000
360	510	400	400	5	5	4 250	11 500	435 000	1 170 000
370	480	230	230	5	5	2 100	6 250	214 000	635 000
	520	400	400	5	5	4 650	13 500	475 000	1 370 000
380	520	280	280	4	4	3 400	9 150	350 000	935 000
	520	300	300	4	4	3 550	9 600	360 000	980 000
	540	400	400	4	4	5 200	15 200	530 000	1 550 000
400	560	400	400	5	5	4 250	11 800	430 000	1 210 000
	560	410	410	4	4	5 750	17 000	585 000	1 730 000
410	546	400	400	5	5	4 200	12 700	430 000	1 290 000
420	560	280	280	4	4	3 150	8 750	320 000	895 000
	580	230	230	4	4	2 430	6 250	248 000	635 000
	620	400	400	5	5	5 000	13 400	510 000	1 360 000
440	620	450	450	5	5	6 450	18 700	660 000	1 910 000
460	620	400	400	4	4	5 350	16 700	545 000	1 700 000
	620	400	400	4	4	4 950	15 000	505 000	1 530 000
	650	470	470	5	5	7 150	20 600	730 000	2 100 000

1) Minimal allowable dimension for chamfer dimension r or r_1. 2) Oil inlet and oil groove are in center of the outer ring; no oil groove on the side.
3) Oil inlet in space of outer ring; no oil groove. 4) One-piece inner ring.

Bearing numbers	Dimensions F_w	Drawing no.	Mass kg (approx.)
E-4R6018	332	2	136
E-4R6019	344	1	162
E-4R6202	344.5	1	108
E-4R6414	351	1	106
E-4R6411	358	1	125
E-4R6412	360	1	178
E-4R6406	361.7	2	212
E-4R6603	360	1[2)]	83.6
E-4R6605	365	1	181
E-4R6811	378	1	198
E-4R6804	377	1	187
E-4R7203	397	1[2)]	262
E-4R7405	400	1	106
E-4R7404	409	1	273
E-4R7605	417	1	174
E-4R7607	416	2[3)]	210
E-4R7604	422	2[3)]	325
E-4R8007	446	1	303
E-4R8010	445	2	349
E-4R8201	444	1[2)]	256
E-4R8403	457	1	189
E-4R8404	466	1	181
E-4R8401	478	1	410
E-4R8801	487	2	437
E-4R9211	502	2[3)4)]	383
E-4R9209	502	1	341
E-4R9216	509	2	540

Note: **Drawing 1** represents a bearing with solid rollers and machined cage; **Drawing 2** represents a bearing with hollow rollers and pin type cage.

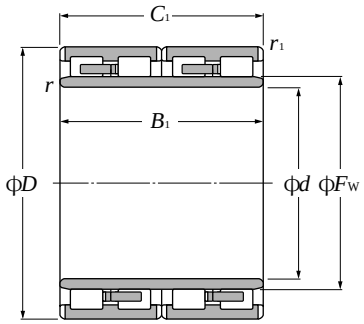

Drawing 1

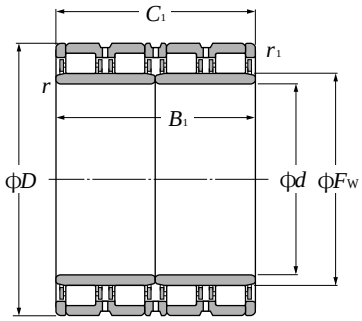

Drawing 2

d 480～690mm

Boundary dimensions						Basic load ratings			
						dynamic	static	dynamic	static
	mm					kN		kgf	
d	D	B_1	C_1	$r_{s\,min}$ 1)	$r_{1s\,min}$ 1)	C_r	C_{or}	C_r	C_{or}
480	650	420	420	5	5	5 950	18 100	605 000	1 840 000
	650	450	450	9.5X20 °	5	7 100	21 600	720 000	2 200 000
	680	500	500	6	6	7 950	24 000	810 000	2 450 000
500	680	420	405	5	5	7 100	22 900	725 000	2 340 000
	690	470	470	5	5	7 650	22 500	780 000	2 290 000
	690	510	510	5	5	7 750	24 600	790 000	2 500 000
	700	515	515	5	5	7 900	24 100	805 000	2 450 000
	710	480	480	6	6	8 650	24 700	880 000	2 520 000
	720	530	530	5	5	8 250	25 000	840 000	2 550 000
510	670	320	320	5	5	4 550	13 500	465 000	1 380 000
	700	540	540	6	6	8 300	25 000	845 000	2 550 000
520	700	540	540	6	6	8 200	25 500	835 000	2 600 000
	735	535	535	5	5	9 000	26 600	915 000	2 710 000
530	700	540	540	6	6	7 850	25 400	800 000	2 590 000
	760	520	520	6	6	9 150	26 700	935 000	2 730 000
	780	570	570	6	6	10 300	29 100	1 050 000	2 970 000
550	800	520	520	6	6	9 450	27 000	965 000	2 750 000
560	680	360	360	3	3	4 650	16 500	475 000	1 680 000
570	815	594	594	6	6	11 800	34 500	1 200 000	3 500 000
600	820	575	575	12X20 °	6	10 000	31 500	1 020 000	3 200 000
	870	540	540	7.5	7.5	10 600	29 600	1 090 000	3 000 000
	870	640	640	7.5	7.5	13 600	40 500	1 390 000	4 150 000
610	870	660	660	9.5	7.5	12 600	40 000	1 280 000	4 100 000
650	920	670	670	7.5	4	14 600	46 000	1 490 000	4 700 000
	920	690	690	7.5	7.5	14 300	46 500	1 460 000	4 750 000
660	820	440	440	5	4	7 300	27 800	745 000	2 840 000
690	980	715	715	7.5	7.5	16 800	54 500	1 720 000	5 550 000

1) Minimal allowable dimension for chamfer dimension r or r_1. 2) Oil inlet and oil groove are in center of the outer ring; no oil groove on the side.
3) Oil inlet in space of outer ring; no oil groove.

Bearing numbers	Dimensions F_w	Drawing no.	Mass kg (approx.)
E-4R9607	523	2[4]	369
E-4R9609	525	2[4]	395
E-4R9604	532	2	640
E-4R10010	550	2[3]	495
E-4R10016	547	2	590
E-4R10006	552	2	640
E-4R10011	554	2	680
E-4R10008	556	2	675
E-4R10015	568	2	780
E-4R10201	554	2[4]	335
E-4R10202	558	2	689
E-4R10403	564	2	658
E-4R10402	574.5	2	740
E-4R10603	574	2	626
E-4R10601	590	2	800
E-4R10602	601	2	1 010
E-4R11001	622	2	965
E-4R11202	590	1	265
E-4R11402	628	2	1 040
E-4R12003	655	2	980
E-4R12002	672	2	1 150
E-4R12001	672	2	1 330
E-4R12202	680	2[2]	1 400
E-4R13005	723	2	1 500
E-4R13003	723	2	1 550
E-4R13201	702	2	580
E-4R13802	767.5	2	1 850

4）One-piece inner ring. Note: **Drawing 1** represents a bearing with solid rollers and machined cage; **Drawing 2** represents a bearing with hollow rollers and pin type cage.

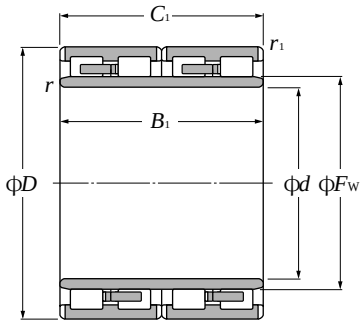

Drawing 1

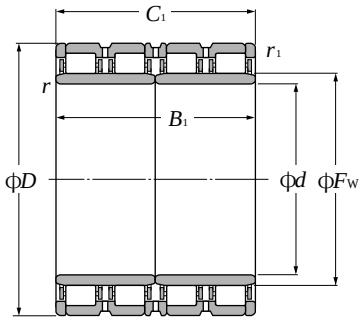

Drawing 2

d 700～1 200mm

Boundary dimensions						Basic load ratings			
						dynamic	static	dynamic	static
	mm					kN		kgf	
d	*D*	B_1	C_1	$r_{s\,min}$ [1]	$r_{1s\,min}$ [1]	C_r	C_{or}	C_r	C_{or}
700	930	620	620	15X20 °	6	12 900	43 000	1 320 000	4 400 000
710	1 000	715	715	9.5	6	16 800	54 500	1 710 000	5 550 000
725	1 000	700	700	6	6	15 900	53 500	1 620 000	5 450 000
750	1 050	745	720	7.5	7.5	17 600	58 000	1 790 000	5 900 000
	1 090	745	720	7.5	7.5	19 100	60 500	1 950 000	6 150 000
760	1 030	750	750	7.5	7.5	17 300	59 500	1 760 000	6 050 000
	1 080	805	790	6	6	18 700	61 000	1 900 000	6 250 000
	1 100	745	720	7.5	7.5	19 100	60 500	1 950 000	6 150 000
800	1 080	700	700	7.5	7.5	16 500	55 000	1 680 000	5 600 000
	1 080	750	750	6	6	17 300	59 000	1 760 000	6 000 000
820	1 130	800	800	7.5	7.5	19 600	66 500	2 000 000	6 800 000
	1 130	825	800	7.5	7.5	19 600	66 500	2 000 000	6 800 000
	1 160	840	840	7.5	7.5	21 600	71 000	2 200 000	7 250 000
840	1 160	840	840	5	7.5	21 600	71 000	2 200 000	7 250 000
850	1 150	650	650	9.5	9.5	15 700	51 000	1 610 000	5 200 000
	1 150	800	800	6	6	19 700	71 000	2 010 000	7 250 000
	1 180	650	650	7.5	7.5	16 400	51 500	1 670 000	5 250 000
	1 180	850	850	9.5	9.5	24 100	78 500	2 460 000	8 000 000
860	1 160	735	710	6	6	17 800	62 500	1 810 000	6 400 000
900	1 230	895	870	7.5	7.5	24 700	88 000	2 520 000	9 000 000
920	1 280	865	850	7.5	7.5	26 200	88 500	2 670 000	9 000 000
1000	1 310	880	880	9.5	9.5	23 400	88 500	2 380 000	9 000 000
	1 360	800	800	7.5	7.5	25 000	85 000	2 550 000	8 650 000
1030	1 380	850	850	7.5	7.5	24 400	89 000	2 490 000	9 100 000
1200	1 590	1 050	1 050	7.5	7.5	36 000	133 000	3 650 000	13 600 000

1）Minimal allowable dimension for chamfer dimension r or r_1.　2）Inner ring is divided into four.　3）The oil hole of the outer ring is provided with fitting nozzle for oil mist.

Bearing numbers	Dimensions F_w	Drawing no.	Mass kg (approx.)
E-4R14003	763	2	1 200
E-4R14205	787.5	2[2)]	1 900
E-4R14501	796	2	1 730
E-4R15001	830	2[3)]	2 180
E-4R15002	845	2[3)]	2 530
E-4R15204	828	2[3)]	2 000
E-4R15207	845	2[3)]	2 550
E-4R15203	855	2[3)]	2 560
E-4R16004	870	2	1 950
E-4R16005	880	2	2 090
E-4R16406	903	2[3)]	2 450
E-4R16405	903	2	2 520
E-4R16403	910	2	2 930
E-4R16801	920	2	2 840
E-4R17001	941	2	1 980
E-4R17003	930	2	2 430
E-4R17004	945	2	2 270
E-4R17002	928	2	2 970
E-4R17201	940	2	2 310
E-4R18001	985	2[3)]	3 250
E-4R18401	1 015	2	3 560
E-4R20001	1 080	2	3 260
E-4R20002	1 090	2	3 530
E-4R20601	1 124	2	3 800
E-4R24002	1 295	2[2)]	6 220

Note: **Drawing 2** represents a bearing with hollow rollers and pin type cage.

Single row tapered roller bearings

Double row tapered roller bearings

Four row tapered roller bearings

1. Types, design features, and characteristics

Tapered roller bearings are designed so the tapered vertex of the raceway surfaces of the inner and outer rings and rollers converge at one point on the centerline of the bearing.

Due to this design feature, rollers move along the center of the raceway surfaces. The tapered rollers are guided by the compound force of the inner and outer raceway surfaces which keep them pressed up against the large rib on the inner ring. A large variety of these bearings, including single, double, and four row arrangements, are in use both in metric and inch series.

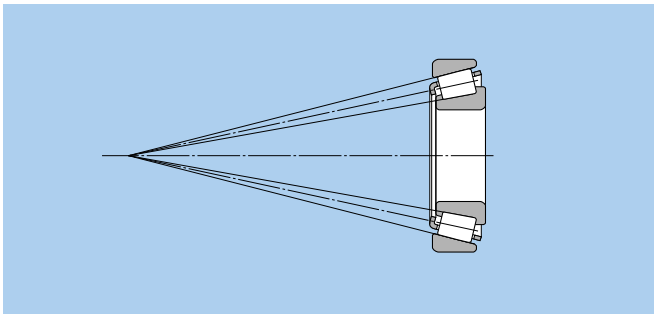
Diagram 1.

Table 1 Tapered roller bearing types and characteristics

Type	Characteristics
Single row tapered roller bearings	(1) There are both metric and inch series, and they have been standardized as shown in the following table. **Dimension series** Metric series: Regulations: ● JIS B 1512, ● ISO 355; Basic number: Example, 30210, ∗T2EE040 Inch series: Regulations: ● ABMA (includes metric J-series); Basic number: Inner ring no. / outer ring no. ("J" appears at the beginning of the basic number in the case of J-series.) ∗Dimension series previously not covered by 3XX are regulated under JIS B 1512; dimensions previously missing from 3XX will henceforth use the bearing number. (2) In addition to level type, there are also medium contact angle and large contact angle types, and the contact angle code C and D, respectively, is appended to the basic numbers of the latter two types. (3) Subunits Tapered roller bearings can be disassembled into parts — the inner ring, rollers, and cage (collectively known as the "cone") — and the outer ring (known as the "cup"). These are the bearing's "subunits". Subunit dimensions are standardized under ISO or ABMA standards, and unified subunits are interchangeable within each dimensional standard. However, high precision grade bearings are generally not interchangeable, and these subunits must be used by assembling only subunits with identical manufacturing numbers. Aside from any cautionary notes that may appear, the single row tapered roller bearings listed in the dimension tables have subunits standardized for both metric and inch systems (including J series). (Refer to **Diagram 2**) Subunit dimensions 2α, E E : Outer ring (cup) nominal small-end diameter α : Nominal contact angle **Diagram 2.**

Continued on next page

Table 1 (continued)

Type	Characteristics
Single row tapered roller bearings	(4) These bearings are constructed to have a high capacity for radial loads, axial loads, and combined loads. The larger the contact angle, the greater the axial load capacity becomes. When a pure radial load is placed on the bearings, an induced load in the axial direction is also generated, and so these bearings are generally used in pairs arranged face to face. (5) When used in pairs, proper internal clearances and preload can be set by adjusting the distance between the two bearings' inner and outer rings. (6) Single row tapered roller bearings are separable, so both the inner and outer rings can be used with tight fits. (7) Tapered roller bearings are also manufactured with flanges attached to the outer rings. For more details, contact NTN Engineering. (Refer to **Diagram 3**) **Diagram 3.**
Double row tapered roller bearings	(1) Back-to-back arrangement (using double row outer rings) and face-to-face arrangement (using double row inner rings) are both available, and they have been adjusted so that each type's internal clearance values are fixed. Therefore, only parts with identical manufacturing numbers can be used and they must be assembled according to their code numbers. (Refer to **Diagram 4**) (2) The axial internal clearances for double and duplex bearings are listed in **Table 8, 9** on pages A-58. (3) Pairs of duplex single row tapered roller bearings are also manufactured. For more details, contact NTN Engineering. 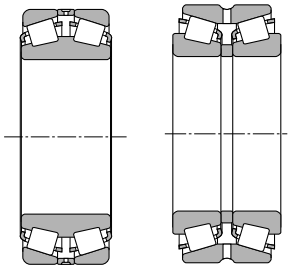 Face-to-face Back-to-back **Diagram 4.**
Four row tapered roller bearings	(1) As shown in **Diagram 5**, four row tapered roller bearings are constructed of two double row inner rings and two double row outer rings. (2) Life of large bearings is extended by using case hardened steel, hollow rollers and pin-type cages. (3) Used primarily where heavy load capacity is important, and in the roller necks of rolling mills. 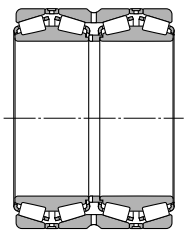 **Diagram 5.**

2. Standard cage type

In general, pressed cages are used in tapered roller bearings.

However, for large sized bearings, machined or pin type cages are also used; and for small sized bearings, molded resin cages are also used.

3. Allowable misalignment

Single row and
back-to-back arrangement: ·····0.0005rad (1.5')
Face-to-face arrangement: ·····0.001rad (3.5')

In situations where large displacement is necessary, please consult NTN Engineering.

4. Precautions when using

If bearing load is light during operation, or if the ratio of axial to radial load for duplex and double row bearings exceeds the value of e, slipping develops between the rollers and raceway, sometimes resulting in smearing. The mass of rollers and cages particularly tends to be large for large tapered roller bearings. For details, please contact NTN Engineering.

5. ECO-Top tapered roller bearings

In recent years, there has been an increasing demand for small and medium tapered roller bearings that contribute to energy savings, higher output, longer life, higher speed and more efficient assembly, particularly for automobiles. NTN Engineering is responding to this demand by providing bearings with special specifications based on 4Top tapered roller bearings, which are standard bearings.

In order to contribute to the ecology movement, in addition to enhancing existing special specifications, NTN Engineering has developed the next-generation NTN Engineering tapered roller bearing **ECO-Top tapered roller bearing** having improved long life, low torque, anti-seizure, easy assembly specifications. The features are as follows (compared with NTN Engineering standard bearings):

(1) Ten times longer life using contaminated lubricant
(2) Two times longer life using clean lubricant
(3) At least 10% lower torque in practical rotation range
(4) 25% better anti-seizure performance
(5) Two times better loss-of-preload resistance
(6) Half reduced number of revolutions to stable assembled bearing width

For details, please contact NTN Engineering.

Eco-Top tapered roller bearings

Inch series Tapered Roller Bearings (single row) index

Series number	Cone / cup number	Page of bearing dimension table
335	336/332	B-173
335	339/332	B-169
335	344/332	B-171
355	350A/354A	B-171
355	355/354A	B-173
355	358/354A	B-175
355	359A/354A	B-175
355	359S/352	B-175
365	365/362A	B-177
365	366/362A	B-177
365	367/362A	B-175
365	368/362A	B-177
365	368A/362	B-177
365	368S/362A	B-179
365	369A/362A	B-175
365	370A/362A	B-177
385	385/382A	B-181
385	385A/382A	B-181
385	386A/382A	B-175
385	387/382A	B-181
385	387A/382A	B-181
385	387A/382A	B-181
385	387S/382A	B-181
385	388A/382A	B-181
385	389/382A	B-181
385	389A/382A	B-179
395	390/394A	B-181
395	390A/394A	B-183
395	392/394A	B-183
395	395A/394A	B-185
395	396/394A	B-177
395	397/394A	B-183
395	399A/394A	B-185
415	418/414	B-171
415	420/414	B-171
435	436/432	B-175
435	438/432	B-173
455	455/453X	B-179
455	460/453X	B-173
455	462/453X	B-181
455	463/453X	B-175
455	469/453A	B-181
455	469/453X	B-181
455	469/454	B-181
475	477/472	B-183
475	480/472	B-185
475	482/472	B-185
475	483/472	B-183
475	484/472	B-187
495	495/493	B-189
495	495A/493	B-187
495	495AS/493	B-189
495	496/493	B-189
495	497/492A	B-191
495	498/493	B-191
525	527/522	B-173
525	528/522	B-175
525	529/522	B-179
535	537/532X	B-179
535	539/532X	B-179
535	543/532X	B-171
555	555/552A	B-179
555	555S/552A	B-181
555	557S/552A	B-179
555	558/552A	B-183
555	559/552A	B-183
555	560/552A	B-185
555	560S/552A	B-185
565	565/563	B-183
565	566/563	B-185
565	567/563	B-187
565	567A/563	B-187
565	568/563	B-187
575	575/572	B-187
575	575S/572	B-187
575	576/572	B-187
575	577/572	B-187
575	580/572	B-189
575	581/572	B-189
575	582/572	B-189
595	593/592A	B-191
595	594/592A	B-193
595	594A/592XE	B-193
595	595/592A	B-189
595	596/592A	B-191
595	598A/592A	B-191
615	619/612	B-179
615	621/612	B-179
615	623/612	B-181
635	639/632	B-183
635	641/632	B-185
635	641/633	B-185
635	643/632	B-185
635	644/632	B-187
655	655/653	B-185
655	659/653	B-187
655	661/653	B-189
655	663/652	B-189
655	663/653	B-189
655	665/653	B-191
675	681/672	B-191
675	683/672	B-193
675	685/672	B-193
675	687/672	B-193
745	740/742	B-189
745	744/742	B-187
745	745A/742	B-185
745	748S/742	B-187
745	749/742	B-191
745	749A/742	B-189
755	756A/752	B-189
755	757/752	B-189
755	758/752	B-191
755	759/752	B-191
755	760/752	B-191
775	780/772	B-193
775	782/772	B-193
795	799/792	B-195
795	799A/792	B-195
835	835/832	B-185
835	842/832	B-189
835	850/832	B-191
855	861/854	B-193
895	896/892	B-197
895	898/892	B-197
935	936/932	B-193
935	938/932	B-195
935	941/932	B-193
1200	1280/1220	B-161
1300	1380/1328	B-161
1300	1380/1329	B-161
1700	1755/1729	B-161
1700	1775/1729	B-161
1700	1779/1729	B-163
1700	1780/1729	B-163
1900	1985/1930	B-163
1900	1985/1931	B-165
1900	1985/1932	B-165
2400	2474/2420	B-165
2500	2558/2523	B-165
2500	2578/2523	B-165
2500	2580/2520	B-167
2500	2580/2523	B-167
2500	2582/2523	B-167
2500	2585/2523	B-167
2600	2682/2631	B-163
2600	2687/2631	B-163
2600	2688/2631	B-163
2600	2689/2631	B-165
2600	2690/2631	B-165
2700	2776/2720	B-171
2700	2780/2720	B-169
2700	2785/2720	B-167
2700	2788/2720	B-171
2700	2789/2720	B-171
2700	2793/2720	B-167
2700	2793/2729	B-169
2700	2793/2735X	B-167
2800	2878/2820	B-167
2800	2879/2820	B-167
2900	2984/2924	B-175
3100	3187/3120	B-165

Inch series Tapered Roller Bearings (single row) index

Series number	Cone / cup number	Page of bearing dimension table
3100	3188/3120	B-167
3100	3193/3120	B-167
3100	3196/3120	B-167
3300	3379/3320	B-169
3300	3382/3321	B-171
3300	3382/3339	B-171
3300	3386/3320	B-171
3400	3476/3420	B-167
3400	3478/3420	B-169
3400	3479/3420	B-169
3400	3490/3420	B-171
3500	3576/3525	B-173
3500	3578/3520	B-173
3500	3578/3525	B-173
3500	3579/3525	B-173
3500	3580/3525	B-171
3500	3586/3525	B-175
JS3500	JS3549A/JS3510	B-169
3700	3767/3720	B-179
3700	3775/3720	B-177
3700	3776/3720	B-175
3700	3777/3720	B-175
3700	3778/3720	B-175
3700	3780/3720	B-177
3700	3780/3726	B-177
3700	3780/3732	B-177
3700	3781/3720	B-177
3700	3782/3720	B-173
3800	3872/3820	B-169
3800	3875/3820	B-171
3800	3880/3820	B-173
3900	3975/3920	B-179
3900	3979/3920	B-181
3900	3980/3920	B-183
3900	3982/3920	B-183
3900	3984/3925	B-185
3900	3994/3920	B-185
A4000	A4050/A4138	B-161
A4000	A4059/A4138	B-161
4300	4388/4335	B-173
4300	4395/4335	B-173
5300	5395/5335	B-177
5500	5578/5535	B-179
5500	5583/5535	B-183
5500	5584/5535	B-183
5700	5760/5735	B-187
A6000	A6075/A6157	B-161
6200	6277/6220	B-175
6300	6379/6320	B-185
6300	6386/6320	B-185
6400	6460/6420	B-187
6400	6461/6420	B-189
6400	6461A/6420	B-187
6500	6559C/6535	B-189
6500	6576/6535	B-189
6500	6580/6535	B-191
02400	02474/02420	B-165
02400	02475/02420	B-167
02400	02476/02420	B-167
02800	02872/02820	B-165
02800	02875/02820	B-167
02800	02877/02820	B-167
02800	02878/02820	B-167
03000	03062/03162	B-161
05000	05062/05185	B-161
05000	05066/05185	B-161
05000	05075/05185	B-161
05000	05079/05185	B-161
07000	07079/07196	B-161
07000	07087/07196	B-161
07000	07093/07196	B-163
07000	07096/07196	B-163
07000	07097/07196	B-163
07000	07098/07196	B-163
07000	07100/07196	B-163
07000	07100/07204	B-163
07000	07100S/07196	B-163
09000	09062/09195	B-161
09000	09067/09195	B-161
09000	09067/09196	B-161
09000	09078/09195	B-161
09000	09081/09195	B-161
11000	11162/11300	B-171
11000	11162/11315	B-171
11500	11590/11520	B-161
LM11700	LM11749/LM11710	B-161
LM11900	LM11949/LM11910	B-161
12000	12175/12303	B-173
12500	12580/12520	B-161
M12600	M12648/M12610	B-161
M12600	M12649/M12610	B-161
LM12700	LM12749/LM12711	B-161
13600	13685/13621	B-169
13600	13687/13621	B-169
13800	13889/13830	B-169
14000	14116/14274	B-165
14000	14116/14276	B-165
14000	14117A/14276	B-165
14000	14124/14276	B-167
14000	14125A/14276	B-167
14000	14130/14276	B-167
14000	14137A/14276	B-167
14000	14139/14276	B-169
15000	15100/15245	B-163
15000	15101/15243	B-163
15000	15102/15245	B-163
15000	15103/15245	B-163
15000	15106/15245	B-163
15000	15112/15245	B-165
15000	15116/15245	B-165
15000	15117/15245	B-165
15000	15118/15245	B-165
15000	15119/15245	B-165
15000	15120/15245	B-165
15000	15123/15245	B-165
15000	15125/15245	B-165
15000	15126/15245	B-167
15500	15580/15523	B-163
15500	15590/15520	B-163
15500	15590/15523	B-165
16000	16137/16284	B-167
17000	16150/16282	B-169
17000	17118/17244	B-165
17000	17119/17244	B-165
17500	17580/17520	B-161
18500	18590/18520	B-171
18600	18685/18620	B-173
18600	18690/18620	B-175
18700	18790/18720	B-177
18700	18790/18724	B-177
19000	19150/19281	B-169
21000	21075/21212	B-161
22700	22780/22720	B-173
23000	23100/23256	B-163
24700	24780/24720	B-171
25500	25572/25520	B-171
25500	25577/25520	B-173
25500	25578/25520	B-173
25500	25580/25520	B-173
25500	25582/25520	B-173
25500	25584/25520	B-175
25500	25590/25519	B-175
25500	25590/25520	B-175
25500	25590/25522	B-175
25500	25590/25526	B-175
25500	25592/25520	B-175
25800	25877/25820	B-167
25800	25877/25821	B-167
25800	25880/25821	B-169
26800	26878/26822	B-171
26800	26880/26822	B-171
26800	26882/26823	B-171
26800	26882/26824	B-173
26800	26883/26822	B-169
26800	26884/26822	B-173
26800	26885/26822	B-171
27600	27687/27620	B-189
27600	27689/27620	B-189
27600	27690/27620	B-189
27600	27691/27620	B-189
27800	27880/27820	B-171
28000	28150/28300	B-171

Inch series Tapered Roller Bearings (single row) index

Series number	Cone / cup number	Page of bearing dimension table
28000	28150/28315	B-171
28000	28158/28300	B-171
28500	28579/28521	B-177
28500	28580/28521	B-177
28500	28584/28521	B-179
28600	28678/28622	B-177
28600	28680/28622	B-181
28600	28682/28622	B-181
28900	28985/28921	B-183
28900	28990/28920	B-183
28900	28995/28920	B-183
29500	29585/29520	B-183
29500	29585/29521	B-183
29500	29586/29520	B-183
29500	29590/29520	B-185
29600	29675/29620	B-185
29600	29675/29630	B-185
29600	29685/29620	B-187
29600	29688/29620	B-187
LM29700	LM29748/LM29710	B-169
31500	31593/31520	B-169
31500	31594/31520	B-169
31500	31597/31520	B-169
33000	33225/33462	B-181
33000	33275/33462	B-185
33000	33281/33462	B-187
33000	33287/33462	B-187
33800	33885/33821	B-173
33800	33889/33821	B-177
33800	33890/33821	B-179
33800	33895/33822	B-179
34000	34274/34478	B-185
34000	34300/34478	B-187
34000	34301/34478	B-187
34000	34306/34478	B-189
36600	36690/36620	B-197
36900	36990/36920	B-197
37000	37425/37625	B-193
37000	37431/37625	B-193
39500	39575/39520	B-179
39500	39580/39520	B-181
39500	39581/39520	B-181
39500	39585/39520	B-183
39500	39590/39520	B-185
41000	41125/41286	B-165
42000	42346/42584	B-191
42000	42350/42584	B-191
42000	42368/42584	B-191
42000	42375/42584	B-193
42000	42381/42584	B-193
42600	42687/42620	B-187
42600	42690/42620	B-189
43000	43131/43312	B-167
44000	44143/44348	B-169
44000	44150/44348	B-171
44000	44158/44348	B-171
L44600	L44640/L44610	B-163
L44600	L44643/L44610	B-163
L44600	L44649/L44610	B-163
45200	45280/45220	B-175
45200	45282/45220	B-177
45200	45284/45220	B-179
45200	45287/45220	B-179
45200	45289/45220	B-181
L45400	L45449/L45410	B-165
46000	46162/46368	B-173
46000	46175/46368	B-173
46000	46780/46720	B-197
46000	46790/46720	B-197
47400	47487/47420	B-185
47400	47490/47420	B-187
47600	47678/47620	B-187
47600	47681/47620	B-189
47600	47686/47620	B-189
47800	47890/47820	B-191
47800	47896/47820	B-193
48200	48286/48220	B-195
48200	48290/48220	B-195
48300	48385/48320	B-197
48300	48393/48320	B-197
LM48500	LM48548/LM48510	B-167
LM48500	LM48548A/LM48510	B-167
48600	48684/48620	B-197
48600	48685/48620	B-197
49500	49585/49520	B-179
52000	52375/52618	B-193
52000	52387/52618	B-193
52000	52393/52618	B-193
52000	52400/52618	B-193
53000	53162/53375	B-173
53000	53177/53375	B-173
55000C	55175C/55437	B-175
55000C	55176C/55437	B-175
55000C	55187C/55437	B-177
55000C	55200C/55443	B-179
56000	56425/56650	B-193
59000	59200/59412	B-179
64000	64433/64700	B-195
64000	64450/64700	B-195
65000	65237/65500	B-183
65000	65390/65320	B-177
66000	66200/66462	B-179
66000	66225/66462	B-181
66000	66584/66520	B-179
66000	66589/66520	B-181
LM67000	LM67048/LM67010	B-165
67300	67388/67322	B-195
67300	67389/67322	B-195
67300	67390/67322	B-197
67300	67391/67322	B-197
67700	67790/67720	B-197
68000	68450/68712	B-195
68000	68462/68712	B-195
L68100	L68149/L68111	B-169
L69300	JL69349/JL69310	B-169
71000	71453/71750	B-195
72000	72188/72487	B-177
72000C	72200C/72487	B-179
72000C	72212C/72487	B-179
72000C	72218C/72487	B-181
72000C	72225C/72487	B-181
LM72800	LM72849/LM72810	B-163
74000	74500/74850	B-195
74000	74525/74850	B-197
74000	74550/74850	B-197
78000	78225/78551	B-181
78000	78250/78551	B-183
78000C	78214C/78551	B-179
LM78300	LM78349/LM78310C	B-169
LM78300	LM78349A/LM78310A	B-169
M84500	M84548/M84510	B-163
M86600	M86643/M86610	B-163
M86600	M86647/M86610	B-165
M86600	M86649/M86610	B-165
M88000	M88048/M88010	B-167
HM88500	JHM88540/JHM88513	B-165
HM88500	HM88542/HM88510	B-167
HM88500	HM88542/HM88512	B-167
HM88500	HM88547/HM88510	B-167
HM88600	HM88648/HM88610	B-169
HM88600	HM88648/HM88611AS	B-169
HM88600	HM88649/HM88610	B-167
HM89400	HM89440/HM89410	B-167
HM89400	HM89443/HM89410	B-167
HM89400	HM89444/HM89410	B-167
HM89400	HM89446/HM89410	B-169
HM89400	HM89448/HM89410	B-169
HM89400	HM89449/HM89410	B-169
HM89400	HM89449/HM89411	B-169
90000	J90354/J90748	B-191
90000	90381/90744	B-193
95000	95475/95925	B-195
95000	95500/95905	B-195
95000	95525/95925	B-197
97000	97500/97900	B-195
99000	99550/99100	B-197
99000	99575/99100	B-197
LM102900	LM102949/LM102910	B-175
LM104900	JLM104948/JLM104910	B-177
LM104900	LM104947A/LM104911	B-177
LM104900	LM104949/LM104911	B-177
M205100	JM205149/JM205110	B-177

Inch series Tapered Roller Bearings (single row) index

Series number	Cone / cup number	Page of bearing dimension table
M207000	JM207049/JM207010	B-181
H211700	JH211749/JH211710	B-185
HM212000	HM212044/HM212011	B-183
HM212000	HM212046/HM212011	B-183
HM212000	HM212049/HM21210	B-185
L217800	L217849/L217810	B-191
LL217800	LL217849/LL217810	B-191
HM218200	HM218248/HM218210	B-191
HH221400	HH221430/HH221410	B-189
HH221400	HH221431/HH221410	B-189
HH221400	HH221440/HH221410	B-193
HH221400	HH221449/HH221410	B-193
HH221400	HH221449A/HH221410	B-193
HH224300	HH224334/HH224310	B-193
HH224300	HH224335/HH224310	B-193
HH224300	HH224346/HH224310	B-195
HH228300	HH228349/HH228310	B-195
M231600	M231648/M231610	B-197
LM300800	LM300849/LM300811	B-171
H307700	JH307749/JH307710	B-181
HM318400	JHM318448/JHM318410	B-191
L319200	L319249/L319210	B-193
L327200	L327249/L327210	B-195
H414200	H414242/H414210	B-185
H414200	H414245/H414210	B-185
H414200	H414249/H414210	B-187
H415600	JH415647/JH415610	B-187
L432300	L432349/L432310	B-197
LM501300	LM501349/LM501310	B-171
LM501300	LM501349/LM501314	B-171
LM503300	LM503349A/LM503310	B-175
HH506300	HH506348/HH506310	B-177
HH506300	HH506349/HH506310	B-177
LM506800	JLM506849/JLM506810	B-179
LM508700	JLM508748/JLM508710	B-181
M511900	JM511946/JM511910	B-183
M515600	JM515649/JM515610	B-189
HM516400	HM516442/HM516410	B-187
HM516400	HM516448/HM516410	B-189
HM516800	JHM516849/JHM516810	B-191
LM522500	LM522546/LM522510	B-193
LM522500	LM522548/LM522510	B-195
HM522600	JHM522649/JHM522610	B-195
HM534100	JHM534149/JHM534110	B-197
LM603000	LM603049/LM603011	B-175
L610500	L610549/L610510	B-183
M612900	JM612949/JM612910	B-185
HM617000	HM617049/HM617010	B-191
L630300	L630349/L630310	B-197
LL639200	LL639249/L639210	B-197
LM704600	JLM704649/JLM704610	B-177
LM710900	JLM710949/JLM710910	B-183
LM714100	JLM714149/JLM714110	B-187
M714200	JM714249/JM714210	B-187

Series number	Cone / cup number	Page of bearing dimension table
H715300	H715334/H715311	B-183
H715300	H715343/H715311	B-185
H715300	H715345/H715311	B-187
H715300	H715348/H715311	B-189
M716600	JM716648/JM716610	B-191
M718100	JM718149/JM718110	B-191
M719100	JM719149/JM719113	B-191
M720200	JM720249/JM720210	B-193
L724300	JL724348/JL724314	B-195
M736100	JM736149/JM736110	B-197
M738200	JM738249/JM738210	B-197
HM801300	HM801346/HM801310	B-171
HM801300	HM801349/HM801310	B-171
M802000	M802048/M802011	B-173
HM803100	HM803145/HM803110	B-173
HM803100	HM803149/HM803110	B-173
M804000	M804048/M804010	B-175
M804800	M804846/M804810	B-175
M804800	M804848/M804810	B-177
M804800	M804849/M804810	B-177
HM804800	HM804840/HM804810	B-173
HM804800	HM804842/HM804810	B-173
LM806600	LM806649/LM806610	B-179
HM807000	HM807040/HM807010	B-175
HM807000	HM807044/HM807010	B-177
HM807000	HM807046/HM807010	B-177
HM807000	HM807048/HM807010	B-179
HM807000	HM807049/HM807010	B-179
HM807000	JHM807045/JHM807012	B-177
L812100	L812148/L812111	B-185
LM813000	JLM813049/JLM813010	B-185
HM813800	HM813840/HM813810	B-181
HM813800	HM813841/HM813810	B-183
HM813800	HM813842/HM813810	B-183
HM813800	HM813844/HM813810	B-185
L814700	L814749/L814710	B-187
LM814800	LM814849/LM814810	B-189
M822000	JM822049/JM822010	B-195
HM903200	HM903245/HM903210	B-173
HM903200	HM903249/HM903210	B-173
M903300	M903345/M903310	B-173
HM907600	HM907643/HM907614	B-179
HM911200	HM911242/HM911210	B-179
HM911200	HM911245/HM911210	B-183
HM911200	HM911244/JHM911211	B-183
H913800	H913840/H913810	B-181
H913800	H913842/H913810	B-183
H913800	JH913848/JH913811	B-187
H917800	H917840/H917810	B-189
H924000	H924045/H924010	B-195
HM926700	HM926740/HM926710	B-195
HM926700	HM926747/HM926710	B-195

Inch series Tapered Roller Bearings (four row) index

Series number	Cone / cup number	Page of bearing dimension table
8500	T-8576D/8520/8520D	B-219
46700	46791D/46720/46721D	B-217
48200	T-48290D/48220/48220D	B-217
48300	T-48393D/48320/48320D	B-217
48600	T-48680D/48620/48620D	B-217
67700	67791D/67720/67721D	B-217
67800	T-67885D/67820/67820D	B-219
81000	81576D/81962/81963D	B-217
82600	82681D/82620/82620D	B-217
126000	EE126096D/126150/126151D	B-219
127000	EE127097D/127137/127137D	B-219
132000	EE132082D/132125/132126D	B-219
134000	EE134102D/134143/134144D	B-221
L163100	L163149D/L163110/L163110D	B-223
170000	EE171000D/171450/17145D	B-219
220000	EE221027D/221575/221576D	B-221
M224700	M224749D/M224710/M224710D	B-217
M231600	T-M231649D/M231610/M231610D	B-217
M238800	M238849D/M238810/M238810D	B-217
M241500	M241538D/M241510/M241510D	B-219
M244200	T-M244249D/M244210/M244210D	B-219
LM247700	LM247748D/LM247710/LM247710DA	B-219
M249700	T-M249748D/M249710/M249710D	B-219
HM252300	HM252349D/HM252310/HM252310D	B-221
M252300	T-M252349D/M252310/M252310D	B-221
M255400	M255449D/M255410/M255410DA	B-221
HM256800	T-HM256849D/HM256810/HM256810DG2	B-221
M257100	M257149D/M257110/M257110D	B-221
M257200	M257248D/M257210/M257210D	B-223
LM258600	LM258649D/LM258610/LM258610D	B-223
HM259000	T-HM259049D/HM259010/HM259010D	B-223
HM261000	HM261049D/HM261010/HM261010DA	B-223
M262400	M262449D/M262410/M262410D	B-223
HM262700	T-HM262749D/HM262710/HM262710DG2	B-223
LM263100	LM263149D/LM263110/LM263110D	B-223
M263300	M263349D/M263310/M263310D	B-223
HM265000	HM265049D/HM265010/HM265010D	B-225
HM266400	T-HM266449D/HM266410/HM266410DG2	B-225
M268700	T-M268749D/M268710/M268710DG2	B-225
M270700	M270749D/M270710/M270710DAG2	B-225
LM272200	LM272249D/LM272210/LM272210DG2	B-227
M274100	M274149D/M274110/M274110DG2	B-227
LM274400	LM274449D/LM274410/LM274410D	B-227
275000	EE275106D/275155/275156D	B-221
275000	EE275109D/275160/275161D	B-221
M275300	M275349D/M275310/M275310DG2	B-227
M276400	M276449D/M276410/M276410DG2	B-227
M278700	M278749D/M278710/M278710DAG2	B-227
LM278800	LM278849D/LM278710/LM278710D	B-229
280000	EE280700D/281200/281201D	B-217
M280000	M280049D/M280010/M280010DG2	B-229
L281100	L281149D/L281110/L281110DG2	B-229
M281600	M281649D/M281610/M281610DG2	B-229
LM281800	LM281849D/LM281810/LM281810DG2	B-229
M282200	M282249D/M282210/M282210DG2	B-229
M283400	M283449D/M283410/M283410DG2	B-229
LM283600	LM283649D/LM283610/LM283610DG2	B-229
M284200	M284249D/M284210/M284210DG2	B-229
M285800	M285848D/M285810/M288510DG2	B-229
LM286200	LM286249D/LM286210/LM286210DG2	B-231
LM287600	LM287649D/LM2876100/LM287610DG2	B-231
LM288900	LM288949D/LM288910/LM288910DG2	B-231
290000	EE291202D/291750/291751D	B-221
329000	EE329119D/329172/329173D	B-221
LM377400	LM377449D/LM377410/LM377410DG2	B-227
LM451300	T-LM451349D/LM451310/LM451310D	B-221
526000	EE526131D/526190/52619D	B-223
547000	EE547341D/547480/547481DG2	B-231
640000	T-EE640193D/640260/640261DG2	B-227
649000	EE649241D/649310/649311DG2	B-229

Inch series Tapered Roller Bearings (four row) index

Series number	Cone / cup number	Page of bearing dimension table
LM654600	T-LM654644D／LM654610／LM654610D	B-221
LM654600	T-LM654648D／LM654610／LM654610D	B-221
655000	EE655271D／655345／655346DG2	B-229
LM665900	LM665949D／LM665910／LM665910D	B-225
M667900	M667947D／M667911／M667911DG2	B-225
700000	EE700090D／700167／700168D	B-219
LM742700	T-LM742749D／LM742714／LM742714D	B-219
755000	EE755281D／755360／755361DG2	B-229
M757400	M757448D／M757410／M757410D	B-221
M757400	M757449D／M757410／M757410D	B-223
LM761600	LM761648D／LM761610／LM761610D	B-223
LM761600	LM761649D／LM761610／LM761610D	B-223
LM763400	LM763449D／LM763410／LM763410D	B-223
LM765100	LM765149D／LM765110／LM765110D	B-225
LM767700	LM767745D／LM767710／LM767710D	B-225
LM767700	LM767749D／LM767710／LM767710D	B-225
LM769300	LM769349D／LM769310／LM769310D	B-225
L770800	L770849D／L770810／L770810DG2	B-227
LM772700	LM772749D／LM772710／LM772710DA	B-227
LM778500	LM778549D／LM778510／LM778510DG2	B-229
822000	EE822101D／822175／822176D	B-219
833000	EE833161D／833232／833233D	B-225
843000	EE843221D／843290／843291D	B-227
LM869400	T-LM869449D／LM869410／LM869410DG2	B-225
910000	EE911603D／912400／912401D	B-225
920000	EE921150D／921875／921876D	B-221
970000	EE971355D／972100／972103D	B-223

Metric series

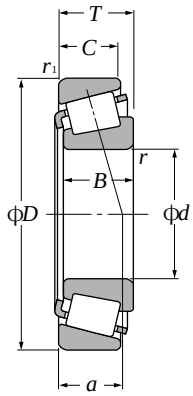

d 15～30mm

Boundary dimensions							Basic load ratings				Limiting speeds		Bearing numbers
							dynamic	static	dynamic	static			
		mm					kN		kgf		min^{-1}		
d	D	T	B	C	$r_{s\,min}$ 1)	$r_{ls\,min}$ 1)	C_r	C_{or}	C_r	C_{or}	grease	oil	
15	42	14.25	13	11	1	1	23.2	20.8	2 370	2 120	9 900	13 000	**4T-30302**
17	40	13.25	12	11	1	1	20.5	20.3	2 090	2 070	9 900	13 000	**4T-30203**
	40	17.25	16	14	1	1	27.3	28.3	2 790	2 880	9 900	13 000	**4T-32203**
	40	17.25	16	14	1	1	26.2	28.2	2 670	2 870	9 900	13 000	**4T-32203R** 2)
	47	15.25	14	12	1	1	28.9	26.3	2 940	2 680	9 000	12 000	**4T-30303**
20	42	15	15	12	0.6	0.6	24.9	27.9	2 540	2 840	9 500	13 000	**4T-32004X**
	47	15.25	14	12	1	1	28.2	28.7	2 870	2 930	8 800	12 000	**4T-30204**
	47	19.25	18	15	1	1	36.5	39.5	3 700	4 000	8 800	12 000	**4T-32204**
	52	16.25	16	13	1.5	1.5	35.5	34.0	3 600	3 450	8 000	11 000	**4T-30304A**
	52	16.25	16	12	1.5	1.5	31.0	31.0	3 150	3 150	7 600	10 000	**4T-30304CA**
	52	22.25	21	18	1.5	1.5	46.5	48.5	4 750	4 950	8 000	11 000	**4T-32304**
22	44	15	15	11.5	0.6	0.6	27.0	31.5	2 760	3 250	8 900	12 000	**4T-320/22X**
25	47	15	15	11.5	0.6	0.6	27.8	33.5	2 830	3 450	7 900	11 000	**4T-32005X**
	47	17	17	14	0.6	0.6	32.5	40.5	3 300	4 150	8 000	11 000	**4T-33005**
	52	16.25	15	13	1	1	31.5	34.0	3 200	3 450	7 300	9 800	**4T-30205**
	52	19.25	18	16	1	1	42.0	47.0	4 300	4 800	7 300	9 800	**4T-32205**
	52	19.25	18	15	1	1	38.0	43.0	3 850	4 400	7 300	9 800	**4T-32205R** 2)
	52	19.25	18	15	1	1	38.0	46.5	3 900	4 750	7 100	9 400	**4T-32205C**
	52	19.25	18	15	1	1	34.5	42.0	3 500	4 250	7 100	9 400	**4T-32205CR** 2)
	52	22	22	18	1	1	47.5	57.5	4 850	5 850	7 300	9 800	**4T-33205**
	62	18.25	17	15	1.5	1.5	48.5	47.5	4 950	4 850	6 700	8 900	**4T-30305**
	62	18.25	17	14	1.5	1.5	41.5	41.5	4 250	4 250	6 400	8 500	**4T-30305C**
	62	18.25	17	13	1.5	1.5	40.5	43.5	4 150	4 450	5 900	7 800	**4T-30305D**
	62	25.25	24	20	1.5	1.5	61.5	64.5	6 250	6 600	6 700	8 900	**4T-32305**
28	52	16	16	12	1	1	33.0	40.5	3 400	4 150	7 300	9 700	**4T-320/28X**
	58	24	24	19	1	1	58.0	69.5	5 950	7 100	6 700	8 900	**4T-332/28**
30	55	17	17	13	1	1	37.5	46.0	3 800	4 700	6 900	9 200	**4T-32006X**
	55	20	20	16	1	1	42.5	54.0	4 300	5 500	6 900	9 200	**4T-33006**
	62	17.25	16	14	1	1	43.5	48.0	4 450	4 900	6 300	8 400	**4T-30206**
	62	21.25	20	17	1	1	54.5	64.0	5 600	6 550	6 300	8 400	**4T-32206**
	62	21.25	20	17	1	1	50.0	60.0	5 100	6 100	6 100	8 100	**4T-32206C**
	62	25	25	19.5	1	1	65.0	77.0	6 600	7 850	6 300	8 400	**4T-33206**
	72	20.75	19	16	1.5	1.5	60.0	61.0	6 100	6 200	5 700	7 600	**4T-30306**

1) Minimal allowable dimension for chamfer dimension r or r_1.
2) This bearing does not incorporate the subunit dimensions.

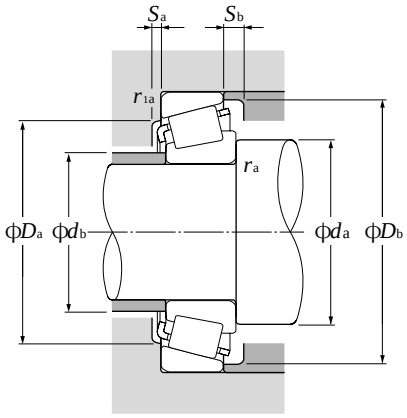

Equivalent radial load

dynamic

$P_r = XF_r + YF_a$

$\frac{F_a}{F_r} \leqq e$		$\frac{F_a}{F_r} > e$	
X	Y	X	Y
1	0	0.4	Y_2

static

$P_{or} = 0.5F_r + Y_o F_a$

When $P_{or} < F_r$ use $P_{or} = F_r$

For values of e, Y_2 and Y_o see the table below.

Dimensions series to ISO	Abutment and fillet dimensions mm									Load center mm	Constant	Axial load factors		Mass kg
	d_a min	d_b max	D_a max	D_a min	D_b min	S_a min	S_b min	r_{as} max	r_{1as} max	a	e	Y_2	Y_o	(approx.)
2FB	20.5	22	36.5	35	38	2	3	1	1	9.5	0.29	2.11	1.16	0.098
2DB	22.5	23	34.5	33	37	2	2	1	1	9.5	0.35	1.74	0.96	0.08
2DD	22.5	23	34.5	33	37	2	3	1	1	11.5	0.31	1.92	1.06	0.102
	22.5	22	34.5	33	36.5	2	3	1	1	11	0.35	1.74	0.96	0.104
2FB	22.5	24	41.5	40	42	3	3.5	1	1	10.5	0.29	2.11	1.16	0.134
3CC	24.5	25	37.5	36	39	3	3	0.6	0.6	10.5	0.37	1.60	0.88	0.097
2DB	25.5	27	41.5	40	44	2	3	1	1	11.5	0.35	1.74	0.96	0.127
2DD	25.5	26	41.5	39	43	2	4	1	1	12.5	0.33	1.81	1.00	0.16
2FB	28.5	28	43.5	42.5	47.5	3	3	1.5	1.5	10.5	0.30	2.00	1.10	0.176
	28.5	27.5	43.5	39.5	48	3	4	1.5	1.5	13.5	0.55	1.10	0.60	0.17
2FD	28.5	27	43.5	43	47	3	4	1.5	1.5	14	0.30	2.00	1.10	0.245
3CC	26.5	27	39.5	38	41	3	3.5	0.6	0.6	11	0.40	1.51	0.83	0.106
4CC	29.5	30	42.5	40	44	3	3.5	0.6	0.6	12	0.43	1.39	0.77	0.114
2CE	29.5	29	42.5	40	43.5	3	3	0.6	0.6	11	0.29	2.07	1.14	0.13
3CC	30.5	31	46.5	44	48	2	3	1	1	12.5	0.37	1.60	0.88	0.154
2CD	30.5	31	46.5	43	48	2	4	1	1	14	0.36	1.67	0.92	0.187
	30.5	31	46.5	43	48	2	4	1	1	13.5	0.37	1.60	0.88	0.181
5CD	30.5	30	46.5	42	49	2	4	1	1	16	0.58	1.03	0.57	0.19
	30.5	30	46.5	42	49	2	4	1	1	16	0.55	1.10	0.60	0.19
2DE	30.5	30	46.5	43	49	4	4	1	1	14	0.35	1.71	0.94	0.217
2FB	33.5	34	53.5	52	57	3	3	1.5	1.5	13	0.30	2.00	1.10	0.272
	33.5	34	53.5	48	58	3	4	1.5	1.5	16	0.55	1.10	0.60	0.264
7FB	33.5	34	53.5	45.5	58.5	3	5	1.5	1.5	20	0.83	0.73	0.40	0.284
2FD	33.5	32	53.5	52	57	3	5	1.5	1.5	16	0.30	2.00	1.10	0.381
4CC	33.5	33	46.5	45	49	3	4	1	1	12.5	0.43	1.39	0.77	0.146
2DE	33.5	34	52.5	49	55	5	5	1	1	15.5	0.34	1.77	0.97	0.293
4CC	35.5	35	49.5	48	52	3	4	1	1	13.5	0.43	1.39	0.77	0.166
2CE	35.5	35.5	49.5	46.5	52	3	4	1	1	13	0.29	2.06	1.13	0.201
3DB	35.5	37	56.5	53	57	2	3	1	1	13.5	0.37	1.60	0.88	0.241
3DC	35.5	37	56.5	52	58	2.5	4	1	1	15.5	0.37	1.60	0.88	0.301
5DC	35.5	35	56.5	49	59.5	2	5	1	1	18.5	0.56	1.07	0.59	0.294
2DE	35.5	36	56.5	53	59	5	5.5	1	1	16	0.34	1.76	0.97	0.344
2FB	38.5	40	63.5	62	66	3	4.5	1.5	1.5	15	0.31	1.90	1.05	0.408

Metric series

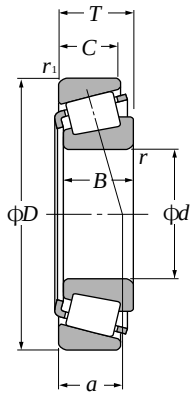

d 30～45mm

Boundary dimensions							Basic load ratings				Limiting speeds		Bearing numbers
							dynamic	static	dynamic	static			
		mm					kN		kgf		min-1		
d	D	T	B	C	$r_{s\,min}$ 1)	$r_{1s\,min}$ 1)	C_r	C_{or}	C_r	C_{or}	grease	oil	
30	72	20.75	19	15	1.5	1.5	58.5	58.5	6 000	5 950	5 500	7 300	**4T-30306CA**
	72	20.75	19	14	1.5	1.5	48.5	51.5	4 950	5 250	5 000	6 700	**4T-30306D**
	72	28.75	27	23	1.5	1.5	81.0	90.0	8 250	9 150	5 700	7 600	**4T-32306**
	72	28.75	27	23	1.5	1.5	79.0	94.0	8 050	9 550	5 500	7 300	＊ **4T-32306C**
	72	28.75	27	23	1.5	1.5	70.0	88.5	7 150	9 050	5 500	7 300	**4T-32306CR** 2)
32	58	17	17	13	1	1	37.0	46.5	3 750	4 750	6 600	8 700	**4T-320/32X**
	65	26	26	20.5	1	1	70.5	85.0	7 200	8 650	6 000	8 000	**4T-332/32**
	75	29.75	28	23	1.5	1.5	84.0	102	8 600	10 400	5 200	6 900	**4T-323/32C**
35	55	14	14	11.5	0.6	0.6	27.4	37.5	2 790	3 850	6 800	9 000	**32907XU**
	62	18	18	14	1	1	41.5	52.5	4 250	5 350	6 100	8 100	**4T-32007X**
	62	21	21	17	1	1	50.5	66.5	5 150	6 800	6 100	8 100	**4T-33007**
	72	18.25	17	15	1.5	1.5	55.5	61.5	5 650	6 250	5 500	7 400	**4T-30207**
	72	24.25	23	19	1.5	1.5	72.5	87.0	7 400	8 900	5 500	7 400	**4T-32207**
	72	24.25	23	19	1.5	1.5	68.0	85.5	6 950	8 750	5 300	7 100	**4T-32207C**
	72	24.25	23	18	1.5	1.5	62.0	78.5	6 300	8 000	5 300	7 100	**4T-32207CR** 2)
	72	28	28	22	1.5	1.5	87.5	109	8 900	11 200	5 500	7 400	**4T-33207**
	80	22.75	21	18	2	1.5	75.0	77.0	7 650	7 900	5 000	6 600	**4T-30307**
	80	22.75	21	17	2	1.5	66.5	68.5	6 750	7 000	4 800	6 400	**4T-30307C**
	80	22.75	21	15	2	1.5	63.5	70.0	6 450	7 100	4 400	5 800	**4T-30307D**
	80	32.75	31	25	2	1.5	101	115	10 300	11 700	5 000	6 600	**4T-32307**
	80	32.75	31	25	2	1.5	93.0	117	9 500	12 000	4 800	6 400	**4T-32307C**
40	62	15	15	12	0.6	0.6	32.5	48.0	3 350	4 900	5 900	7 800	**32908XU**
	68	19	19	14.5	1	1	50.0	65.5	5 100	6 650	5 300	7 100	**4T-32008X**
	68	22	22	18	1	1	59.5	82.5	6 050	8 400	5 300	7 100	**4T-33008**
	75	26	26	20.5	1.5	1.5	79.5	103	8 100	10 500	5 200	6 900	**4T-33108**
	80	19.75	18	16	1.5	1.5	61.0	67.0	6 250	6 850	4 900	6 600	**4T-30208**
	80	24.75	23	19	1.5	1.5	79.5	93.5	8 100	9 550	4 900	6 600	**4T-32208**
	80	32	32	25	1.5	1.5	103	132	10 500	13 400	4 900	6 600	**4T-33208**
	85	33	32.5	28	2.5	2	118	144	12 000	14 700	4 600	6 200	**4T-T2EE040**
	90	25.25	23	20	2	1.5	91.5	102	9 350	10 400	4 400	5 900	**4T-30308**
	90	25.25	23	19	2	1.5	83.0	87.0	8 450	8 900	4 200	5 600	**4T-30308C**
	90	25.25	23	17	2	1.5	77.0	85.5	7 850	8 700	3 900	5 200	**4T-30308D**
	90	35.25	33	27	2	1.5	122	150	12 500	15 300	4 400	5 900	**32308U**
	90	35.25	33	27	2	1.5	110	140	11 300	14 300	4 200	5 600	**4T-32308C**
45	68	15	15	12	0.6	0.6	33.5	51.5	3 450	5 250	5 300	7 000	＊ **32909XU**

1）Minimal allowable dimension for chamfer dimension r or r_1.　2）This bearing does not incorporate the subunit dimensions.
Note: When selecting bearings with bearing numbers marked with " ＊ ", please consult NTN Engineering.

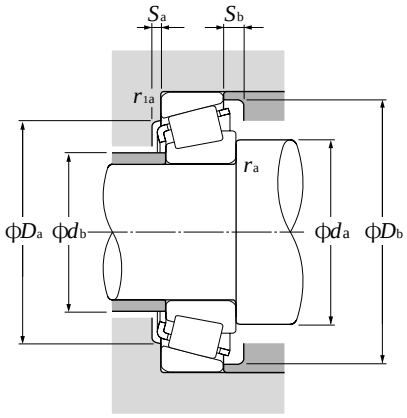

Equivalent radial load

dynamic

$P_r = XF_r + YF_a$

$\frac{F_a}{F_r} \leqq e$		$\frac{F_a}{F_r} > e$	
X	Y	X	Y
1	0	0.4	Y_2

static

$P_{or} = 0.5F_r + Y_oF_a$

When $P_{or} < F_r$ use $P_{or} = F_r$

For values of e, Y_2 and Y_o see the table below.

Dimensions series to ISO	Abutment and fillet dimensions mm									Load center mm	Constant	Axial load factors		Mass kg
	d_a min	d_b max	D_a max	D_a min	D_b min	S_a min	S_b min	r_{as} max	r_{1as} max	a	e	Y_2	Y_o	(approx.)
	38.5	39.5	63.5	57	67	3	5.5	1.5	1.5	17.5	0.47	1.27	0.70	0.398
7FB	38.5	39	63.5	55	68	3	6.5	1.5	1.5	23.5	0.83	0.73	0.40	0.398
2FD	38.5	38	63.5	59	66	3	5.5	1.5	1.5	18.5	0.31	1.90	1.05	0.583
5FD	38.5	37	63.5	57	68	2	5.5	1.5	1.5	23	0.55	1.10	0.60	0.592
	38.5	37	63.5	57	67.5	2	5.5	1.5	1.5	23	0.61	0.99	0.54	0.594
4CC	37.5	38	52.5	50	55	3	4	1	1	14.5	0.45	1.32	0.73	0.181
2DE	37.5	38	59.5	55	62	5	5.5	1	1	17	0.35	1.73	0.95	0.395
5FD	40.5	39	66.5	61	71	3	6.5	1.5	1.5	23	0.55	1.10	0.60	0.659
2BD	39.5	40	50.5	48	52.5	2.5	2.5	0.6	0.6	10.5	0.29	2.06	1.13	0.121
4CC	40.5	40	56.5	54	59	4	4	1	1	15.5	0.45	1.32	0.73	0.224
2CE	40.5	40.5	56.5	52	59	3	4	1	1	14	0.31	1.97	1.08	0.263
3DB	43.5	44	63.5	62	67	3	3	1.5	1.5	15	0.37	1.60	0.88	0.344
3DC	43.5	43	63.5	61	67	3	5	1.5	1.5	17.5	0.37	1.60	0.88	0.457
5DC	43.5	42	63.5	59	68	3	6	1.5	1.5	21.5	0.58	1.03	0.57	0.461
	43.5	42	63.5	59	68	3	6	1.5	1.5	20.5	0.55	1.10	0.60	0.461
2DE	43.5	42	63.5	61	68	5	6	1.5	1.5	18.5	0.35	1.70	0.93	0.531
2FB	45	45	71.5	70	74	3	4.5	2	1.5	17	0.31	1.90	1.05	0.540
	45	44	71.5	63.5	75.5	3	5.5	2	1.5	20.5	0.55	1.10	0.60	0.517
7FB	45	44	71.5	62	76.5	3	7.5	2	1.5	26	0.83	0.73	0.40	0.530
2FE	45	43	71.5	66	74	3	7.5	2	1.5	20.5	0.31	1.90	1.05	0.787
5FE	45	43	71.5	66	76	3	7.5	2	1.5	25	0.55	1.10	0.60	0.797
2BC	44.5	45.5	57.5	54	58.5	3	3	0.6	0.6	11.5	0.29	2.07	1.14	0.161
3CD	45.5	46	62.5	60	65	4	4.5	1	1	15	0.38	1.58	0.87	0.273
2BE	45.5	46	62.5	60	64	2.5	4	1	1	15	0.28	2.12	1.17	0.312
2CE	48.5	47	66.5	65	71	4	5.5	1.5	1.5	18	0.36	1.69	0.93	0.494
3DB	48.5	49	71.5	69	75	3	3.5	1.5	1.5	16.5	0.37	1.60	0.88	0.435
3DC	48.5	48	71.5	68	75	3	5.5	1.5	1.5	19	0.37	1.60	0.88	0.558
2DE	48.5	47	71.5	67	76	5	7	1.5	1.5	21	0.36	1.68	0.92	0.728
2EE	52	48	75	70	80	5	5	2	2	22.5	0.34	1.74	0.96	0.907
2FB	50	52	81.5	77	82	3	5	2	1.5	19.5	0.35	1.74	0.96	0.769
	50	50	80	72	85.5	3.5	6	2	1.5	23	0.55	1.10	0.60	0.728
7FB	50	50	81.5	71	86.5	3	8	2	1.5	29.5	0.83	0.73	0.40	0.738
2FD	50	50	81.5	73	82	3	8	2	1.5	23	0.35	1.74	0.96	1.08
5FD	50	48	81.5	72	84	3	8	2	1.5	27.5	0.55	1.10	0.60	1.1
2BC	50	50	63.5	59.5	64.5	3	3	0.6	0.6	12	0.32	1.88	1.04	0.188

Metric series

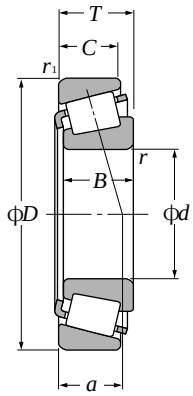

d 45～60mm

Boundary dimensions							Basic load ratings				Limiting speeds		Bearing numbers
							dynamic	static	dynamic	static			
			mm				kN		kgf		min^{-1}		
d	D	T	B	C	$r_{s\,min}$ 1)	$r_{1s\,min}$ 1)	C_r	C_{or}	C_r	C_{or}	grease	oil	
45	75	20	20	15.5	1	1	57.5	76.5	5 850	7 800	4 800	6 400	**4T-32009X**
	75	24	24	19	1	1	66.0	93.5	6 750	9 550	4 800	6 400	**4T-33009**
	80	26	26	20.5	1.5	1.5	84.5	115	8 650	11 700	4 700	6 200	**4T-33109**
	85	20.75	19	16	1.5	1.5	67.5	78.5	6 900	8 000	4 400	5 900	**4T-30209**
	85	24.75	23	19	1.5	1.5	82.0	100	8 350	10 200	4 400	5 900	**4T-32209**
	85	32	32	25	1.5	1.5	107	141	10 900	14 400	4 400	5 900	**4T-33209**
	100	27.25	25	22	2	1.5	111	126	11 300	12 800	4 000	5 300	**4T-30309**
	100	27.25	25	18	2	1.5	96.0	109	9 800	11 100	3 500	4 600	**4T-30309D**
	100	38.25	36	30	2	1.5	154	191	15 700	19 500	4 000	5 300	**32309U**
50	72	15	15	12	0.6	0.6	35.5	57.0	3 650	5 800	4 700	6 300	∗ **32910XU**
	72	15	14	12	0.6	0.6	31.5	50.5	3 200	5 150	4 700	6 300	**32910** 2)
	80	20	20	15.5	1	1	62.5	88.0	6 400	9 000	4 400	5 800	**4T-32010X**
	80	24	24	19	1	1	69.5	103	7 100	10 500	4 400	5 800	**4T-33010**
	85	26	26	20	1.5	1.5	86.5	121	8 850	12 400	4 200	5 600	**4T-33110**
	90	21.75	20	17	1.5	1.5	77.0	93.0	7 850	9 450	4 000	5 300	**4T-30210**
	90	24.75	23	19	1.5	1.5	87.5	109	8 900	11 100	4 000	5 300	**4T-32210**
	90	32	32	24.5	1.5	1.5	115	158	11 700	16 100	4 000	5 300	**4T-33210**
	100	36	35	30	2.5	2.5	151	190	15 400	19 400	3 800	5 100	**4T-T2ED050**
	105	32	29	22	3	3	107	132	10 900	13 500	3 400	4 500	**4T-T7FC050**
	110	29.25	27	23	2.5	2	133	152	13 500	15 500	3 600	4 800	**4T-30310**
	110	29.25	27	19	2.5	2	113	130	11 600	13 300	3 200	4 200	**4T-30310D**
	110	42.25	40	33	2.5	2	184	232	18 700	23 600	3 600	4 800	**32310U**
55	80	17	17	14	1	1	44.5	73.5	4 550	7 500	4 300	5 700	**32911XU**
	90	23	23	17.5	1.5	1.5	80.5	118	8 200	12 000	4 000	5 400	**4T-32011X**
	90	27	27	21	1.5	1.5	91.5	138	9 350	14 100	4 000	5 400	**4T-33011**
	95	30	30	23	1.5	1.5	111	155	11 300	15 800	3 900	5 200	**4T-33111**
	100	22.75	21	18	2	1.5	93.0	111	9 500	11 300	3 600	4 900	**4T-30211**
	100	26.75	25	21	2	1.5	108	134	11 000	13 700	3 600	4 900	**4T-32211**
	100	35	35	27	2	1.5	138	188	14 100	19 100	3 600	4 900	**4T-33211**
	120	31.5	29	25	2.5	2	155	179	15 800	18 300	3 300	4 400	**4T-30311**
	120	31.5	29	21	2.5	2	132	154	13 500	15 700	2 900	3 800	**4T-30311D**
	120	45.5	43	35	2.5	2	215	275	21 900	28 000	3 300	4 400	**32311U**
60	85	17	17	14	1	1	51.0	83.0	5 200	8 450	4 000	5 300	**32912XA** 2)
	95	23	23	17.5	1.5	1.5	82.0	123	8 350	12 500	3 700	4 900	**4T-32012X**
	95	27	27	21	1.5	1.5	93.5	145	9 550	14 700	3 700	4 900	**4T-33012**
	100	30	30	23	1.5	1.5	113	164	11 600	16 700	3 600	4 700	**4T-33112**

1) Minimal allowable dimension for chamfer dimension r or r_1.
2) This bearing does not incorporate the subunit dimensions.

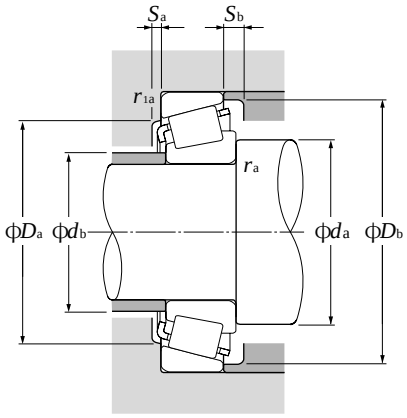

Equivalent radial load

dynamic

$P_r = XF_r + YF_a$

$\frac{F_a}{F_r} \leqq e$		$\frac{F_a}{F_r} > e$	
X	Y	X	Y
1	0	0.4	Y_2

static

$P_{or} = 0.5F_r + Y_oF_a$

When $P_{or} < F_r$ use $P_{or} = F_r$

For values of e, Y_2 and Y_o see the table below.

Dimensions series to ISO	Abutment and fillet dimensions mm									Load center mm	Constant	Axial load factors		Mass kg
	d_a min	d_b max	D_a max	D_a min	D_b min	S_a min	S_b min	r_{as} max	r_{1as} max	a	e	Y_2	Y_o	(approx.)
3CC	50.5	51	69.5	67	72	4	4.5	1	1	16.5	0.39	1.53	0.84	0.346
2CE	50.5	51	69.5	67	71	4	5	1	1	16	0.29	2.04	1.12	0.398
3CE	53.5	52	71.5	69	77	4	5.5	1.5	1.5	19.5	0.38	1.57	0.86	0.542
3DB	53.5	54	76.5	74	80	3	4.5	1.5	1.5	18	0.40	1.48	0.81	0.495
3DC	53.5	53	76.5	73	81	3	5.5	1.5	1.5	20	0.40	1.48	0.81	0.607
3DE	53.5	52	76.5	72	81	5	7	1.5	1.5	22	0.39	1.56	0.86	0.783
2FB	55	59	91.5	86	93	3	5	2	1.5	21	0.35	1.74	0.96	1.01
7FB	55	56	91.5	79	96	3	9	2	1.5	32.5	0.83	0.73	0.40	0.958
2FD	55	56	91.5	82	93	3	8	2	1.5	25.5	0.35	1.74	0.96	1.46
2BC	54.5	55	67.5	63.5	69	3	3	0.6	0.6	13.5	0.34	1.76	0.97	0.191
	54.5	55	67.5	63.5	69.5	3	3	0.6	0.6	14.5	0.36	1.67	0.92	0.192
3CC	55.5	56	74.5	72	77	4	4.5	1	1	17.5	0.42	1.42	0.78	0.366
2CE	55.5	56	74.5	72	76	4	5	1	1	17.5	0.32	1.90	1.04	0.433
3CE	58.5	56	76.5	74	82	4	6	1.5	1.5	20.5	0.41	1.46	0.80	0.58
3DB	58.5	58	81.5	79	85	3	4.5	1.5	1.5	19.5	0.42	1.43	0.79	0.563
3DC	58.5	58	81.5	78	85	3	5.5	1.5	1.5	21	0.42	1.43	0.79	0.648
3DE	58.5	57	81.5	77	87	5	7.5	1.5	1.5	23.5	0.41	1.45	0.80	0.852
2ED	62	59	88	84	94	6	6	2	2	25.5	0.34	1.75	0.96	1.31
7FC	64	60	91	78	100	4	10	2.5	2.5	36.5	0.87	0.69	0.38	1.23
2FB	62	65	100	95	102	3	6	2	2	23	0.35	1.74	0.96	1.31
7FB	62	62	100	87	105	3	10	2	2	35	0.83	0.73	0.40	1.25
2FD	62	62	100	90	102	3	9	2	2	28.5	0.35	1.74	0.96	1.92
2BC	60.5	60.5	74.5	70.5	76.5	3	3	1	1	14.5	0.31	1.94	1.07	0.274
3CC	63.5	63	81.5	81	86	4	5.5	1.5	1.5	20	0.41	1.48	0.81	0.563
2CE	63.5	63	81.5	81	86	5	6	1.5	1.5	19.5	0.31	1.92	1.06	0.643
3CE	63.5	62	86.5	83	91	5	7	1.5	1.5	22	0.37	1.60	0.88	0.846
3DB	65	64	91.5	88	94	4	4.5	2	1.5	21	0.40	1.48	0.81	0.74
3DC	65	63	91.5	87	95	4	5.5	2	1.5	22.5	0.40	1.48	0.81	0.876
3DE	65	62	91.5	85	96	6	8	2	1.5	25.5	0.40	1.50	0.83	1.15
2FB	67	71	110	104	111	4	6.5	2	2	24.5	0.35	1.74	0.96	1.66
7FB	67	68	110	94	113	4	10.5	2	2	38	0.83	0.73	0.40	1.59
2FD	67	68	110	99	111	4	10.5	2	2	30.5	0.35	1.74	0.96	2.44
	65.5	65.5	79.5	76.5	82	3	3	1	1	15.5	0.33	1.80	0.99	0.296
4CC	68.5	67	86.5	85	91	4	5.5	1.5	1.5	21	0.43	1.39	0.77	0.576
2CE	68.5	67	86.5	85	90	5	6	1.5	1.5	20.5	0.33	1.83	1.01	0.684
3CE	68.5	67	91.5	88	96	5	7	1.5	1.5	23.5	0.40	1.51	0.83	0.912

Note: When selecting bearings with bearing numbers marked with " ∗ ", please consult NTN Engineering.

Metric series

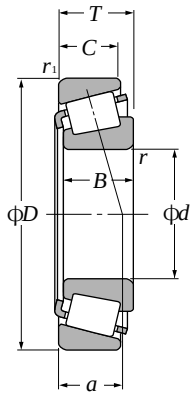

d 60～75mm

Boundary dimensions							Basic load ratings				Limiting speeds		Bearing numbers
							dynamic	static	dynamic	static			
			mm				kN		kgf		min^{-1}		
d	D	T	B	C	$r_{s\,min}$ 1)	$r_{ls\,min}$ 1)	C_r	C_{or}	C_r	C_{or}	grease	oil	
60	110	23.75	22	19	2	1.5	105	125	10 700	12 700	3 400	4 500	**4T-30212**
	110	29.75	28	24	2	1.5	130	164	13 200	16 800	3 400	4 500	**32212U**
	110	38	38	29	2	1.5	161	223	16 400	22 700	3 400	4 500	**33212U**
	115	40	39	33	2.5	2.5	188	249	19 200	25 400	3 200	4 300	**4T-T2EE060**
	125	37	33.5	26	3	3	145	186	14 800	18 900	2 800	3 700	**4T-T7FC060**
	130	33.5	31	26	3	2.5	180	210	18 300	21 400	3 000	4 000	**30312U**
	130	33.5	31	22	3	2.5	150	176	15 300	17 900	2 700	3 600	**4T-30312D**
	130	48.5	46	37	3	2.5	244	315	24 900	32 000	3 000	4 000	**32312U**
65	90	17	17	14	1	1	48.5	85.0	4 900	8 700	3 700	4 900	**32913XU**
	100	23	23	17.5	1.5	1.5	83.0	128	8 450	13 000	3 400	4 600	**4T-32013X**
	100	27	27	21	1.5	1.5	97.5	156	9 950	16 000	3 400	4 600	**4T-33013**
	110	34	34	26.5	1.5	1.5	144	211	14 700	21 500	3 300	4 400	**4T-33113**
	120	24.75	23	20	2	1.5	123	148	12 500	15 000	3 100	4 200	**4T-30213**
	120	32.75	31	27	2	1.5	159	206	16 200	21 000	3 100	4 200	**32213U**
	120	41	41	32	2	1.5	195	265	19 900	27 100	3 100	4 200	**33213U**
	140	36	33	28	3	2.5	203	238	20 700	24 300	2 800	3 700	**30313U**
	140	36	33	23	3	2.5	173	204	17 700	20 900	2 500	3 300	**4T-30313D**
	140	51	48	39	3	2.5	273	350	27 800	36 000	2 800	3 700	**32313U**
70	100	20	20	16	1	1	68.5	110	7 000	11 200	3 400	4 600	**32914XU**
	110	25	25	19	1.5	1.5	105	160	10 700	16 400	3 200	4 200	**4T-32014X**
	110	31	31	25.5	1.5	1.5	127	204	12 900	20 800	3 200	4 200	**4T-33014**
	125	26.25	24	21	2	1.5	131	162	13 400	16 500	2 900	3 900	**4T-30214**
	125	33.25	31	27	2	1.5	166	220	16 900	22 400	2 900	3 900	**32214U**
	125	41	41	32	2	1.5	201	282	20 500	28 700	2 900	3 900	**33214U**
	140	39	35.5	27	3	3	173	231	17 600	23 500	2 400	3 200	**4T-T7FC070**
	150	38	35	30	3	2.5	230	272	23 400	27 800	2 600	3 500	**30314U**
	150	38	35	25	3	2.5	193	229	19 600	23 300	2 300	3 000	**4T-30314D**
	150	54	51	42	3	2.5	310	405	31 500	41 000	2 600	3 500	**32314U**
75	105	20	20	16	1	1	69.5	114	7 100	11 600	3 200	4 300	**32915XU**
	115	25	25	19	1.5	1.5	106	167	10 800	17 000	3 000	4 000	**32015XU**
	115	31	31	25.5	1.5	1.5	111	186	11 300	19 000	3 000	4 000	**33015U**
	130	27.25	25	22	2	1.5	139	175	14 200	17 900	2 700	3 600	**4T-30215**
	130	33.25	31	27	2	1.5	168	224	17 100	22 800	2 700	3 600	**32215U**
	130	41	41	31	2	1.5	208	298	21 200	30 500	2 700	3 600	**33215U**
	160	40	37	31	3	2.5	255	305	26 000	31 000	2 400	3 200	**30315U**
	160	40	37	26	3	2.5	215	256	21 900	26 100	2 100	2 800	**30315DU**

1) Minimal allowable dimension for chamfer dimension r or r_1.

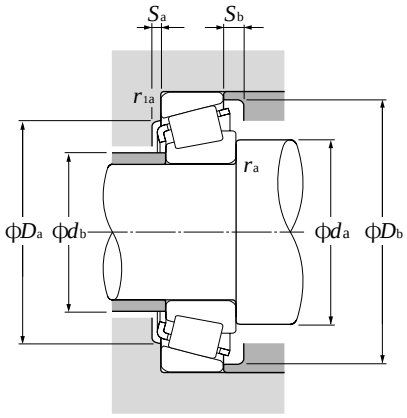

Equivalent radial load

dynamic

$P_r = XF_r + YF_a$

$\frac{F_a}{F_r} \leqq e$		$\frac{F_a}{F_r} > e$	
X	Y	X	Y
1	0	0.4	Y_2

static

$P_{or} = 0.5F_r + Y_oF_a$

When $P_{or} < F_r$ use $P_{or} = F_r$

For values of e, Y_2 and Y_o see the table below.

Dimensions series to ISO	Abutment and fillet dimensions mm									Load center mm	Constant	Axial load factors		Mass kg
	d_a min	d_b max	D_a max	D_a min	D_b min	S_a min	S_b min	r_{as} max	r_{1as} max	a	e	Y_2	Y_o	(approx.)
3EB	70	70	101.5	96	103	4	4.5	2	1.5	22	0.40	1.48	0.81	0.949
3EC	70	69	101.5	95	104	4	5.5	2	1.5	25	0.40	1.48	0.81	1.18
3EE	70	69	101.5	93	105	6	9	2	1.5	27.5	0.40	1.48	0.82	1.55
2EE	72	70	103	98	109	6	7	2	2	28.5	0.33	1.80	0.99	1.86
7FC	74	72	111	94	119	4	11	2.5	2.5	42	0.82	0.73	0.40	2
2FB	74	77	118	112	120	4	7.5	2.5	2	26.5	0.35	1.74	0.96	2.06
7FB	74	73	118	103	124	4	11.5	2.5	2	40.5	0.83	0.73	0.40	1.97
2FD	74	74	118	107	120	4	11.5	2.5	2	32	0.35	1.74	0.96	3.02
2BC	70.5	70	84.5	80	86.5	3	3	1	1	16.5	0.35	1.70	0.93	0.315
4CC	73.5	72	91.5	90	97	4	5.5	1.5	1.5	22.5	0.46	1.31	0.72	0.63
2CE	73.5	72	91.5	89	96	5	6	1.5	1.5	21.5	0.35	1.72	0.95	0.732
3DE	73.5	73	101.5	96	106	6	7.5	1.5	1.5	26	0.39	1.55	0.85	1.28
3EB	75	77	111.5	106	113	4	4.5	2	1.5	23.5	0.40	1.48	0.81	1.18
3EC	75	75	111.5	104	115	4	5.5	2	1.5	27	0.40	1.48	0.81	1.58
3EE	75	74	111.5	102	115	7	9	2	1.5	29.5	0.39	1.54	0.85	1.98
2GB	79	83	128	122	130	4	8	2.5	2	28.5	0.35	1.74	0.96	2.55
7GB	79	79	128	111	133	4	13	2.5	2	44	0.83	0.73	0.40	2.42
2GD	79	80	128	117	130	4	12	2.5	2	34.5	0.35	1.74	0.96	3.66
2BC	75.5	75	94.5	90	96	4	4	1	1	18	0.32	1.90	1.05	0.487
4CC	78.5	78	101.5	98	105	5	6	1.5	1.5	24	0.43	1.38	0.76	0.848
2CE	78.5	79	101.5	99	105	5	5.5	1.5	1.5	22.5	0.28	2.11	1.16	1.07
3EB	80	81	116.5	110	118	4	5	2	1.5	25.5	0.42	1.43	0.79	1.26
3EC	80	80	116.5	108	119	4	6	2	1.5	28.5	0.42	1.43	0.79	1.68
3EE	80	79	116.5	107	120	7	9	2	1.5	31	0.41	1.47	0.81	2.1
7FC	84	82	126	106	135	5	12	2.5	2.5	47.5	0.87	0.69	0.38	2.61
2GB	84	89	138	130	140	4	8	2.5	2	30	0.35	1.74	0.96	3.06
7GB	84	84	138	118	142	4	13	2.5	2	47	0.83	0.73	0.40	2.92
2GD	84	86	138	125	140	4	12	2.5	2	36.5	0.35	1.74	0.96	4.46
2BC	80.5	80	99.5	94	101.5	4	4	1	1	19	0.33	1.80	0.99	0.511
4CC	83.5	83	106.5	103	110	5	6	1.5	1.5	25.5	0.46	1.31	0.72	0.909
2CE	83.5	85	106.5	101	110.5	6	5.5	1.5	1.5	23	0.30	2.01	1.11	1.11
4DB	85	85	121.5	115	124	4	5	2	1.5	27	0.44	1.38	0.76	1.41
4DC	85	85	121.5	114	125	4	6	2	1.5	30	0.44	1.38	0.76	1.74
3EE	85	83	121.5	111	125	7	10	2	1.5	32	0.43	1.40	0.77	2.2
2GB	89	95	148	139	149	4	9	2.5	2	32	0.35	1.74	0.96	3.57
7GB	89	91	148	127	151	6	14	2.5	2	50	0.83	0.73	0.40	3.47

Metric series

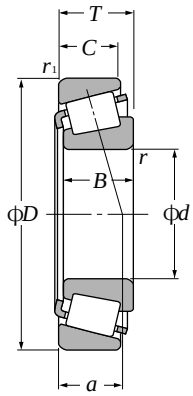

d 75～95mm

Boundary dimensions							Basic load ratings				Limiting speeds		Bearing numbers
							dynamic	static	dynamic	static			
		mm					kN		kgf		min^{-1}		
d	D	T	B	C	$r_{s\,min}$ 1)	$r_{ls\,min}$ 1)	C_r	C_{or}	C_r	C_{or}	grease	oil	
75	160	58	55	45	3	2.5	355	470	36 000	47 500	2 400	3 200	**32315U**
80	110	20	20	16	1	1	72.0	121	7 350	12 400	3 000	4 000	**32916XU**
	125	29	29	22	1.5	1.5	139	216	14 200	22 000	2 800	3 700	**32016XU**
	125	36	36	29.5	1.5	1.5	173	284	17 600	29 000	2 800	3 700	**33016U**
	140	28.25	26	22	2.5	2	160	200	16 300	20 400	2 500	3 400	**30216U**
	140	35.25	33	28	2.5	2	199	265	20 300	27 000	2 500	3 400	**32216U**
	140	46	46	35	2.5	2	250	365	25 500	37 500	2 500	3 400	**33216U**
	170	42.5	39	33	3	2.5	291	350	29 700	36 000	2 300	3 000	**30316U**
	170	42.5	39	27	3	2.5	236	283	24 100	28 900	2 000	2 700	**30316DU**
	170	61.5	58	48	3	2.5	395	525	40 500	53 500	2 300	3 000	**32316U**
85	120	23	23	18	1.5	1.5	94.0	157	9 600	16 100	2 800	3 800	**32917XU**
	130	29	29	22	1.5	1.5	142	224	14 400	22 900	2 600	3 500	**32017XU**
	130	36	36	29.5	1.5	1.5	176	296	18 000	30 000	2 600	3 500	**33017U**
	150	30.5	28	24	2.5	2	183	232	18 600	23 600	2 400	3 200	**30217U**
	150	38.5	36	30	2.5	2	224	300	22 900	30 500	2 400	3 200	**32217U**
	150	49	49	37	2.5	2	284	420	29 000	43 000	2 400	3 200	**33217U**
	180	44.5	41	34	4	3	305	365	31 000	37 000	2 100	2 900	**30317U**
	180	44.5	41	28	4	3	247	293	25 200	29 900	1 900	2 500	**30317DU**
	180	63.5	60	49	4	3	405	525	41 000	53 500	2 100	2 900	**32317U**
90	125	23	23	18	1.5	1.5	97.5	168	9 950	17 100	2 700	3 600	**32918XU**
	140	32	32	24	2	1.5	168	270	17 200	27 600	2 500	3 300	**32018XU**
	140	39	39	32.5	2	1.5	215	360	21 900	36 500	2 500	3 300	**33018U**
	160	32.5	30	26	2.5	2	208	267	21 200	27 200	2 200	3 000	**30218U**
	160	42.5	40	34	2.5	2	262	360	26 700	36 500	2 200	3 000	**32218U**
	190	46.5	43	36	4	3	335	405	34 500	41 500	2 000	2 700	**30318U**
	190	46.5	43	30	4	3	270	320	27 600	33 000	1 800	2 400	**30318DU**
	190	67.5	64	53	4	3	450	595	46 000	60 500	2 000	2 700	**32318U**
95	130	23	23	18	1.5	1.5	101	178	10 300	18 200	2 500	3 400	**32919XU**
	145	32	32	24	2	1.5	171	280	17 500	28 600	2 300	3 100	**32019XU**
	145	39	39	32.5	2	1.5	219	375	22 400	38 000	2 300	3 100	**33019U**
	170	34.5	32	27	3	2.5	226	290	23 000	29 600	2 100	2 800	**30219U**
	170	45.5	43	37	3	2.5	299	415	30 500	42 500	2 100	2 800	**32219U**
	200	49.5	45	38	4	3	365	445	37 500	45 500	1 900	2 500	**30319U**
	200	49.5	45	38	3	3	315	365	32 500	37 500	1 900	2 500	**30319** 2)
	200	49.5	45	32	4	3	296	355	30 000	36 500	1 700	2 200	**30319DU**

1) Minimal allowable dimension for chamfer dimension r or r_1.
2) This bearing does not incorporate the subunit dimensions.

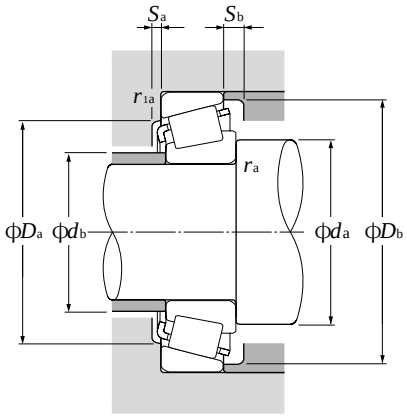

Equivalent radial load

dynamic

$P_r = XF_r + YF_a$

$\frac{F_a}{F_r} \leqq e$		$\frac{F_a}{F_r} > e$	
X	Y	X	Y
1	0	0.4	Y_2

static

$P_{or} = 0.5F_r + Y_oF_a$

When $P_{or} < F_r$ use $P_{or} = F_r$

For values of e, Y_2 and Y_o see the table below.

Dimensions series to ISO	Abutment and fillet dimensions mm									Load center mm	Constant	Axial load factors		Mass kg
	d_a min	d_b max	D_a max	D_a min	D_b min	S_a min	S_b min	r_{as} max	r_{1as} max	a	e	Y_2	Y_o	(approx.)
2GD	89	91	148	133	149	4	13	2.5	2	39	0.35	1.74	0.96	5.35
2BC	85.5	85	104.5	99	106.5	4	4	1	1	20	0.35	1.71	0.94	0.54
3CC	88.5	89	116.5	112	120	6	7	1.5	1.5	27	0.42	1.42	0.78	1.28
2CE	88.5	89	116.5	112	119	6	6.5	1.5	1.5	25	0.28	2.16	1.19	1.6
3EB	92	91	130	124	132	4	6	2	2	27.5	0.42	1.43	0.79	1.72
3EC	92	90	130	122	134	4	7	2	2	31	0.42	1.43	0.79	2.18
3EE	92	89	130	119	135	7	11	2	2	35	0.43	1.41	0.78	2.92
2GB	94	102	158	148	159	4	9.5	2.5	2	34	0.35	1.74	0.96	4.41
7GB	94	97	158	134	159	6	15.5	2.5	2	53.5	0.83	0.73	0.40	4.11
2GD	94	98	158	142	159	4	13.5	2.5	2	41.5	0.35	1.74	0.96	6.41
2BC	93.5	92	111.5	111	115	4	5	1.5	1.5	21	0.33	1.83	1.01	0.773
4CC	93.5	94	121.5	117	125	6	7	1.5	1.5	28.5	0.44	1.36	0.75	1.35
2CE	93.5	94	121.5	118	125	6	6.5	1.5	1.5	26	0.29	2.06	1.13	1.7
3EB	97	97	140	132	141	5	6.5	2	2	30	0.42	1.43	0.79	2.14
3EC	97	96	140	130	142	5	8.5	2	2	33.5	0.42	1.43	0.79	2.75
3EE	97	95	140	128	144	7	12	2	2	37.5	0.42	1.43	0.79	3.58
2GB	103	107	166	156	167	5	10.5	3	2.5	35.5	0.35	1.74	0.96	5.2
7GB	103	103	166	143	169	6	16.5	3	2.5	56	0.83	0.73	0.40	4.85
2GD	103	102	166	150	167	5	14.5	3	2.5	43	0.35	1.74	0.96	7.15
2BC	98.5	96	116.5	112.5	120.5	4	5	1.5	1.5	22	0.34	1.75	0.96	0.817
3CC	100	100	131.5	125	134	6	8	2	1.5	30	0.42	1.42	0.78	1.79
2CE	100	100	131.5	127	135	7	6.5	2	1.5	28	0.27	2.23	1.23	2.18
3FB	102	103	150	140	150	5	6.5	2	2	32	0.42	1.43	0.79	2.66
3FC	102	102	150	138	152	5	8.5	2	2	36	0.42	1.43	0.79	3.49
2GB	108	113	176	165	177	5	10.5	3	2.5	37.5	0.35	1.74	0.96	6.03
7GB	108	109	176	151	179	6	16.5	3	2.5	59	0.83	0.73	0.40	5.66
2GD	108	108	176	157	177	5	14.5	3	2.5	45.5	0.35	1.74	0.96	8.57
2BC	103.5	101	121.5	117	125.5	4	5	1.5	1.5	23.5	0.36	1.68	0.92	0.851
4CC	105	105	136.5	130	140	6	8	2	1.5	31.5	0.44	1.36	0.75	1.83
2CE	105	104	136.5	131	139	7	6.5	2	1.5	28.5	0.28	2.16	1.19	2.27
3FB	109	110	158	149	159	5	7.5	2.5	2	34	0.42	1.43	0.79	3.07
3FC	109	108	158	145	161	5	8.5	2.5	2	39	0.42	1.43	0.79	4.3
2GB	113	118	186	172	186	5	11.5	3	2.5	40	0.35	1.74	0.96	6.98
	113	118	186	172	186	5	11.5	3	2.5	40	0.35	1.73	0.95	6.58
7GB	113	114	186	154	187	6	17.5	3	2.5	62.5	0.83	0.73	0.40	6.47

Note: When selecting bearings with bearing numbers marked with " ∗ ", please consult NTN Engineering.

Metric series

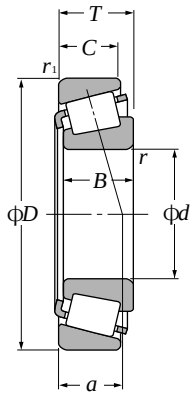

d 95～120mm

Boundary dimensions							Basic load ratings				Limiting speeds		Bearing numbers
							dynamic	static	dynamic	static			
		mm					kN		kgf		min^{-1}		
d	D	T	B	C	$r_{s\,min}$ 1)	$r_{ls\,min}$ 1)	C_r	C_{or}	C_r	C_{or}	grease	oil	
95	200	71.5	67	55	4	3	505	670	51 500	68 500	1 900	2 500	**32319U**
100	140	25	25	20	1.5	1.5	121	206	12 300	21 000	2 400	3 200	∗ **32920XU**
	140	25	24	20	1.5	1.5	97.5	162	9 950	16 500	2 400	3 200	**32920** 2)
	145	24	22.5	17.5	3	3	107	153	10 900	15 600	1 800	2 400	**4T-T4CB100**
	150	32	32	24	2	1.5	170	281	17 300	28 600	2 200	3 000	**32020XU**
	150	39	39	32.5	2	1.5	224	390	22 800	39 500	2 200	3 000	**33020U**
	180	37	34	29	3	2.5	258	335	26 300	34 500	2 000	2 700	**30220U**
	180	49	46	39	3	2.5	330	465	33 500	47 500	2 000	2 700	**32220U**
	215	51.5	47	39	4	3	410	500	41 500	51 000	1 800	2 400	**30320U**
	215	51.5	47	39	3	3	345	400	35 000	40 500	1 800	2 400	**30320** 2)
	215	56.5	51	35	4	3	355	435	36 000	44 000	1 800	2 400	**31320XU**
	215	77.5	73	60	4	3	570	770	58 500	78 500	1 800	2 400	**32320U**
105	145	25	25	20	1.5	1.5	126	219	12 800	22 400	2 300	3 000	**32921XA** 2)
	160	35	35	26	2.5	2	201	335	20 500	34 000	2 100	2 800	**32021XU**
	160	43	43	34	2.5	2	245	420	25 000	43 000	2 100	2 800	**33021U**
	190	39	36	30	3	2.5	287	380	29 300	38 500	1 900	2 500	**30221U**
	190	53	50	43	3	2.5	380	540	38 500	55 500	1 900	2 500	**32221U**
	225	53.5	49	41	4	3	435	530	44 500	54 500	1 700	2 300	∗ **30321U**
	225	53.5	49	41	3	3	365	420	37 000	43 000	1 700	2 300	**30321** 2)
	225	58	53	36	4	3	380	470	39 000	47 500	1 700	2 300	∗ **31321XU**
	225	81.5	77	63	4	3	610	825	62 500	84 500	1 700	2 300	**32321U**
110	150	25	25	20	1.5	1.5	127	226	13 000	23 100	2 200	2 900	**32922XA** 2)
	170	38	38	29	2.5	2	236	390	24 000	39 500	2 000	2 700	**32022XU**
	170	47	47	37	2.5	2	288	500	29 400	51 000	2 000	2 700	**33022U**
	200	41	38	32	3	2.5	325	435	33 000	44 000	1 800	2 400	**30222U**
	200	56	53	46	3	2.5	420	605	43 000	62 000	1 800	2 400	**32222U**
	240	54.5	50	42	4	3	480	590	49 000	60 000	1 600	2 200	∗ **30322U**
	240	54.5	50	42	3	3	400	465	40 500	47 000	1 600	2 200	**30322** 2)
	240	63	57	38	4	3	430	535	44 000	54 500	1 600	2 200	**31322XU**
	240	84.5	80	65	4	3	705	970	72 000	98 500	1 600	2 200	∗ **32322U**
	240	84.5	80	65	3	3	620	830	63 500	84 500	1 600	2 200	**32322** 2)
120	165	29	29	23	1.5	1.5	162	294	16 500	30 000	2 000	2 600	∗ **32924XU**
	165	29	27	23	1.5	1.5	118	205	12 000	20 900	2 000	2 600	**32924** 2)
	180	38	38	29	2.5	2	245	420	25 000	43 000	1 800	2 500	**32024XU**
	215	43.5	40	34	3	2.5	345	470	35 500	48 000	1 700	2 200	**30224U**

1) Minimal allowable dimension for chamfer dimension r or r_1.
2) This bearing does not incorporate the subunit dimensions.

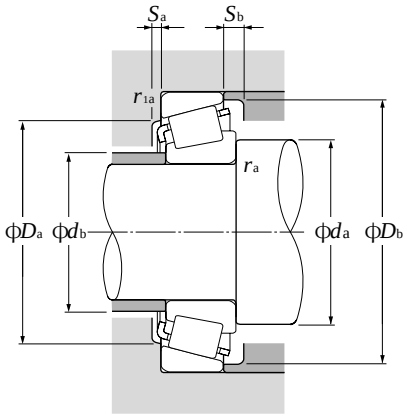

Equivalent radial load

dynamic

$P_r = XF_r + YF_a$

$\frac{F_a}{F_r} \leqq e$		$\frac{F_a}{F_r} > e$	
X	Y	X	Y
1	0	0.4	Y_2

static

$P_{or} = 0.5F_r + Y_oF_a$

When $P_{or} < F_r$ use $P_{or} = F_r$

For values of e, Y_2 and Y_o see the table below.

Dimensions series to ISO	Abutment and fillet dimensions mm									Load center mm	Constant	Axial load factors		Mass kg
	d_a min	d_b max	D_a max	D_a min	D_b min	S_a min	S_b min	r_{as} max	r_{1as} max	a	e	Y_2	Y_o	(approx.)
2GD	113	113	186	166	186	5	16.5	3	2.5	49	0.35	1.74	0.96	10.1
2CC	108.5	107.5	131.5	127.5	135.5	4	5	1.5	1.5	24.5	0.33	1.82	1.00	1.14
	108.5	107.5	131.5	127.5	135.5	4	5	1.5	1.5	25	0.35	1.73	0.95	1.08
4CB	114	109	131	130	140	4	6.5	2.5	2.5	30	0.47	1.27	0.70	1.15
4CC	110	109	141.5	134	144	6	8	2	1.5	32.5	0.46	1.31	0.72	1.91
2CE	110	108	141.5	135	143	7	6.5	2	1.5	29.5	0.29	2.09	1.15	2.37
3FB	114	116	168	157	168	5	8	2.5	2	36	0.42	1.43	0.79	3.78
3FC	114	114	168	154	171	5	10	2.5	2	41.5	0.42	1.43	0.79	5.12
2GB	118	127	201	184	200	5	12.5	3	2.5	41.5	0.35	1.74	0.96	8.56
	118	127	201	184	200	5	12.5	3	2.5	42	0.35	1.73	0.95	7.72
7GB	118	121	201	168	202	7	21.5	3	2.5	69	0.83	0.73	0.40	8.67
2GD	118	121	201	177	200	5	17.5	3	2.5	53	0.35	1.74	0.96	12.7
	113.5	113.5	136.5	131.5	140.5	5	5	1.5	1.5	25	0.34	1.76	0.97	1.20
4DC	117	116	150	143	154	6	9	2	2	34.5	0.44	1.35	0.74	2.42
2DE	117	116	150	145	153	7	9	2	2	31	0.28	2.12	1.17	3.00
3FB	119	122	178	165	178	6	9	2.5	2	38	0.42	1.43	0.79	4.39
3FC	119	119	178	161	180	6	10	2.5	2	44	0.42	1.43	0.79	6.25
2GB	123	132	211	193	209	6	12.5	3	2.5	43.5	0.35	1.74	0.96	9.79
	123	132	211	193	209	6	12.5	3	2.5	43.5	0.35	1.73	0.95	8.93
7GB	123	126	211	176	211	7	22	3	2.5	71.5	0.83	0.73	0.40	9.68
2GD	123	128	211	185	209	6	18.5	3	2.5	55	0.35	1.74	0.96	14.5
	118.5	117.5	141.5	137	145.5	5	5	1.5	1.5	26.5	0.36	1.69	0.93	1.23
4DC	122	122	160	152	163	7	9	2	2	36.5	0.43	1.39	0.77	3.07
2DE	122	121	160	152	161	7	10	2	2	33.5	0.29	2.09	1.15	3.80
3FB	124	129	188	174	188	6	9	2.5	2	40	0.42	1.43	0.79	5.18
3FC	124	126	188	170	190	6	10	2.5	2	47	0.42	1.43	0.79	7.43
2GB	128	141	226	206	222	6	12.5	3	2.5	45.5	0.35	1.74	0.96	11.4
	128	141	226	206	222	6	12.5	3	2.5	44	0.35	1.73	0.95	10.5
7GB	128	135	226	188	224	7	25	3	2.5	76	0.83	0.73	0.40	11.9
2GD	128	135	226	198	222	6	19.5	3	2.5	57.5	0.35	1.74	0.96	18.0
	128	135	226	198	222	6.5	19.5	3	2.5	56	0.35	1.73	0.95	16.9
2CC	128.5	128.5	156.5	150	160	6	6	1.5	1.5	29.5	0.35	1.72	0.95	1.77
	128.5	130.5	156.5	147.5	159.5	6	6	1.5	1.5	31	0.37	1.60	0.88	1.63
4DC	132	131	170	161	173	7	9	2	2	39	0.46	1.31	0.72	3.25
4FB	134	140	203	187	203	6	9.5	2.5	2	44	0.44	1.38	0.76	6.23

Note: When selecting bearings with bearing numbers marked with " ∗ ", please consult NTN Engineering.

Metric series

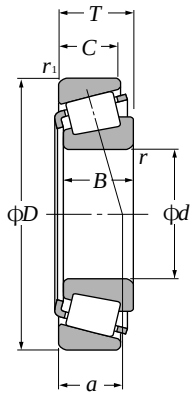

d 120～170mm

Boundary dimensions							Basic load ratings				Limiting speeds		Bearing numbers
							dynamic	static	dynamic	static			
	mm						kN		kgf		min-1		
d	D	T	B	C	$r_{s\,min}$ 1)	$r_{1s\,min}$ 1)	C_r	C_{or}	C_r	C_{or}	grease	oil	
120	215	61.5	58	50	3	2.5	460	680	47 000	69 500	1 700	2 200	**32224U**
	260	59.5	55	46	4	3	560	695	57 000	71 000	1 500	2 000	**30324U**
	260	59.5	55	46	3	3	465	550	47 500	56 000	1 500	2 000	**30324** 2)
	260	68	62	42	4	3	515	655	52 500	67 000	1 500	2 000	**31324XU**
	260	90.5	86	69	4	3	815	1 130	83 000	116 000	1 500	2 000	**32324U**
130	180	32	32	25	2	1.5	194	350	19 800	36 000	1 800	2 400	∗ **32926XU**
	180	32	30	26	2	2	142	252	14 500	25 700	1 800	2 400	**32926** 2)
	200	45	45	34	2.5	2	320	545	32 500	55 500	1 700	2 200	**32026XU**
	230	43.75	40	34	4	3	375	505	38 000	51 500	1 500	2 000	**30226U**
	230	67.75	64	54	4	3	530	815	54 000	83 000	1 500	2 000	**32226U**
	280	63.75	58	49	5	4	650	830	66 000	84 500	1 400	1 800	**30326U**
	280	72	66	44	5	4	600	780	61 500	79 500	1 400	1 800	**31326XU**
140	190	32	32	25	2	1.5	200	375	20 400	38 000	1 700	2 200	**32928XU**
	210	45	45	34	2.5	2	330	580	33 500	59 500	1 600	2 100	**32028XU**
	250	45.75	42	36	4	3	420	570	43 000	58 500	1 400	1 900	∗ **30228U**
	250	45.75	42	36	3	3	375	485	38 000	49 500	1 400	1 900	**30228** 2)
	250	71.75	68	58	4	3	610	920	62 500	94 000	1 400	1 900	**32228U**
	300	67.75	62	53	5	4	735	950	75 000	97 000	1 300	1 700	∗ **30328U**
	300	67.75	62	53	4	4	640	780	65 000	80 000	1 300	1 700	**30328** 2)
	300	77	70	47	5	4	685	905	70 000	92 500	1 300	1 700	**31328XU**
150	210	38	38	30	2.5	2	268	490	27 300	50 000	1 600	2 100	**32930XU**
	225	48	48	36	3	2.5	370	655	37 500	67 000	1 400	1 900	**32030XU**
	270	49	45	38	4	3	450	605	46 000	61 500	1 300	1 700	**30230U**
	270	77	73	60	4	3	700	1070	71 500	109 000	1 300	1 700	**32230U**
	320	72	65	55	5	4	825	1070	84 000	109 000	1 200	1 600	∗ **30330U**
	320	72	65	55	4	4	680	875	69 500	89 000	1 200	1 600	**30330** 2)
	320	82	75	50	5	4	775	1 030	79 000	105 000	1 200	1 600	**31330XU**
160	220	38	38	30	2.5	2	276	520	28 200	53 000	1 500	1 900	**32932XU**
	240	51	51	38	3	2.5	435	790	44 500	80 500	1 400	1 800	**32032XU**
	290	52	48	40	4	3	525	720	53 500	73 500	1 200	1 600	**30232U**
	290	84	80	67	4	3	890	1 420	90 500	145 000	1 200	1 600	**32232U**
	340	75	68	58	5	4	915	1 200	93 500	122 000	1 100	1 500	∗ **30332U**
	340	75	68	58	4	4	755	975	77 000	99 500	1 100	1 500	**30332** 2)
170	230	38	38	30	2.5	2	286	560	29 200	57 000	1 400	1 800	**32934XU**

1) Minimal allowable dimension for chamfer dimension r or r_1.
2) This bearing does not incorporate the subunit dimensions.

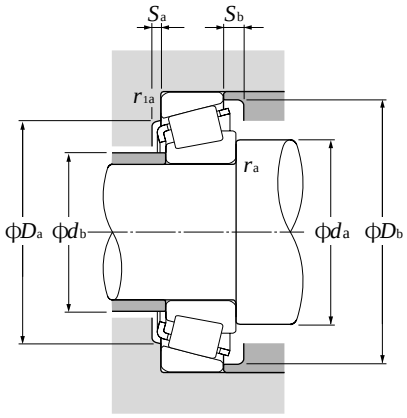

Equivalent radial load

dynamic

$P_r = XF_r + YF_a$

$\frac{F_a}{F_r} \leqq e$		$\frac{F_a}{F_r} > e$	
X	Y	X	Y
1	0	0.4	Y_2

static

$P_{or} = 0.5F_r + Y_oF_a$

When $P_{or} < F_r$ use $P_{or} = F_r$

For values of e, Y_2 and Y_o see the table below.

Dimensions series to ISO	Abutment and fillet dimensions mm									Load center mm	Constant	Axial load factors		Mass kg
	d_a min	d_b max	D_a max	D_a min	D_b min	S_a min	S_b min	r_{as} max	r_{1as} max	a	e	Y_2	Y_o	(approx.)
4FD	134	136	203	181	204	6	11.5	2.5	2	51.5	0.44	1.38	0.76	9.08
2GB	138	152	246	221	239	6	13.5	3	2.5	49	0.35	1.74	0.96	14.2
	138	152	246	221	239	6	13.5	3	2.5	48.5	0.35	1.73	0.95	13.2
7GB	138	145	246	203	244	9	26	3	2.5	82.5	0.83	0.73	0.40	15.4
2GD	138	145	246	213	239	6	21.5	3	2.5	61.5	0.35	1.74	0.96	22.4
2CC	140	139	171.5	163.5	174	6	7	2	1.5	31.5	0.34	1.77	0.97	2.36
	140	139	170	163.5	174	6	6	2	2	34	0.37	1.60	0.88	2.22
4EC	142	144	190	178	192	8	11	2	2	43.5	0.43	1.38	0.76	4.96
4FB	148	152	216	203	218	7	9.5	3	2.5	45.5	0.44	1.38	0.76	7.25
4FD	148	146	216	193	219	7	13.5	3	2.5	57	0.44	1.38	0.76	11.2
2GB	152	164	262	239	255	8	14.5	4	3	53.5	0.35	1.74	0.96	17.4
7GB	152	152	262	218	261	9	28	4	3	87.5	0.83	0.73	0.40	19
2CC	150	150	181.5	177	184	6	6	2	1.5	34	0.36	1.67	0.92	2.51
4DC	152	153	200	187	202	8	11	2	2	46	0.46	1.31	0.72	5.28
4FB	158	163	236	219	237	7	9.5	3	2.5	48.5	0.44	1.38	0.76	9.26
	158	163	236	219	237	7	9.5	2.5	2.5	47.5	0.43	1.39	0.77	8.37
4FD	158	158	236	210	238	9	13.5	3	2.5	61	0.44	1.38	0.76	14.1
2GB	162	179	282	251	273	9	14.5	4	3	56.5	0.35	1.74	0.96	21.2
	162	179	282	252	273	9	14.5	4	3	57	0.35	1.73	0.95	20.4
7GB	162	165	282	234	280	9	30	4	3	94	0.83	0.73	0.40	23
2DC	162	162	200	192	202	7	8	2	2	36.5	0.33	1.83	1.01	3.92
4EC	164	164	213	200	216	8	12	2.5	2	49.5	0.46	1.31	0.72	6.37
4GB	168	175	256	234	255	7	11	3	2.5	51.5	0.44	1.38	0.76	11.2
4GD	168	170	256	226	254	8	17	3	2.5	64.5	0.44	1.38	0.76	18.2
2GB	172	193	302	269	292	8	17	4	3	61	0.35	1.74	0.96	25.5
	172	193	302	269	292	8	17	4	3	62.5	0.37	1.60	0.88	24.7
7GB	172	176	302	250	302	9	32	4	3	100.5	0.83	0.73	0.40	27.7
2DC	172	170.5	210	199	213.5	7	8	2	2	38.5	0.35	1.73	0.95	4.15
4EC	174	175	228	213	231	8	13	2.5	2	52.5	0.46	1.31	0.72	7.8
4GB	178	189	276	252	272	8	12	3	2.5	55.5	0.44	1.38	0.76	12.9
4GD	178	182	276	242	275	10	17	3	2.5	70	0.44	1.38	0.76	23.5
2GB	182	205	322	286	310	10	17	4	3	64	0.35	1.74	0.96	29.9
	182	205	322	286	311	10	17	4	3	65.5	0.37	1.60	0.88	29.2
3DC	182	183	220	213	222	7	8	2	2	42.5	0.38	1.57	0.86	4.4

Note: When selecting bearings with bearing numbers marked with " ∗ ", please consult NTN Engineering.

Metric series

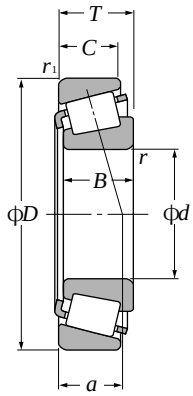

d 170～300mm

Boundary dimensions							Basic load ratings				Limiting speeds		Bearing numbers
							dynamic	static	dynamic	static			
			mm				kN		kgf		min-1		
d	D	T	B	C	$r_{s\,min}$ 1)	$r_{ls\,min}$ 1)	C_r	C_{or}	C_r	C_{or}	grease	oil	
170	260	57	57	43	3	2.5	500	895	51 000	91 000	1 300	1 700	32034XU
	310	57	52	43	5	4	610	845	62 000	86 500	1 100	1 500	30234U
	310	91	86	71	5	4	1 000	1 600	102 000	163 000	1 100	1 500	32234U
	360	80	72	62	5	4	1 010	1 320	103 000	135 000	1 000	1 400	∗ 30334U
	360	80	72	62	4	4	845	1 100	86 000	113 000	1 000	1 400	30334 2)
180	250	45	45	34	2.5	2	350	700	36 000	71 500	1 300	1 700	32936XU
	280	64	64	48	3	2.5	645	1 170	66 000	119 000	1 200	1 600	32036XUE1
	320	57	52	43	5	4	630	890	64 000	91 000	1 100	1 400	30236U
	320	91	86	71	5	4	1 030	1 690	105 000	172 000	1 100	1 400	32236U
190	260	45	45	34	2.5	2	355	710	36 000	72 000	1 200	1 600	∗ 32938XU
	260	45	42	36	2.5	2.5	280	525	28 600	53 500	1 200	1 600	32938 2)
	290	64	64	48	3	2.5	655	1 210	67 000	124 000	1 100	1 500	32038XUE1
	340	60	55	46	5	4	715	1 000	73 000	102 000	1 000	1 300	30238U
	340	97	92	75	5	4	1 150	1 850	117 000	189 000	1 000	1 300	∗ 32238U
	340	97	92	75	4	4	1 000	1 670	102 000	171 000	1 000	1 300	32238 2)
200	280	51	51	39	3	2.5	485	895	49 000	91 000	1 100	1 500	32940XUE1
	310	70	70	53	3	2.5	800	1 470	81 500	149 000	1 100	1 400	32040XUE1
	360	64	58	48	5	4	785	1 110	80 000	113 000	950	1 300	30240U
	360	104	98	82	5	4	1 320	2 130	134 000	217 000	950	1 300	∗ 32240U
	360	104	98	82	4	4	1 150	1 970	118 000	201 000	950	1 300	32240 2)
220	300	51	51	39	3	2.5	480	950	49 000	97 000	1 000	1 400	∗ 32944XUE1
	300	51	48	41	2.5	2.5	345	670	35 500	68 500	1 000	1 400	32944E1 2)
	340	76	76	57	4	3	920	1 690	94 000	173 000	960	1 300	32044XU
240	320	51	51	39	3	2.5	490	1 000	50 000	102 000	940	1 200	32948XUE1
	360	76	76	57	4	3	930	1 760	95 000	179 000	870	1 200	32048XU
260	360	63.5	63.5	48	3	2.5	705	1 430	72 000	146 000	860	1 100	32952XUE1
	400	87	87	65	5	4	1 200	2 270	123 000	231 000	800	1 100	32052XU
280	380	63.5	63.5	48	3	2.5	725	1 520	74 000	155 000	790	1 100	32956XUE1
	420	87	87	65	5	4	1 220	2 350	125 000	240 000	740	980	32056XU
300	420	76	76	57	4	3	1 010	2 090	103 000	213 000	720	970	32960XUE1
	460	100	100	74	5	4	1 490	2 830	152 000	289 000	680	910	32060XU

1) Minimal allowable dimension for chamfer dimension r or r_1.
2) This bearing does not incorporate the subunit dimensions.

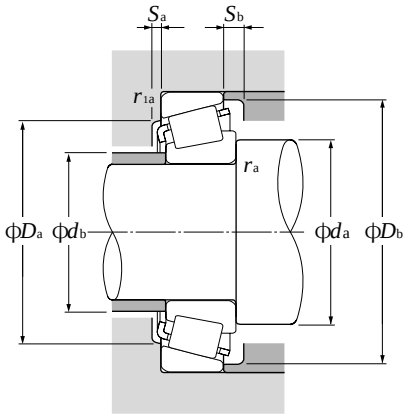

Equivalent radial load

dynamic

$P_r = XF_r + YF_a$

$\frac{F_a}{F_r} \leqq e$		$\frac{F_a}{F_r} > e$	
X	Y	X	Y
1	0	0.4	Y_2

static

$P_{or} = 0.5F_r + Y_oF_a$

When $P_{or} < F_r$ use $P_{or} = F_r$

For values of e, Y_2 and Y_o see the table below.

Dimensions series to ISO	Abutment and fillet dimensions mm									Load center mm	Constant	Axial load factors		Mass kg
	d_a min	d_b max	D_a max	D_a min	D_b min	S_a min	S_b min	r_{as} max	r_{1as} max	a	e	Y_2	Y_o	(approx.)
4EC	184	187	248	230	249	10	14	2.5	2	56	0.44	1.35	0.74	10.5
4GB	192	203	292	266	288	8	14	4	3	60.5	0.44	1.38	0.76	17
4GD	192	201	292	258	293	10	20	4	3	75	0.44	1.38	0.76	28.7
2GB	192	221	342	303	329	10	18	4	3	68	0.35	1.74	0.96	35.3
	192	215.5	342	297	327	10	18	4	3	69.5	0.37	1.60	0.88	34.8
4DC	192	193	240	225	241	8	11	2	2	54	0.48	1.25	0.69	6.54
3FD	194	197.5	268	243	269	10	16	2.5	2	59.5	0.42	1.42	0.78	14.5
4GB	202	211	302	274	297	9	14	4	3	63	0.45	1.33	0.73	17.7
4GD	202	204	302	267	305	10	20	4	3	77.5	0.45	1.33	0.73	30.7
4DC	202	204	250	235	251	8	11	2	2	55	0.48	1.26	0.69	6.77
	202	204	248	235	251	8	9	2	2	48.5	0.37	1.60	0.88	6.43
4FD	204	209	278	257	279	10	16	2.5	2	62.5	0.44	1.36	0.75	15.1
4GB	212	228	322	295	316	9	14	4	3	64	0.44	1.38	0.76	20.8
4GD	212	216	322	282	323	11	22	4	3	82	0.44	1.38	0.76	36.1
	212	216	322	286	323	11	22	4	3	87.5	0.49	1.23	0.68	33.3
3EC	214	214	268	254	271	9	12	2.5	2	53.5	0.39	1.52	0.84	8.88
4FD	214	221	298	273	297	11	17	2.5	2	66.5	0.43	1.39	0.77	19.3
4GB	222	242	342	311	336	10	16	4	3	70	0.44	1.38	0.76	25.4
3GD	222	230	342	298	340	11	22	4	3	85	0.41	1.48	0.81	43.6
	222	230	342	302	344	11	22	4	3	91.5	0.49	1.23	0.68	43.6
3EC	234	234	288	271	290	10	12	2.5	2	59.5	0.43	1.41	0.78	10.2
	234	235	288	274	290	10	10	2.5	2	57	0.39	1.55	0.85	9.63
4FD	238	243	326	300	326	12	19	3	2.5	72.5	0.43	1.39	0.77	25
4EC	254	254	308	290	311	10	12	2.5	2	65.5	0.46	1.31	0.72	10.9
4FD	258	261	346	318	346	12	19	3	2.5	78	0.46	1.31	0.72	26.8
3EC	274	279	348	325	347	11	15	2.5	2	69.5	0.41	1.48	0.81	18.8
4FC	282	287	382	352	383	14	22	4	3	85.5	0.43	1.38	0.76	39.4
4EC	294	298	368	344	368	11	15	2.5	2	75	0.43	1.39	0.76	20
4FC	302	305	402	370	402	14	22	4	3	90.5	0.46	1.31	0.72	41.8
3FD	318	324	406	379	405	13	19	3	2.5	80	0.39	1.52	0.84	31.4
4GD	322	329	442	404	439	15	26	4	3	98	0.43	1.38	0.76	59.6

Note: When selecting bearings with bearing numbers marked with " ∗ ", please consult NTN Engineering.

Metric series

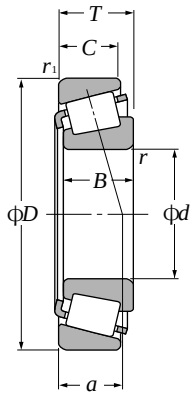

d 320～360mm

Boundary dimensions							Basic load ratings				Limiting speeds		Bearing numbers
							dynamic	static	dynamic	static			
			mm				kN		kgf		min^{-1}		
d	D	T	B	C	$r_{s\,min}$ 1)	$r_{ls\,min}$ 1)	C_r	C_{or}	C_r	C_{or}	grease	oil	
320	440	76	76	57	4	3	1 010	2 150	103 000	219 000	670	900	∗ **32964XUE1**
	440	76	72	63	3	3	865	1 880	88 000	192 000	670	900	**32964E1** 2)
	480	100	100	74	5	4	1 520	2 940	155 000	300 000	630	840	**32064XU**
340	460	76	76	57	4	3	1 040	2 270	106 000	232 000	630	840	∗ **32968XUE1**
	460	76	72	63	3	3	910	1 980	93 000	201 000	630	900	**32968E1** 2)
360	480	76	76	57	4	3	1 050	2 330	107 000	238 000	590	780	**32972XUE1**

1) Minimal allowable dimension for chamfer dimension r or $r1$.
2) This bearing does not incorporate the subunit dimensions.

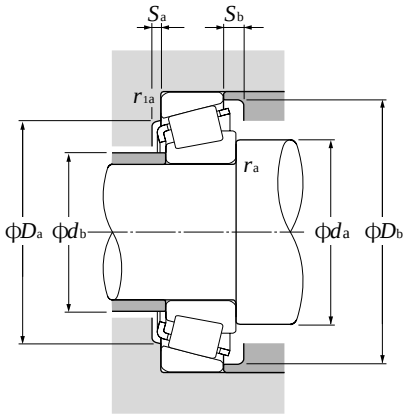

Equivalent radial load

dynamic

$P_r = XF_r + YF_a$

$\frac{F_a}{F_r} \leqq e$		$\frac{F_a}{F_r} > e$	
X	Y	X	Y
1	0	0.4	Y_2

static

$P_{or} = 0.5F_r + Y_oF_a$

When $P_{or} < F_r$ use $P_{or} = F_r$

For values of e, Y_2 and Y_o see the table below.

Dimensions series to ISO	Abutment and fillet dimensions mm									Load center mm	Constant	Axial load factors		Mass kg
	d_a min	d_b max	D_a max	D_a min	D_b min	S_a min	S_b min	r_{as} max	r_{1as} max	a	e	Y_2	Y_o	(approx.)
3FD	338	344	426	398	426	13	19	3	2.5	85	0.42	1.44	0.79	33.1
	338	344	426	398	425	13	13	3	2.5	85	0.39	1.55	0.85	31.7
4GD	342	344.5	462	418.5	463	15	26	4	3	104	0.46	1.31	0.72	60.2
4FD	358	362	446	417	446	13	19	3	2.5	90.5	0.44	1.37	0.75	34.9
	358	362	446	414	445.5	13	13	3	2.5	87	0.39	1.55	0.85	36.0
4FD	378	381	466	436	466	13	19	3	2.5	96.5	0.46	1.31	0.72	36.6

Note: When selecting bearings with bearing numbers marked with " ∗ ", please consult NTN Engineering.

Inch series

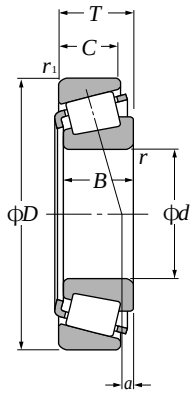

d 12.700～22.225mm

Boundary dimensions mm					Basic load ratings dynamic kN	static kN	dynamic kgf	static kgf	Limiting speeds min-1	
d	D	T	B	C	Cr	Cor	Cr	Cor	grease	oil
12.700	34.988	10.998	10.988	8.730	12.3	11.6	1 260	1 180	12 000	16 000
14.989	34.988	10.998	10.988	8.730	12.3	11.6	1 260	1 180	12 000	16 000
15.875	41.275	14.288	14.681	11.112	20.3	18.7	2 070	1 910	10 000	13 000
	42.862	14.288	14.288	9.525	17.6	17.5	1 800	1 790	8 700	12 000
	42.862	16.670	16.670	13.495	26.7	26.0	2 720	2 650	9 800	13 000
	47.000	14.381	14.381	11.112	24.0	24.2	2 440	2 460	8 600	11 000
	49.225	19.845	21.539	14.288	38.5	39.0	3 900	3 950	8 500	11 000
16.993	47.000	14.381	14.381	11.112	24.0	24.2	2 440	2 460	8 600	11 000
17.462	39.878	13.843	14.605	10.668	23.8	24.2	2 420	2 470	10 000	13 000
19.050	39.992	12.014	11.153	9.525	12.8	12.8	1 310	1 300	10 000	13 000
	45.237	15.494	16.637	12.065	28.3	28.6	2 880	2 920	8 900	12 000
	47.000	14.381	14.381	11.112	24.0	24.2	2 440	2 460	8 600	11 000
	49.225	18.034	19.050	14.288	38.5	39.0	3 900	3 950	8 500	11 000
	49.225	19.845	21.539	14.288	38.5	39.0	3 900	3 950	8 500	11 000
	49.225	21.209	19.050	17.462	38.5	39.0	3 900	3 950	8 500	11 000
	53.975	22.225	21.839	15.875	40.0	39.0	4 100	3 950	8 000	11 000
	56.896	19.368	19.837	15.875	42.5	46.5	4 350	4 750	7 200	9 600
19.987	47.000	14.381	14.381	11.112	24.0	24.2	2 440	2 460	8 600	11 000
20.000	50.005	13.495	14.260	9.525	26.0	27.9	2 650	2 850	7 500	10 000
20.625	49.225	19.845	21.539	14.288	38.5	39.0	3 900	3 950	8 500	11 000
20.638	49.225	19.845	19.845	15.875	37.5	39.0	3 800	3 950	8 200	11 000
21.430	50.005	17.526	18.288	13.970	38.0	39.0	3 850	3 950	8 000	11 000
21.986	45.974	15.494	16.637	12.065	29.6	34.0	3 000	3 450	8 400	11 000
22.225	50.005	13.495	14.260	9.525	26.0	27.9	2 650	2 850	7 500	10 000
	50.005	17.526	18.288	13.970	38.0	39.0	3 850	3 950	8 000	11 000
	52.388	19.368	20.168	14.288	40.5	43.0	4 150	4 350	7 600	10 000
	53.975	19.368	20.168	14.288	40.5	43.0	4 150	4 350	7 600	10 000

Note: 1. Chamfer dimensions on the back face of the inner and outer rings of the bearing are larger than maximum values for installation dimensions r_{as} and r_{1as}.
2. As for the maximum value for inner and outer ring diameters of bearings whose bearing numbers are marked with "†" (inner ring) and "††" (outer ring), the precision class is an integer for class 4 and class 2 bearings only.

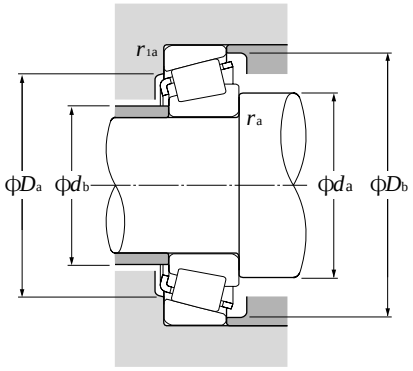

Equivalent radial load

dynamic

$P_r = XF_r + YF_a$

$\frac{F_a}{F_r} \leqq e$		$\frac{F_a}{F_r} > e$	
X	Y	X	Y
1	0	0.4	Y_2

static

$P_{or} = 0.5F_r + Y_oF_a$

When $P_{or} < F_r$ use $P_{or} = F_r$

For values of e, Y_2 and Y_o see the table below.

Bearing numbers	Abutment and fillet dimensions mm						Load center mm	Constant	Axial load factors		Mass kg
	d_a	d_b	D_a	D_b	r_{as} max	r_{1as} max	a	e	Y_2	Y_o	(approx.)
4T-A4050/A4138	18.5	17	29	32	1.3	1.3	2.5	0.45	1.32	0.73	0.053
4T-A4059†/A4138	19.5	19	29	32	0.8	1.3	2.5	0.45	1.32	0.73	0.049
4T-03062/03162	21.5	20	34	37.5	1.3	2	5.4	0.31	1.93	1.06	0.092
4T-11590/11520	24.5	22.5	34.5	39.5	1.5	1.5	1.2	0.70	0.85	0.47	0.103
4T-17580/17520	23	21	36.5	39	1.5	1.5	5.8	0.33	1.81	1.00	0.122
4T-05062/05185	23.5	21	40.5	42.5	1.5	1.3	4.2	0.36	1.68	0.92	0.131
4T-09062/09195	22	21.5	42	44.5	0.8	1.3	9.4	0.27	2.26	1.24	0.203
4T-05066/05185	24.5	22	40.5	42.5	1.5	1.3	4.2	0.36	1.68	0.92	0.127
4T-LM11749/LM11710	23	21.5	34	37	1.3	1.3	5.3	0.29	2.10	1.15	0.084
4T-A6075/A6157	24	23	34	37	1	1.3	1.5	0.53	1.14	0.63	0.065
4T-LM11949/LM11910	28	23.5	39.5	41.5	1.3	1.3	5.6	0.30	2.00	1.10	0.122
4T-05075/05185	25	23.5	40.5	42.5	1.3	1.3	4.2	0.36	1.68	0.92	0.121
4T-09067/09195	25.5	24	42	44.5	1.3	1.3	7.6	0.27	2.26	1.24	0.179
4T-09078/09195	25.5	24	42	44.5	1.3	1.3	9.4	0.27	2.26	1.24	0.188
4T-09067/09196	25.5	24	41.5	44.5	1.3	1.5	7.6	0.27	2.26	1.24	0.198
4T-21075/21212††	31.5	26	43	50	1.5	2.3	5.6	0.59	1.02	0.56	0.248
4T-1775/1729	27	25	49	51	1.5	1.3	6.5	0.31	1.95	1.07	0.272
4T-05079†/05185	26.5	24	40.5	42.5	1.5	1.3	4.2	0.36	1.68	0.92	0.117
4T-07079/07196	27.5	26	44.5	47	1.5	1	3.0	0.40	1.49	0.82	0.138
4T-09081/09195	27.5	25.5	42	44.5	1.5	1.3	9.4	0.27	2.26	1.24	0.179
4T-12580/12520	28.5	26	42.5	45.5	1.5	1.5	7.1	0.32	1.86	1.02	0.182
4T-M12649/M12610	29	25.5	44	46	1.3	1.3	6.4	0.28	2.16	1.19	0.169
4T-LM12749†/LM12711††	27.5	26	40	42.5	1.3	1.3	5.4	0.31	1.96	1.08	0.123
4T-07087/07196	28.5	27	44.5	47	1.3	1	3.0	0.40	1.49	0.82	0.13
4T-M12648/M12610	28.5	26.5	44	46	1.3	1.3	6.4	0.28	2.16	1.19	0.165
4T-1380/1328	29.5	27	45	48.5	1.5	1.5	7.4	0.29	2.05	1.13	0.2
4T-1380/1329††	29.5	27	46	49	1.5	1.5	7.4	0.29	2.05	1.13	0.215

Inch series

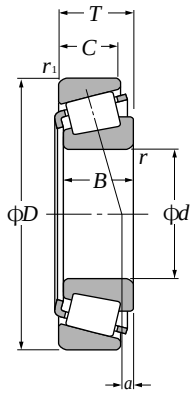

d 22.225～28.575mm

Boundary dimensions mm					Basic load ratings dynamic kN	static kN	dynamic kgf	static kgf	Limiting speeds min-1	
d	D	T	B	C	Cr	Cor	Cr	Cor	grease	oil
22.225	56.896	19.368	19.837	15.875	42.5	46.5	4 350	4 750	7 200	9 600
	57.150	22.225	22.225	17.462	47.0	49.5	4 800	5 050	7 100	9 500
22.606	47.000	15.500	15.500	12.000	27.5	32.5	2 800	3 300	8 200	11 000
23.812	50.005	13.495	14.260	9.525	26.0	27.9	2 650	2 850	7 500	10 000
	50.292	14.224	14.732	10.668	28.8	34.0	2 940	3 450	7 400	9 900
	56.896	19.368	19.837	15.875	42.5	46.5	4 350	4 750	7 200	9 600
24.981	50.005	13.495	14.260	9.525	26.0	27.9	2 650	2 850	7 500	10 000
25.000	50.005	13.495	14.260	9.525	26.0	27.9	2 650	2 850	7 500	10 000
25.159	50.005	13.495	14.260	9.525	26.0	27.9	2 650	2 850	7 500	10 000
25.400	50.005	13.495	14.260	9.525	26.0	27.9	2 650	2 850	7 500	10 000
	50.005	13.495	14.260	9.525	26.0	27.9	2 650	2 850	7 500	10 000
	50.292	14.224	14.732	10.668	28.8	34.0	2 940	3 450	7 400	9 900
	51.994	15.011	14.260	12.700	26.0	27.9	2 650	2 850	7 500	10 000
	56.896	19.368	19.837	15.875	42.5	46.5	4 350	4 750	7 200	9 600
	57.150	19.431	19.431	14.732	42.0	48.5	4 300	4 950	6 900	9 200
	61.912	19.050	20.638	14.288	46.5	54.0	4 750	5 500	6 100	8 200
	62.000	19.050	20.638	14.288	46.5	54.0	4 750	5 500	6 100	8 200
	62.000	19.050	20.638	14.288	46.5	54.0	4 750	5 500	6 100	8 200
	64.292	21.433	21.433	16.670	51.5	64.5	5 250	6 600	6 100	8 100
	65.088	22.225	21.463	15.875	47.0	50.5	4 800	5 150	5 700	7 600
	66.421	23.812	25.433	19.050	64.5	72.5	6 550	7 400	6 200	8 200
26.157	62.000	19.050	20.638	14.288	46.5	54.0	4 750	5 500	6 100	8 200
26.162	66.421	23.812	25.433	19.050	64.5	72.5	6 550	7 400	6 200	8 200
26.988	50.292	14.224	14.732	10.668	28.8	34.0	2 940	3 450	7 400	9 900
	60.325	19.842	17.462	15.875	39.5	45.5	4 050	4 650	6 700	8 900
	62.000	19.050	20.638	14.288	46.5	54.0	4 750	5 500	6 100	8 200
	66.421	23.812	25.433	19.050	64.5	72.5	6 550	7 400	6 200	8 200
28.575	56.896	19.845	19.355	15.875	40.5	44.5	4 150	4 550	6 700	8 900
	57.150	17.462	17.462	13.495	39.5	45.5	4 050	4 650	6 700	8 900

Note: 1. Chamfer dimensions on the back face of the inner and outer rings of the bearing are larger than maximum values for installation dimensions r_{as} and r_{1as}.
2. As for the maximum value for inner ring bore diameters of bearings whose bearing numbers are marked with "†" (inner ring), the precision class is an integer for class 4 and class 2 bearings only.

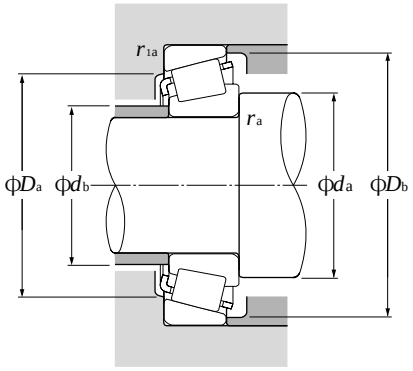

Equivalent radial load

dynamic

$P_r = XF_r + YF_a$

$\frac{F_a}{F_r} \leqq e$		$\frac{F_a}{F_r} > e$	
X	Y	X	Y
1	0	0.4	Y_2

static

$P_{or} = 0.5F_r + Y_oF_a$

When $P_{or} < F_r$ use $P_{or} = F_r$

For values of e, Y_2 and Y_o see the table below.

Bearing numbers	Abutment and fillet dimensions mm						Load center mm	Constant	Axial load factors		Mass kg
	d_a	d_b	D_a	D_b	r_{as} max	r_{1as} max	a	e	Y_2	Y_o	(approx.)
4T-1755/1729	29	27.5	49	51	1.3	1.3	6.5	0.31	1.95	1.07	0.256
4T-1280/1220	29.5	29	49	52	0.8	1.5	7.1	0.35	1.73	0.95	0.286
4T-LM72849/LM72810	30	28	40.5	44	1.5	1	3.0	0.47	1.27	0.70	0.125
4T-07093/07196	30.5	28.5	44.5	47	1.5	1	3.0	0.40	1.49	0.82	0.123
4T-L44640/L44610	30.5	28.5	44.5	47	1.5	1.3	3.4	0.37	1.60	0.88	0.137
4T-1779/1729	29.5	28.5	49	51	0.8	1.3	6.5	0.31	1.95	1.07	0.247
4T-07098/07196	31	29	44.5	47	1.5	1	3.0	0.40	1.49	0.82	0.118
4T-07097/07196	31	29	44.5	47	1.5	1	3.0	0.40	1.49	0.82	0.118
4T-07096/07196	31.5	29.5	44.5	47	1.5	1	3.0	0.40	1.49	0.82	0.117
4T-07100/07196	30.5	29.5	44.5	47	1	1	3.0	0.40	1.49	0.82	0.117
4T-07100S/07196	31.5	29.5	44.5	47	1.5	1	3.0	0.40	1.49	0.82	0.116
4T-L44643/L44610	31.5	29.5	44.5	47	1.3	1.3	3.4	0.37	1.60	0.88	0.13
4T-07100/07204	30.5	29.5	45	48	1	1.3	3.0	0.40	1.49	0.82	0.144
4T-1780/1729	30.5	30	49	51	0.8	1.3	6.5	0.31	1.95	1.07	0.238
4T-M84548/M84510	36	33	48.5	54	1.5	1.5	3.4	0.55	1.10	0.60	0.241
4T-15101/15243	32.5	31.5	54	58	0.8	2	6.0	0.35	1.71	0.94	0.3
4T-15100/15245	38	31.5	55	58	3.5	1.3	6.0	0.35	1.71	0.94	0.299
4T-15102/15245	34	31.5	55	58	1.5	1.3	6.0	0.35	1.71	0.94	0.301
4T-M86643/M86610	38	36.5	54	61	1.5	1.5	3.3	0.55	1.10	0.60	0.371
4T-23100/23256	39	34.5	53	63	1.5	1.5	2.0	0.73	0.82	0.45	0.36
4T-2687/2631	33.5	31.5	58	60	1.3	1.3	9.3	0.25	2.36	1.30	0.442
4T-15103/15245	33	32.5	55	58	0.8	1.3	6.0	0.35	1.71	0.94	0.296
4T-2682/2631	34.5	32	58	60	1.5	1.3	9.3	0.25	2.36	1.30	0.436
4T-L44649†/L44610	37.5	31	44.5	47	3.5	1.3	3.4	0.37	1.60	0.88	0.12
4T-15580†/15523	38.5	32	51	54	3.5	1.5	5.0	0.35	1.73	0.95	0.26
4T-15106†/15245	33.5	33	55	58	0.8	1.3	6.0	0.35	1.71	0.94	0.291
4T-2688†/2631	35	33	58	60	1.5	1.3	9.3	0.25	2.36	1.30	0.429
4T-1985/1930	34	33.5	51	54	0.8	0.8	6.7	0.33	1.82	1.00	0.217
4T-15590/15520	39.5	33.5	51	53	3.5	1.5	5.0	0.35	1.73	0.95	0.196

Inch series
J series

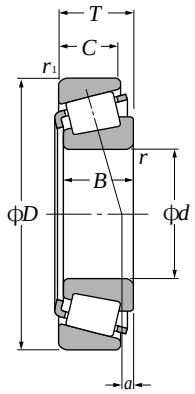

d 28.575～31.750mm

Boundary dimensions mm					Basic load ratings dynamic kN	static kN	dynamic kgf	static kgf	Limiting speeds min-1	
d	D	T	B	C	Cr	Cor	Cr	Cor	grease	oil
28.575	58.738	19.050	19.355	15.080	40.5	44.5	4 150	4 550	6 700	8 900
	60.325	19.842	17.462	15.875	39.5	45.5	4 050	4 650	6 700	8 900
	60.325	19.845	19.355	15.875	40.5	44.5	4 150	4 550	6 700	8 900
	62.000	19.050	20.638	14.288	46.5	54.0	4 750	5 500	6 100	8 200
	64.292	21.433	21.433	16.670	51.5	64.5	5 250	6 600	6 100	8 100
	66.421	23.812	25.433	19.050	64.5	72.5	6 550	7 400	6 200	8 200
	68.262	22.225	22.225	17.462	57.0	67.0	5 800	6 850	5 800	7 700
	68.262	22.225	23.812	17.462	57.5	65.5	5 850	6 700	5 700	7 700
	69.850	23.812	25.357	19.050	69.0	81.5	7 050	8 300	5 700	7 600
	72.626	24.608	24.257	17.462	58.0	55.5	5 900	5 700	5 800	7 700
	73.025	22.225	22.225	17.462	56.5	68.0	5 750	6 900	5 300	7 000
29.000	50.292	14.224	14.732	10.668	28.0	35.5	2 860	3 600	7 200	9 600
29.367	66.421	23.812	25.433	19.050	64.5	72.5	6 550	7 400	6 200	8 200
29.987	62.000	16.002	16.566	14.288	39.0	42.0	3 950	4 300	6 300	8 400
	62.000	19.050	20.638	14.288	46.5	54.0	4 750	5 500	6 100	8 200
30.000	69.012	19.845	19.583	15.875	48.5	58.0	4 900	5 900	5 600	7 400
	72.000	29.370	27.783	23.020	72.0	97.0	7 350	9 850	5 400	7 100
30.112	62.000	19.050	20.638	14.288	46.5	54.0	4 750	5 500	6 100	8 200
30.162	62.000	16.002	16.566	14.288	39.0	42.0	3 950	4 300	6 300	8 400
	64.292	21.433	21.433	16.670	51.5	64.5	5 250	6 600	6 100	8 100
	69.850	23.812	25.357	19.050	69.0	81.5	7 050	8 300	5 700	7 600
	72.626	30.162	29.997	23.812	84.5	98.0	8 600	9 950	5 500	7 300
30.213	62.000	19.050	20.638	14.288	46.5	54.0	4 750	5 500	6 100	8 200
	62.000	19.050	20.638	14.288	46.5	54.0	4 750	5 500	6 100	8 200
	62.000	19.050	20.638	14.288	46.5	54.0	4 750	5 500	6 100	8 200
30.226	69.012	19.845	19.583	15.875	48.5	58.0	4 900	5 900	5 600	7 400
	69.012	19.845	19.583	15.875	48.5	58.0	4 900	5 900	5 600	7 400
31.750	59.131	15.875	16.764	11.811	34.5	41.0	3 500	4 150	6 300	8 400
	62.000	18.161	19.050	14.288	46.5	54.0	4 750	5 500	6 100	8 200
	62.000	19.050	20.638	14.288	46.5	54.0	4 750	5 500	6 100	8 200

Note: 1. Chamfer dimensions on the back face of the inner and outer rings of the bearing are larger than maximum values for installation dimensions r_{as} and r_{1as}.
2. As for the maximum value for inner ring bore diameters of bearings whose bearing numbers are marked with "†" (inner ring), the precision class is an integer for class 4 and class 2 bearings only.

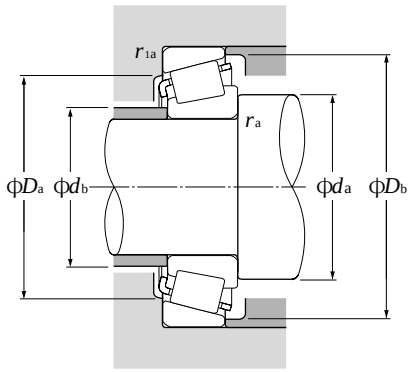

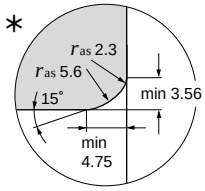

Equivalent radial load

dynamic

$P_r = XF_r + YF_a$

$\frac{F_a}{F_r} \leqq e$		$\frac{F_a}{F_r} > e$	
X	Y	X	Y
1	0	0.4	Y_2

static

$P_{or} = 0.5F_r + Y_oF_a$

When $P_{or} < F_r$ use $P_{or} = F_r$

For values of e, Y_2 and Y_o see the table below.

Bearing numbers	Abutment and fillet dimensions mm						Load center mm	Constant	Axial load factors		Mass kg
	d_a	d_b	D_a	D_b	r_{as} max	r_{1as} max	a	e	Y_2	Y_o	(approx.)
4T-1985/1932	34	33.5	52	54	0.8	1.3	5.9	0.33	1.82	1.00	0.23
4T-15590/15523	39.5	33.5	51	54	3.5	1.5	5.0	0.35	1.73	0.95	0.25
4T-1985/1931	34	33.5	52	55	0.8	1.3	5.9	0.33	1.82	1.00	0.255
4T-15112/15245	40	34	55	58	3.5	1.3	6.0	0.35	1.71	0.94	0.277
4T-M86647/M86610	40	38	54	61	1.5	1.5	3.3	0.55	1.10	0.60	0.348
4T-2689/2631	36	34	58	60	1.3	1.3	9.3	0.25	2.36	1.30	0.416
4T-02474/02420	36.5	36	59	63	0.8	1.5	5.2	0.42	1.44	0.79	0.409
4T-2474/2420	36	35	60	63	0.8	1.5	6.5	0.34	1.77	0.97	0.41
4T-2578/2523	39	35	61	64	2.3	1.3	9.1	0.27	2.19	1.21	0.483
4T-41125/41286	48	36.5	61	68	4.8	1.5	3.7	0.60	1.00	0.55	0.477
4T-02872/02820	37.5	37	62	68	0.8	3.3	3.9	0.45	1.32	0.73	0.48
4T-L45449/L45410	39.5	33	44.5	48	3.5	1.3	3.5	0.37	1.62	0.89	0.113
4T-2690/2631	41	35	58	60	3.5	1.3	9.3	0.25	2.36	1.30	0.406
4T-17118†/17244	37	34.5	54	57	1.5	1.5	3.3	0.38	1.57	0.86	0.228
4T-15117†/15245	36.5	35	55	58	1.3	1.3	6.0	0.35	1.71	0.94	0.269
4T-14117A/14276	42.5	39.5	60	63	3.5	1.3	4.1	0.38	1.57	0.86	0.369
# 4T-JHM88540/JHM88513	44.5	42.5	58	69	1.3	3.3	6.0	0.55	1.10	0.60	0.619
4T-15116/15245	36	35.5	55	58	0.8	1.3	6.0	0.35	1.71	0.94	0.268
4T-17119/17244	37	34.5	54	57	1.5	1.5	3.3	0.38	1.57	0.86	0.226
4T-M86649/M86610	41	38	54	61	1.5	1.5	3.3	0.55	1.10	0.60	0.336
4T-2558/2523	40	36.5	61	64	2.3	1.3	9.1	0.27	2.19	1.21	0.468
4T-3187/3120	39	38.5	61	67	0.8	3.3	9.9	0.33	1.80	0.99	0.621
4T-15118/15245	41.5	35.5	55	58	3.5	1.3	6.0	0.35	1.71	0.94	0.265
4T-15119/15245	37.5	35.5	55	58	1.5	1.3	6.0	0.35	1.71	0.94	0.267
4T-15120/15245	36	35.5	55	58	0.8	1.3	6.0	0.35	1.71	0.94	0.267
4T-14116/14274	37	36.5	59	63	0.8	3.3	4.1	0.38	1.57	0.86	0.366
4T-14116/14276	37	36.5	60	63	0.8	1.3	4.1	0.38	1.57	0.86	0.37
4T-LM67048/LM67010	42.5	36	52	56	∗	1.3	2.8	0.41	1.46	0.80	0.182
4T-15123/15245	42.5	36.5	55	58	∗	1.3	5.1	0.35	1.71	0.94	0.244
4T-15125/15245	42.5	36.5	55	58	3.5	1.3	6.0	0.35	1.71	0.94	0.253

Note: 3. Bearing numbers marked " # " designate **J-series** bearings. The tolerances of these bearings is listed in **Table 6.6** on **page A-42**.
4. Chamfer dimensions of bearings marked " ∗ " are shown in drawings.

Inch series
J series

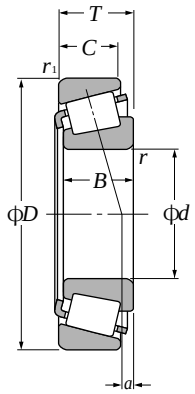

d 31.750～34.925mm

Boundary dimensions mm					Basic load ratings dynamic kN	static kN	dynamic kgf	static kgf	Limiting speeds min-1	
d	D	T	B	C	Cr	Cor	Cr	Cor	grease	oil
31.750	62.000	19.050	20.638	14.288	46.5	54.0	4 750	5 500	6 100	8 200
	66.421	25.400	25.357	20.638	69.0	81.5	7 050	8 300	5 700	7 600
	68.262	22.225	22.225	17.462	57.0	67.0	5 800	6 850	5 800	7 700
	68.262	22.225	22.225	17.462	57.0	67.0	5 800	6 850	5 800	7 700
	69.012	19.845	19.583	15.875	48.5	58.0	4 900	5 900	5 600	7 400
	69.012	19.845	19.583	15.875	48.5	58.0	4 900	5 900	5 600	7 400
	69.850	23.812	25.357	19.050	69.0	81.5	7 050	8 300	5 700	7 600
	69.850	23.812	25.357	19.050	69.0	81.5	7 050	8 300	5 700	7 600
	72.626	30.162	29.997	23.812	84.5	98.0	8 600	9 950	5 500	7 300
	72.626	30.162	29.997	23.812	84.5	98.0	8 600	9 950	5 500	7 300
	73.025	22.225	22.225	17.462	56.5	68.0	5 750	6 900	5 300	7 000
	73.025	22.225	23.812	17.462	62.5	75.5	6 400	7 700	5 200	7 000
	73.025	29.370	27.783	23.020	72.0	97.0	7 350	9 850	5 400	7 100
	73.812	29.370	27.783	23.020	72.0	97.0	7 350	9 850	5 400	7 100
	76.200	29.370	28.575	23.020	78.0	105	7 950	10 700	5 100	6 800
	79.375	29.370	29.771	23.812	93.0	114	9 450	11 600	4 900	6 600
33.338	68.262	22.225	22.225	17.462	56.5	71.0	5 750	7 250	5 700	7 500
	69.012	19.845	19.583	15.875	48.5	58.0	4 900	5 900	5 600	7 400
	69.850	23.812	25.357	19.050	69.0	81.5	7 050	8 300	5 700	7 600
	72.626	30.162	29.997	23.812	84.5	98.0	8 600	9 950	5 500	7 300
	73.025	29.370	27.783	23.020	72.0	97.0	7 350	9 850	5 400	7 100
	76.200	23.812	25.654	19.050	73.0	90.5	7 450	9 200	5 100	6 800
	76.200	29.370	28.575	23.020	78.0	105	7 950	10 700	5 100	6 800
	76.200	29.370	28.575	23.020	78.0	105	7 950	10 700	5 100	6 800
	79.375	25.400	24.074	17.462	65.5	67.0	6 650	6 800	5 200	6 900
34.925	65.088	18.034	18.288	13.970	46.5	56.0	4 750	5 700	5 700	7 600
	65.088	18.034	18.288	13.970	46.5	56.0	4 750	5 700	5 700	7 600
	69.012	19.845	19.583	15.875	48.5	58.0	4 900	5 900	5 600	7 400
	72.233	25.400	25.400	19.842	65.0	84.5	6 600	8 600	5 400	7 200
	72.238	20.638	20.638	15.875	48.0	58.5	4 900	5 950	5 300	7 000
	73.025	22.225	22.225	17.462	56.5	68.0	5 750	6 900	5 300	7 000
	73.025	22.225	22.225	17.462	56.5	68.0	5 750	6 900	5 300	7 000
	73.025	22.225	23.812	17.462	62.5	75.5	6 400	7 700	5 200	7 000
	73.025	23.812	24.608	19.050	71.0	85.0	7 200	8 700	5 300	7 100
	73.025	23.812	24.608	19.050	71.0	85.0	7 200	8 700	5 300	7 100
	73.025	23.812	25.654	19.050	73.0	90.5	7 450	9 200	5 100	6 800
	76.200	23.812	25.654	19.050	73.0	90.5	7 450	9 200	5 100	6 800

Note: 1. Chamfer dimensions on the back face of the inner and outer rings of the bearing are larger than maximum values for installation dimensions r_{as} and r_{1as}.
2. Chamfer dimensions of bearings marked " ∗ " are shown in drawings.

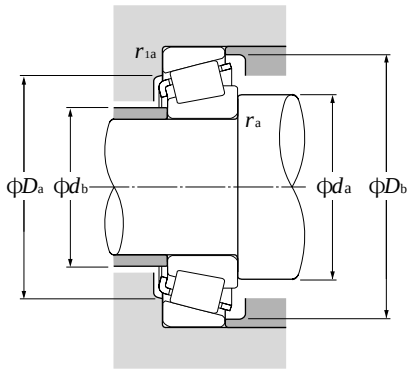

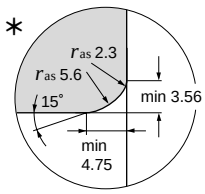

Equivalent radial load

dynamic

$P_r = XF_r + YF_a$

$\frac{F_a}{F_r} \leqq e$		$\frac{F_a}{F_r} > e$	
X	Y	X	Y
1	0	0.4	Y_2

static

$P_{or} = 0.5F_r + Y_oF_a$

When $P_{or} < F_r$ use $P_{or} = F_r$

For values of e, Y_2 and Y_o see the table below.

Bearing numbers	Abutment and fillet dimensions mm						Load center mm	Constant	Axial load factors		Mass kg
	d_a	d_b	D_a	D_b	r_{as} max	r_{1as} max	a	e	Y_2	Y_o	(approx.)
4T-15126/15245	37	36.5	55	58	0.8	1.3	6.0	0.35	1.71	0.94	0.255
4T-2580/2520	38.5	37.5	57	62	0.8	3.3	9.1	0.27	2.19	1.21	0.409
4T-02475/02420	44.5	38.5	59	63	3.5	1.5	5.2	0.42	1.44	0.79	0.38
4T-02476/02420	39	38.5	59	63	0.8	1.5	5.2	0.42	1.44	0.79	0.383
4T-14124/14276	38.5	37.5	60	63	0.8	1.3	4.1	0.38	1.57	0.86	0.359
4T-14125A/14276	44	37.5	60	63	3.5	1.3	4.1	0.38	1.57	0.86	0.356
4T-2580/2523	38.5	37.5	61	64	0.8	1.3	9.1	0.27	2.19	1.21	0.454
4T-2582/2523	44	37.5	61	64	3.5	1.3	9.1	0.27	2.19	1.21	0.451
4T-3188/3120	40	39.5	61	67	0.8	3.3	9.9	0.33	1.80	0.99	0.603
4T-3193/3120	45.5	39.5	61	67	3.5	3.3	9.9	0.33	1.80	0.99	0.601
4T-02875/02820	45.5	39.5	62	68	3.5	3.3	3.9	0.45	1.32	0.73	0.451
4T-2879/2820	39.5	38.5	63	68	0.8	3.3	5.5	0.37	1.63	0.90	0.465
4T-HM88542/HM88510	45.5	42.5	59	70	1.3	3.3	6.0	0.55	1.10	0.60	0.622
4T-HM88542/HM88512	45.5	42.5	60	70	1.3	3.3	6.0	0.55	1.10	0.60	0.638
4T-HM89440/HM89410	45.5	44.5	62	73	0.8	3.3	5.8	0.55	1.10	0.60	0.686
4T-3476/3420	43	41	67	74	1.3	3.3	8.7	0.37	1.64	0.90	0.767
4T-M88048/M88010	42.5	41	58	65	0.8	1.5	2.9	0.55	1.10	0.60	0.378
4T-14130/14276	45	38.5	60	63	3.5	1.3	4.1	0.38	1.57	0.86	0.344
4T-2585/2523	45	39	61	64	3.5	1.3	9.1	0.27	2.19	1.21	0.435
4T-3196/3120	47	40.5	61	67	3.5	3.3	9.9	0.33	1.80	0.99	0.581
4T-HM88547/HM88510	45.5	42.5	59	70	0.8	3.3	6.0	0.55	1.10	0.60	0.604
4T-2785/2720	46	40	66	70	3.5	3.3	7.8	0.30	1.98	1.09	0.551
4T-HM89443/HM89410	46.5	44.5	62	73	0.8	3.3	5.8	0.55	1.10	0.60	0.668
4T-HM89444/HM89410	53	44.5	62	73	3.8	3.3	5.8	0.55	1.10	0.60	0.665
4T-43131/43312	51	42	67	74	3.5	1.5	1.4	0.67	0.90	0.49	0.568
4T-LM48548/LM48510	46	40	58	61	∗	1.3	3.7	0.38	1.59	0.88	0.249
4T-LM48548A/LM48510	40.5	42	58	61	0.8	1.3	3.7	0.38	1.59	0.88	0.252
4T-14137A/14276	42	40	60	63	1.5	1.3	4.1	0.38	1.57	0.86	0.333
4T-HM88649/HM88610	48.5	42.5	60	69	2.3	2.3	4.6	0.55	1.10	0.60	0.489
4T-16137/16284	47	40.5	63	67	3.5	1.3	4.2	0.40	1.49	0.82	0.385
4T-02877/02820	48.5	42	62	68	3.5	3.3	3.9	0.45	1.32	0.73	0.422
4T-02878/02820	42.5	42	62	68	0.8	3.3	3.9	0.45	1.32	0.73	0.425
4T-2878/2820	42	41	63	68	0.8	3.3	5.5	0.37	1.63	0.90	0.434
4T-25877/25820	43	40.5	64	68	1.5	2.3	8.1	0.29	2.07	1.14	0.471
4T-25877/25821	43	40.5	65	68	1.5	0.8	8.1	0.29	2.07	1.14	0.474
4T-2793/2735X	42	41	66	69	0.8	0.8	7.8	0.30	1.98	1.09	0.485
4T-2793/2720	42	41	66	70	0.8	3.3	7.8	0.30	1.98	1.09	0.536

Inch series
J series

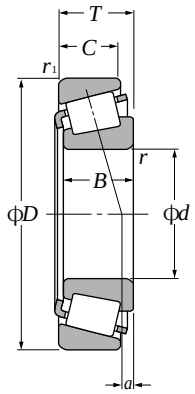

d 34.925～38.100mm

Boundary dimensions mm					Basic load ratings dynamic kN	static kN	dynamic kgf	static kgf	Limiting speeds min-1	
d	D	T	B	C	Cr	Cor	Cr	Cor	grease	oil
34.925	76.200	23.812	25.654	19.050	73.0	90.5	7 450	9 200	5 100	6 800
	76.200	29.370	28.575	23.020	78.0	105	7 950	10 700	5 100	6 800
	76.200	29.370	28.575	23.812	80.5	97.0	8 200	9 900	5 100	6 800
	76.200	29.370	28.575	23.812	80.5	97.0	8 200	9 900	5 100	6 800
	79.375	29.370	29.771	23.812	93.0	114	9 450	11 600	4 900	6 600
	80.167	29.370	30.391	23.812	95.0	112	9 700	11 400	4 800	6 400
	85.725	30.162	30.162	23.812	105	132	10 700	13 400	4 500	6 000
34.976	69.012	19.845	19.583	15.875	48.5	58.0	4 900	5 900	5 600	7 400
34.988	59.974	15.875	16.764	11.938	35.5	47.5	3 600	4 850	6 100	8 100
	61.973	16.700	17.000	13.600	37.0	48.0	3 800	4 900	5 900	7 900
	61.973	18.000	17.000	15.000	37.0	48.0	3 800	4 900	5 900	7 900
35.000	70.000	24.000	23.500	19.000	62.0	78.0	6 350	7 950	5 500	7 300
	79.375	23.812	25.400	19.050	76.5	97.5	7 800	9 950	4 800	6 400
	80.000	21.000	22.403	17.826	68.0	75.0	6 950	7 650	4 700	6 300
35.717	72.233	25.400	25.400	19.842	65.0	84.5	6 600	8 600	5 400	7 200
	72.626	25.400	25.400	19.842	65.0	84.5	6 600	8 600	5 400	7 200
36.487	73.025	23.812	24.608	19.050	71.0	85.0	7 200	8 700	5 300	7 100
	76.200	23.812	25.654	19.050	73.0	90.5	7 450	9 200	5 100	6 800
36.512	76.200	29.370	28.575	23.020	78.0	105	7 950	10 700	5 100	6 800
	76.200	29.370	28.575	23.020	78.0	105	7 950	10 700	5 100	6 800
	76.200	29.370	28.575	23.812	80.5	97.0	8 200	9 900	5 100	6 800
	79.375	29.370	28.829	22.664	86.5	104	8 800	10 600	5 000	6 600
	79.375	29.370	29.771	23.812	93.0	114	9 450	11 600	4 900	6 600
	88.500	25.400	23.698	17.462	70.5	78.0	7 200	7 950	4 000	5 300
38.000	63.000	17.000	17.000	13.500	38.5	52.5	3 950	5 350	5 700	7 600
38.100	63.500	12.700	11.908	9.525	25.9	33.5	2 640	3 400	5 500	7 300
	65.088	18.034	18.288	13.970	43.5	57.0	4 400	5 800	5 500	7 400
	69.012	19.050	19.050	15.083	47.5	59.5	4 850	6 050	5 300	7 100
	69.012	19.050	19.050	15.083	47.5	59.5	4 850	6 050	5 300	7 100
	71.438	15.875	16.520	11.908	43.5	51.0	4 400	5 200	5 400	7 200
	72.000	19.000	20.638	14.237	48.0	58.5	4 900	5 950	5 300	7 000

Note: 1. Chamfer dimensions on the back face of the inner and outer rings of the bearing are larger than maximum values for installation dimensions r_{as} and r_{1as}.
2. As for the maximum value for inner and outer ring diameters of bearings whose bearing numbers are marked with "†" (inner ring) and "††" (outer ring), the precision class is an integer for class 4 and class 2 bearings only.

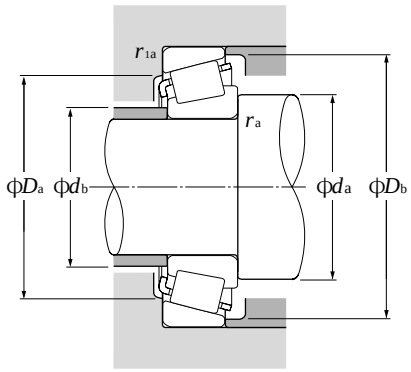

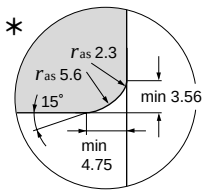

Equivalent radial load

dynamic

$P_r = XF_r + YF_a$

$\frac{F_a}{F_r} \leqq e$		$\frac{F_a}{F_r} > e$	
X	Y	X	Y
1	0	0.4	Y_2

static

$P_{or} = 0.5F_r + Y_oF_a$

When $P_{or} < F_r$ use $P_{or} = F_r$

For values of e, Y_2 and Y_o see the table below.

Bearing numbers	Abutment and fillet dimensions mm						Load center mm	Constant	Axial load factors		Mass kg
	d_a	d_b	D_a	D_b	r_{as} max	r_{1as} max	a	e	Y_2	Y_o	(approx.)
4T-2793/2729	42	41	68	70	0.8	0.8	7.8	0.30	1.98	1.09	0.541
4T-HM89446/HM89410	53	44.5	62	73	3.5	3.3	5.8	0.55	1.10	0.60	0.646
4T-31593/31520	50	43.5	64	72	3.5	3.3	7.8	0.40	1.49	0.82	0.625
4T-31594/31520	46	43.5	64	72	1.5	3.3	7.8	0.40	1.49	0.82	0.627
4T-3478/3420	50	43.5	67	74	3.5	3.3	8.7	0.37	1.64	0.90	0.725
4T-3379/3320	48	41.5	70	75	3.5	3.3	11.2	0.27	2.20	1.21	0.732
4T-3872/3820	53	46	73	81	3.5	3.3	8.1	0.40	1.49	0.82	0.897
4T-14139/14276	41.5	40	60	63	1.3	1.3	4.1	0.38	1.57	0.86	0.333
4T-L68149†/L68111††	45.5	39	53	56	∗	1.3	2.5	0.42	1.44	0.79	0.179
4T-LM78349A†/LM78310A††	42	39.5	54	59	1.5	1.5	2.4	0.44	1.35	0.74	0.209
4T-LM78349†/LM78310C††	46	40	56	59	∗	1.5	2.4	0.44	1.35	0.74	0.218
# 4T-JS3549A/JS3510	47	42	60	67	2	1.5	3.6	0.55	1.10	0.60	0.42
4T-26883/26822	42.5	42	71	74	0.8	0.8	7.4	0.32	1.88	1.04	0.61
4T-339/332	42.5	41.5	73	75	0.8	1.3	6.6	0.27	2.20	1.21	0.534
4T-HM88648/HM88610	52	43	60	69	3.5	2.3	4.6	0.55	1.10	0.60	0.478
4T-HM88648/HM88611AS	52	43	59	69	3.5	3.3	3.0	0.55	1.10	0.60	0.482
4T-25880/25821	44	42	65	68	1.5	0.8	8.1	0.29	2.07	1.14	0.457
4T-2780/2720	44.5	42.5	66	70	1.5	3.3	7.8	0.30	1.98	1.09	0.518
4T-HM89448/HM89410	48.5	44.5	62	73	0.8	3.3	5.8	0.55	1.10	0.60	0.629
4T-HM89449/HM89411	54	44.5	65	73	3.5	0.8	5.8	0.55	1.10	0.60	0.631
4T-31597/31520	51	44.5	64	72	3.5	3.3	7.8	0.40	1.49	0.82	0.605
4T-HM89249/HM89210	55	44	66	75	3.5	3.3	5.8	0.55	1.10	0.60	0.686
4T-3479/3420	45.5	44.5	67	74	0.8	3.3	8.7	0.37	1.64	0.90	0.707
4T-44143/44348	54	50	75	84	2.3	1.5	–2.9	0.78	0.77	0.42	0.729
# 4T-JL69349/JL69310	49	42.5	56	60	∗	1.3	2.3	0.42	1.44	0.79	0.198
4T-13889/13830	45	42.5	59	60	1.5	0.8	0.8	0.35	1.73	0.95	0.147
4T-LM29748/LM29710	49	42.5	59	62	∗	1.3	4.3	0.33	1.80	0.99	0.233
4T-13685/13621	49.5	43	61	65	3.5	2.3	3.0	0.40	1.49	0.82	0.293
4T-13687/13621	46.5	43	61	65	2	2.3	3.0	0.40	1.49	0.82	0.296
4T-19150/19281	45	43	63	66	1.5	1	1.4	0.44	1.35	0.74	0.273
4T-16150/16282	49.5	43	63	67	3.5	1.5	4.2	0.40	1.49	0.82	0.331

Note: 3. Bearing numbers marked " # " designate **J-series** bearings. The tolerances of these bearings is listed in **Table 6.6** on **page A-42**.
4. Chamfer dimensions of bearings marked " ∗ " are shown in drawings.

Inch series

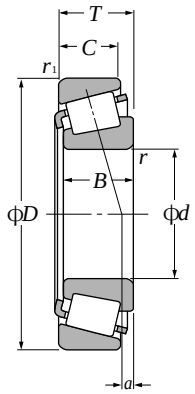

d 38.100～41.275mm

Boundary dimensions mm					Basic load ratings dynamic kN	static kN	dynamic kgf	static kgf	Limiting speeds min-1	
d	D	T	B	C	Cr	Cor	Cr	Cor	grease	oil
38.100	76.200	20.638	20.940	15.507	55.5	63.0	5 650	6 450	5 000	6 700
	76.200	23.812	25.654	19.050	73.0	90.5	7 450	9 200	5 100	6 800
	76.200	23.812	25.654	19.050	73.0	90.5	7 450	9 200	5 100	6 800
	79.375	23.812	25.400	19.050	76.5	97.5	7 800	9 950	4 800	6 400
	79.375	29.370	29.771	23.812	93.0	114	9 450	11 600	4 900	6 600
	80.000	21.006	20.940	15.875	55.5	63.0	5 650	6 450	5 000	6 700
	80.035	24.608	23.698	18.512	67.0	82.5	6 850	8 400	4 800	6 400
	82.550	29.370	28.575	23.020	87.0	117	8 850	11 900	4 700	6 200
	82.931	23.812	25.400	19.050	76.0	98.0	7 750	10 000	4 500	6 000
	85.725	30.162	30.162	23.812	105	132	10 700	13 400	4 500	6 000
	87.312	30.162	30.886	23.812	94.0	117	9 600	12 000	4 400	5 900
	88.500	25.400	23.698	17.462	70.5	78.0	7 200	7 950	4 000	5 300
	88.500	26.988	29.083	22.225	95.5	107	9 750	10 900	4 600	6 100
39.688	76.200	23.812	25.654	19.050	73.0	90.5	7 450	9 200	5 100	6 800
	77.534	29.370	30.391	23.812	95.0	112	9 700	11 400	4 800	6 400
	79.375	23.812	25.400	19.050	76.5	97.5	7 800	9 950	4 800	6 400
	80.035	29.370	30.391	23.812	95.0	112	9 700	11 400	4 800	6 400
	80.167	29.370	30.391	23.812	95.0	112	9 700	11 400	4 800	6 400
	88.500	25.400	23.698	17.462	70.5	78.0	7 200	7 950	4 000	5 300
40.000	76.200	20.638	20.940	15.507	55.5	63.0	5 650	6 450	5 000	6 700
	80.000	21.000	22.403	17.826	68.0	75.0	6 950	7 650	4 700	6 300
	85.000	20.638	21.692	17.462	69.5	79.5	7 100	8 100	4 400	5 800
	88.500	26.988	29.083	22.225	95.5	107	9 750	10 900	4 600	6 100
	107.950	36.512	36.957	28.575	141	177	14 400	18 100	3 600	4 800
40.483	82.550	29.370	28.575	23.020	87.0	117	8 850	11 900	4 700	6 200
40.988	67.975	17.500	18.000	13.500	46.0	62.5	4 700	6 400	5 300	7 000
41.275	73.025	16.667	17.462	12.700	46.0	55.5	4 700	5 700	5 000	6 600
	73.431	19.558	19.812	14.732	56.0	69.5	5 700	7 100	5 000	6 600
	73.431	21.430	19.812	16.604	56.0	69.5	5 700	7 100	5 000	6 600
	76.200	18.009	17.384	14.288	42.5	51.5	4 350	5 250	4 900	6 500
	76.200	22.225	23.020	17.462	65.0	80.5	6 600	8 200	4 900	6 500
	76.200	25.400	25.400	20.638	76.5	97.5	7 800	9 950	4 800	6 400
	79.375	23.812	25.400	19.050	76.5	97.5	7 800	9 950	4 800	6 400
	80.000	18.009	17.384	14.288	42.5	51.5	4 350	5 250	4 900	6 500

Note: 1. Chamfer dimensions on the back face of the inner and outer rings of the bearing are larger than maximum values for installation dimensions r_{as} and r_{1as}.
2. As for the maximum value for inner and outer ring diameters of bearings whose bearing numbers are marked with "†" (inner ring) and "††" (outer ring), the precision class is an integer for class 4 and class 2 bearings only.

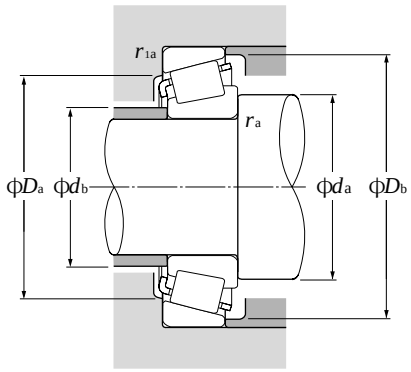

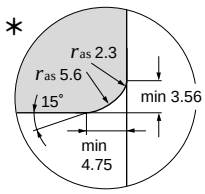

Equivalent radial load
dynamic

$P_r = XF_r + YF_a$

$\frac{F_a}{F_r} \leqq e$		$\frac{F_a}{F_r} > e$	
X	Y	X	Y
1	0	0.4	Y_2

static

$P_{or} = 0.5F_r + Y_oF_a$

When $P_{or} < F_r$ use $P_{or} = F_r$

For values of e, Y_2 and Y_o see the table below.

Bearing numbers	Abutment and fillet dimensions mm						Load center mm	Constant	Axial load factors		Mass kg
	d_a	d_b	D_a	D_b	r_{as} max	r_{1as} max	a	e	Y_2	Y_o	(approx.)
4T-28150/28300	45.5	43.5	68	71	1.5	1.3	4.8	0.40	1.49	0.82	0.405
4T-2776/2720	52	43.5	66	70	4.3	3.3	7.8	0.30	1.98	1.09	0.495
4T-2788/2720	50	43.5	66	70	3.5	3.3	7.8	0.30	1.98	1.09	0.497
4T-26878/26822	45	44.5	71	74	0.8	0.8	7.4	0.32	1.88	1.04	0.574
4T-3490/3420	52	45.5	67	74	3.5	3.3	8.7	0.37	1.64	0.90	0.683
4T-28150/28315	45.5	43.5	69	73	1.5	1.5	4.8	0.40	1.49	0.82	0.467
4T-27880/27820	48	47	68	75	0.8	1.5	2.5	0.56	1.07	0.59	0.562
4T-HM801346/HM801310	51	49	68	78	0.8	3.3	4.7	0.55	1.10	0.60	0.767
4T-25572/25520	46	46	74	77	0.8	0.8	6.2	0.33	1.79	0.99	0.645
4T-3875/3820	49.5	48.5	73	81	0.8	3.3	8.1	0.40	1.49	0.82	0.857
4T-3580/3525	48	45.5	75	81	1.5	3.3	10.0	0.31	1.96	1.08	0.881
4T-44150/44348	55	51	75	84	2.3	1.5	–2.9[1)]	0.78	0.77	0.42	0.711
4T-418/414	51	44.5	77	80	3.5	1.5	9.1	0.26	2.28	1.25	0.84
4T-2789/2720	52	45	66	70	3.5	3.3	7.8	0.30	1.98	1.09	0.477
4T-3382/3321	52	45.5	68	75	3.5	3.3	11.2	0.27	2.20	1.21	0.669
4T-26880/26822	48	45.5	71	74	1.5	0.8	7.4	0.32	1.88	1.04	0.554
4T-3382/3339	52	45.5	71	75	3.5	1.5	11.2	0.27	2.20	1.21	0.666
4T-3386/3320	46.5	45.5	70	75	0.8	3.3	11.2	0.27	2.20	1.21	0.668
4T-44158/44348	58	51	75	84	3.5	1.5	–2.9[1)]	0.78	0.77	0.42	0.691
4T-28158/28300	47.5	45	68	71	1.5	1.3	4.8	0.40	1.49	0.82	0.386
4T-344/332	52	45.5	73	75	3.5	1.3	6.6	0.27	2.20	1.21	0.479
4T-350A/354A	47.5	46.5	77	80	0.8	1.3	5.1	0.31	1.96	1.08	0.562
4T-420/414	52	46	77	80	3.5	1.5	9.1	0.26	2.28	1.25	0.813
4T-543/532X	57	50	94	100	3.5	3.3	12.3	0.30	2.02	1.11	1.77
4T-HM801349/HM801310	58	49	68	78	3.5	3.3	4.7	0.55	1.10	0.60	0.731
4T-LM300849†/LM300811††	52	45	61	65	∗	1.5	3.6	0.35	1.72	0.95	0.239
4T-18590/18520	53	46	66	69	3.5	1.5	2.9	0.35	1.71	0.94	0.281
4T-LM501349/LM501310	53	46.5	67	70	3.5	0.8	3.3	0.40	1.50	0.83	0.335
4T-LM501349/LM501314	53	46.5	66	70	3.5	0.8	3.3	0.40	1.50	0.83	0.355
4T-11162/11300	49	46.5	67	71	1.5	1.5	0.7	0.49	1.23	0.68	0.337
4T-24780/24720	54	47	68	72	3.5	0.8	4.5	0.39	1.53	0.84	0.432
4T-26882/26823	54	47	69	73	3.5	1.5	7.4	0.32	1.88	1.04	0.488
4T-26885/26822	48	47	71	74	0.8	0.8	7.4	0.32	1.88	1.04	0.535
4T-11162/11315	49	46.5	69	73	1.5	1.5	0.7	0.49	1.23	0.68	0.389

Note: 3. Chamfer dimensions of bearings marked " ∗ " are shown in drawings.
1) "—" means that load center at outside on end of inner ring.

Inch series

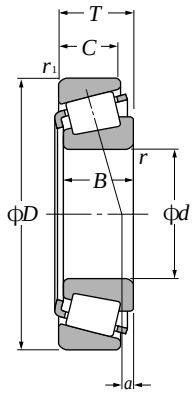

d 41.275～44.450mm

Boundary dimensions mm					Basic load ratings dynamic kN	static kN	dynamic kgf	static kgf	Limiting speeds min-1	
d	D	T	B	C	Cr	Cor	Cr	Cor	grease	oil
41.275	80.000	21.000	22.403	17.826	68.0	75.0	6 950	7 650	4 700	6 300
	80.000	23.812	25.400	19.050	76.5	97.5	7 800	9 950	4 800	6 400
	82.550	26.543	25.654	20.193	80.5	104	8 200	10 600	4 600	6 100
	85.725	30.162	30.162	23.812	105	132	10 700	13 400	4 500	6 000
	87.312	30.162	30.886	23.812	94.0	117	9 600	12 000	4 400	5 900
	88.900	30.162	29.370	23.020	93.5	125	9 550	12 700	4 300	5 800
	90.488	39.688	40.386	33.338	136	175	13 900	17 900	4 300	5 800
	92.075	26.195	23.812	16.670	72.5	81.5	7 400	8 300	3 800	5 000
	93.662	31.750	31.750	26.195	104	131	10 600	13 400	4 100	5 500
	95.250	30.162	29.370	23.020	109	147	11 100	15 000	4 000	5 300
	95.250	30.958	28.300	20.638	82.5	92.0	8 400	9 350	3 700	5 000
	95.250	30.958	28.575	22.225	96.0	116	9 800	11 800	3 700	4 900
42.070	90.488	39.688	40.386	33.338	136	175	13 900	17 900	4 300	5 800
42.862	82.550	26.195	26.988	20.638	75.5	97.0	7 700	9 900	4 600	6 100
	82.931	23.812	25.400	19.050	76.0	98.0	7 750	10 000	4 500	6 000
	87.312	30.162	30.886	23.812	94.0	117	9 600	12 000	4 400	5 900
42.875	79.375	23.812	25.400	19.050	76.5	97.5	7 800	9 950	4 800	6 400
	82.931	23.812	25.400	19.050	76.0	98.0	7 750	10 000	4 500	6 000
44.450	76.992	17.462	17.145	11.908	44.0	54.0	4 450	5 550	4 700	6 300
	79.375	17.462	17.462	13.495	45.5	56.0	4 600	5 700	4 600	6 200
	82.931	23.812	25.400	19.050	76.0	98.0	7 750	10 000	4 500	6 000
	82.931	23.812	25.400	19.050	76.0	98.0	7 750	10 000	4 500	6 000
	84.138	30.162	30.886	23.812	94.0	117	9 600	12 000	4 400	5 900
	85.000	20.638	21.692	17.462	69.5	79.5	7 100	8 100	4 400	5 800
	87.312	30.162	30.886	23.812	94.0	117	9 600	12 000	4 400	5 900
	88.900	30.162	29.370	23.020	93.5	125	9 550	12 700	4 300	5 800
	93.264	30.162	30.302	23.812	102	134	10 400	13 700	4 000	5 300
	93.662	31.750	31.750	26.195	103	131	10 600	13 400	4 100	5 500
	95.250	27.783	28.575	22.225	107	139	10 900	14 200	3 900	5 200
	95.250	27.783	29.900	22.225	108	129	11 000	13 200	4 200	5 600
	95.250	30.162	29.370	23.020	109	147	11 100	15 000	4 000	5 300
	95.250	30.958	28.300	20.638	82.5	92.0	8 400	9 350	3 700	5 000
	95.250	30.958	28.575	22.225	96.0	116	9 800	11 800	3 700	4 900
	101.600	34.925	36.068	26.988	135	165	13 800	16 800	3 800	5 000
	104.775	30.162	29.317	24.605	115	148	11 700	15 000	3 500	4 700

Note: 1. Chamfer dimensions on the back face of the inner and outer rings of the bearing are larger than maximum values for installation dimensions r_{as} and r_{1as}.

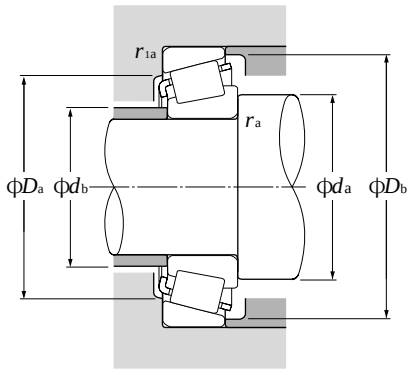

Equivalent radial load
dynamic

$P_r = XF_r + YF_a$

$\frac{F_a}{F_r} \leqq e$		$\frac{F_a}{F_r} > e$	
X	Y	X	Y
1	0	0.4	Y_2

static

$P_{or} = 0.5F_r + Y_oF_a$

When $P_{or} < F_r$ use $P_{or} = F_r$

For values of e, Y_2 and Y_o see the table below.

Bearing numbers	Abutment and fillet dimensions mm						Load center mm	Constant	Axial load factors		Mass kg
	d_a	d_b	D_a	D_b	r_{as} max	r_{1as} max	a	e	Y_2	Y_o	(approx.)
4T-336/332	47	46	73	75	0.8	1.3	6.6	0.27	2.20	1.21	0.468
4T-26882/26824	54	47	70	74	3.5	1.3	7.4	0.32	1.88	1.04	0.542
4T-M802048/M802011	57	51	70	79	3.5	3.3	3.2	0.55	1.10	0.60	0.642
4T-3880/3820	52	50	73	81	0.8	3.3	8.1	0.40	1.49	0.82	0.81
4T-3576/3525	49	48	75	81	0.8	3.3	10.0	0.31	1.96	1.08	0.834
4T-HM803145/HM803110	54	53	74	85	0.8	3.3	4.6	0.55	1.10	0.60	0.901
4T-4388/4335	57	51	77	85	3.5	3.3	15.0	0.28	2.11	1.16	1.25
4T-M903345/M903310	60	54	78	88	3.5	1.5	– 3.6[1)]	0.83	0.72	0.40	0.758
4T-46162/46368	52	51	79	87	0.8	3.3	7.1	0.40	1.49	0.82	1.09
4T-HM804840/HM804810	61	54	81	91	3.5	3.3	3.7	0.55	1.10	0.60	1.08
4T-53162/53375	57	53	81	89	1.5	0.8	0.5	0.74	0.81	0.45	0.975
4T-HM903245/HM903210	63	54	81	91	3.5	0.8	– 0.4[1)]	0.74	0.81	0.45	1.05
4T-4395/4335	58	51	77	85	3.5	3.3	15.0	0.28	2.11	1.16	1.24
4T-22780/22720	56	50	71	77	3.5	3.3	6.4	0.40	1.49	0.82	0.617
4T-25578/25520	53	49.5	74	77	2.3	0.8	6.2	0.33	1.79	0.99	0.584
4T-3579/3525	56	49.5	75	81	3.5	3.3	10.0	0.31	1.96	1.08	0.805
4T-26884/26822	55	48.5	71	74	3.5	0.8	7.4	0.32	1.88	1.04	0.51
4T-25577/25520	55	49	74	77	3.5	0.8	6.2	0.33	1.79	0.99	0.581
4T-12175/12303	52	49.5	68	73	1.5	1.5	– 0.2[1)]	0.51	1.19	0.65	0.308
4T-18685/18620	54	49.5	71	74	2.8	1.5	2.2	0.37	1.60	0.88	0.345
4T-25580/25520	57	50	74	77	3.5	0.8	6.2	0.33	1.79	0.99	0.56
4T-25582/25520	60	50	74	77	5	0.8	6.2	0.33	1.79	0.99	0.556
4T-3578/3520	57	51	74	80	3.5	3.3	10.0	0.31	1.96	1.08	0.699
4T-355/354A	54	50	77	80	2.3	1.3	5.1	0.31	1.96	1.08	0.511
4T-3578/3525	57	51	75	81	3.5	3.3	10.0	0.31	1.96	1.08	0.779
4T-HM803149/HM803110	62	53	74	85	3.5	3.3	4.6	0.55	1.10	0.60	0.849
4T-3782/3720	58	52	82	88	3.5	3.3	8.3	0.34	1.77	0.97	0.961
4T-46175/46368	55	54	79	87	0.8	3.3	7.1	0.40	1.49	0.82	1.04
4T-33885/33821	53	53	85	90	0.8	2.3	8.0	0.33	1.82	1.00	0.987
4T-438/432	57	51	83	87	3.5	2.3	9.2	0.28	2.11	1.16	0.953
4T-HM804842/HM804810	57	57	81	91	0.8	3.3	3.7	0.55	1.10	0.60	1.04
4T-53177/53375	63	53	81	89	3.5	0.8	0.5	0.74	0.81	0.45	0.925
4T-HM903249/HM903210	65	54	81	91	3.5	0.8	– 0.4[1)]	0.74	0.81	0.45	1
4T-527/522	59	53	89	95	3.5	3.3	12.9	0.29	2.10	1.16	1.37
4T-460/453X	60	54	92	98	3.5	3.3	7.1	0.34	1.79	0.98	1.29

1) " – " means that load center at outside on end of inner ring.

Inch series

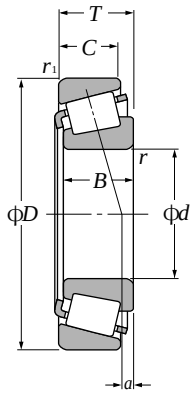

d 44.450～47.625mm

Boundary dimensions mm					Basic load ratings dynamic kN	static kN	dynamic kgf	static kgf	Limiting speeds min-1	
d	D	T	B	C	Cr	Cor	Cr	Cor	grease	oil
44.450	104.775	30.162	30.958	23.812	130	169	13 200	17 300	3 500	4 700
	104.775	36.512	36.512	28.575	138	189	14 000	19 300	3 600	4 800
	111.125	30.162	26.909	20.638	104	136	10 600	13 900	3 200	4 200
	111.125	30.162	26.909	20.638	104	136	10 600	13 900	3 200	4 200
	127.000	50.800	52.388	41.275	250	320	25 500	33 000	3 200	4 300
44.983	82.931	23.812	25.400	19.050	76.0	98.0	7 750	10 000	4 500	6 000
	93.264	30.162	30.302	23.812	102	134	10 400	13 700	4 000	5 300
45.000	85.000	20.638	21.692	17.462	69.5	79.5	7 100	8 100	4 400	5 800
	88.900	20.638	22.225	16.513	76.5	90.5	7 800	9 250	4 100	5 500
45.237	87.312	30.162	30.886	23.812	94.0	117	9 600	12 000	4 400	5 900
45.242	73.431	19.558	19.812	15.748	54.0	76.0	5 550	7 750	4 800	6 400
	77.788	19.842	19.842	15.080	57.5	73.5	5 850	7 500	4 600	6 200
45.618	82.550	23.812	25.400	19.050	76.0	98.0	7 750	10 000	4 500	6 000
	82.931	23.812	25.400	19.050	76.0	98.0	7 750	10 000	4 500	6 000
	83.058	23.876	25.400	19.114	76.0	98.0	7 750	10 000	4 500	6 000
	85.000	23.812	25.400	19.050	76.0	98.0	7 750	10 000	4 500	6 000
45.987	74.976	18.000	18.000	14.000	51.0	71.0	5 200	7 250	4 700	6 300
46.038	79.375	17.462	17.462	13.495	45.5	56.0	4 600	5 700	4 600	6 200
	82.931	23.812	25.400	19.050	76.0	98.0	7 750	10 000	4 500	6 000
	85.000	20.638	21.692	17.462	69.5	79.5	7 100	8 100	4 400	5 800
	85.000	25.400	25.608	20.638	79.0	104	8 050	10 600	4 400	5 800
	90.119	23.000	21.692	21.808	69.5	79.5	7 100	8 100	4 400	5 800
	93.264	30.162	30.302	23.812	102	134	10 400	13 700	4 000	5 300
	95.250	27.783	29.900	22.225	108	129	11 000	13 200	4 200	5 600
47.625	88.900	20.638	22.225	16.513	76.5	90.5	7 800	9 250	4 100	5 500
	88.900	25.400	25.400	19.050	82.0	101	8 350	10 300	4 200	5 600
	93.264	30.162	30.302	23.812	102	134	10 400	13 700	4 000	5 300
	95.250	30.162	29.370	23.020	109	147	11 100	15 000	4 000	5 300
	96.838	21.000	21.946	15.875	78.0	96.5	7 950	9 850	3 700	5 000
	101.600	34.925	36.068	26.988	135	165	13 800	16 800	3 800	5 000
	104.775	30.162	29.317	24.605	115	148	11 700	15 000	3 500	4 700

Note: 1. Chamfer dimensions on the back face of the inner and outer rings of the bearing are larger than maximum values for installation dimensions r_{as} and r_{1as}.
2. As for the maximum value for inner and outer ring diameters of bearings whose bearing numbers are marked with "†" (inner ring) and "††" (outer ring), the precision class is an integer for class 4 and class 2 bearings only.

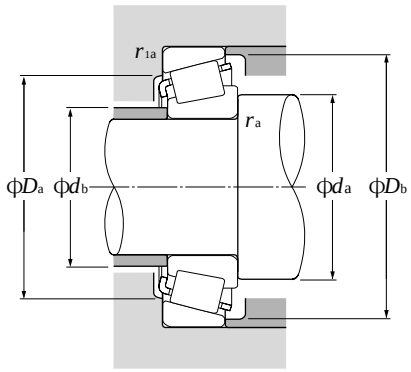

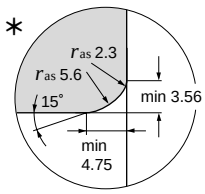

Equivalent radial load

dynamic

$P_r = XF_r + YF_a$

$\frac{F_a}{F_r} \leqq e$		$\frac{F_a}{F_r} > e$	
X	Y	X	Y
1	0	0.4	Y_2

static

$P_{or} = 0.5F_r + Y_oF_a$

When $P_{or} < F_r$ use $P_{or} = F_r$

For values of e, Y_2 and Y_o see the table below.

Bearing numbers	Abutment and fillet dimensions mm						Load center mm	Constant	Axial load factors		Mass kg
	d_a	d_b	D_a	D_b	r_{as} max	r_{1as} max	a	e	Y_2	Y_o	(approx.)
4T-45280/45220	55	54	93	99	0.8	3.3	7.9	0.33	1.80	0.99	1.35
4T-HM807040/HM807010	66	59	89	100	3.5	3.3	7.4	0.49	1.23	0.68	1.62
4T-55175C/55437	70	64	92	105	3.5	3.3	–7.4[1)]	0.88	0.68	0.37	1.45
4T-55176C/55437	65	65	92	105	0.8	3.3	–7.4[1)]	0.88	0.68	0.37	1.09
4T-6277/6220	67	60	108	117	3.5	3.3	19.5	0.30	2.01	1.11	3.58
4T-25584/25520	53	51	74	77	1.5	0.8	6.2	0.33	1.79	0.99	0.555
4T-3776/3720	59	53	82	88	3.5	3.3	8.3	0.34	1.77	0.97	0.952
4T-358/354A	53	50	77	80	1.5	1.3	5.1	0.31	1.96	1.08	0.505
4T-367/362A	55	51	81	84	2	1.3	4.0	0.32	1.88	1.03	0.595
4T-3586/3525	58	52	75	81	3.5	3.3	10.0	0.31	1.96	1.08	0.765
4T-LM102949/LM102910	56	50	68	70	3.5	0.8	4.7	0.31	1.97	1.08	0.307
4T-LM603049/LM603011	57	50	71	74	3.5	0.8	2.2	0.43	1.41	0.77	0.372
4T-25590/25519	58	51	73	77	3.5	2	6.2	0.33	1.79	0.99	0.534
4T-25590/25520	58	51	74	77	3.5	0.8	6.2	0.33	1.79	0.99	0.543
4T-25590/25522	58	51	73	77	3.5	2	6.2	0.33	1.79	0.99	0.545
4T-25590/25526	58	51	74	78	3.5	2.3	6.2	0.33	1.79	0.99	0.581
4T-LM503349A†/LM503310††	57	51	67	71	∗	1.5	1.9	0.40	1.49	0.82	0.296
4T-18690/18620	56	51	71	74	2.8	1.5	2.2	0.37	1.60	0.88	0.329
4T-25592/25520	58	52	74	77	3.5	0.8	6.2	0.33	1.79	0.99	0.538
4T-359A/354A	57	51	77	80	3.5	1.3	5.1	0.31	1.96	1.08	0.489
4T-2984/2924	58	52	76	80	3.5	1.3	6.4	0.35	1.73	0.95	0.615
4T-359S/352	55	51	78	82	2.3	2.3	5.1	0.31	1.96	1.08	0.651
4T-3777/3720	60	53	82	88	3.5	3.3	8.3	0.34	1.77	0.97	0.934
4T-436/432	59	52	83	87	3.5	2.3	9.2	0.28	2.11	1.16	0.927
4T-369A/362A	60	53	81	84	3.5	1.3	4.0	0.32	1.88	1.03	0.559
4T-M804048/M804010	57	56	77	85	0.8	3.3	1.7	0.55	1.10	0.60	0.662
4T-3778/3720	67	55	82	88	6.4	3.3	8.3	0.34	1.77	0.97	0.898
4T-HM804846/HM804810	66	57	81	91	3.5	3.3	3.7	0.55	1.10	0.60	0.978
4T-386A/382A	56	55	89	92	0.8	0.8	3.1	0.35	1.69	0.93	0.72
4T-528/522	62	55	89	95	3.5	3.3	12.9	0.29	2.10	1.16	1.3
4T-463/453X	65	56	92	98	4.8	3.3	7.1	0.34	1.79	0.98	1.24

Note: 3. Chamfer dimensions of bearings marked " ∗ " are shown in drawings.

1） "—" means that load center at outside on end of inner ring.

Inch series
J series

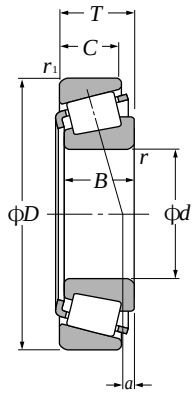

d 47.625～50.800mm

Boundary dimensions					Basic load ratings				Limiting speeds	
					dynamic	static	dynamic	static		
mm					kN		kgf		min^{-1}	
d	D	T	B	C	C_r	C_{or}	C_r	C_{or}	grease	oil
47.625	104.775	30.162	30.958	23.812	130	169	13 200	17 300	3 500	4 700
	111.125	30.162	26.909	20.638	104	136	10 600	13 900	3 200	4 200
	123.825	36.512	32.791	25.400	154	188	15 700	19 200	2 900	3 900
48.412	95.250	30.162	29.370	23.020	109	147	11 100	15 000	4 000	5 300
	95.250	30.162	29.370	23.020	109	147	11 100	15 000	4 000	5 300
49.212	93.264	30.162	30.302	23.812	102	134	10 400	13 700	4 000	5 300
	103.188	43.658	44.475	36.512	174	232	17 700	23 600	3 800	5 000
	104.775	36.512	36.512	28.575	138	189	14 000	19 300	3 600	4 800
	114.300	44.450	44.450	34.925	186	225	19 000	23 000	3 600	4 800
	114.300	44.450	44.450	36.068	203	261	20 700	26 600	3 500	4 700
49.987	82.550	21.590	22.225	16.510	69.5	94.0	7 100	9 600	4 300	5 700
	92.075	24.608	25.400	19.845	83.5	116	8 550	11 800	4 000	5 300
	114.300	44.450	44.450	36.068	203	261	20 700	26 600	3 500	4 700
50.000	82.000	21.500	21.500	17.000	69.5	94.0	7 100	9 600	4 300	5 700
	84.000	22.000	22.000	17.500	69.5	94.5	7 100	9 600	4 300	5 700
	88.900	20.638	22.225	16.513	76.5	90.5	7 800	9 250	4 100	5 500
	88.900	20.638	22.225	16.513	76.5	90.5	7 800	9 250	4 100	5 500
	90.000	28.000	28.000	23.000	106	141	10 800	14 400	4 100	5 400
	105.000	37.000	36.000	29.000	138	189	14 000	19 300	3 600	4 800
	110.000	22.000	21.996	18.824	89.5	120	9 150	12 300	3 200	4 300
50.800	82.550	21.590	22.225	16.510	69.5	94.0	7 100	9 600	4 300	5 700
	85.000	17.462	17.462	13.495	49.5	65.0	5 050	6 600	4 200	5 600
	88.900	17.462	17.462	13.495	49.5	65.0	5 050	6 600	4 200	5 600
	88.900	20.638	22.225	16.513	76.5	90.5	7 800	9 250	4 100	5 500
	88.900	20.638	22.225	16.513	76.5	90.5	7 800	9 250	4 100	5 500
	90.000	20.000	22.225	15.875	76.5	90.5	7 800	9 250	4 100	5 500
	92.075	24.608	25.400	19.845	83.5	116	8 550	11 800	4 000	5 300
	93.264	30.162	30.302	23.812	102	134	10 400	13 700	4 000	5 300
	93.264	30.162	30.302	23.812	102	134	10 400	13 700	4 000	5 300
	95.250	27.783	28.575	22.225	107	139	10 900	14 200	3 900	5 200
	95.250	30.162	30.302	23.812	102	134	10 400	13 700	4 000	5 300
	96.838	21.000	21.946	15.875	78.0	96.5	7 950	9 850	3 700	5 000
	97.630	24.608	24.608	19.446	88.5	128	9 000	13 000	3 700	4 900
	98.425	30.162	30.302	23.812	102	134	10 400	13 700	4 000	5 300

Note: 1. Chamfer dimensions on the back face of the inner and outer rings of the bearing are larger than maximum values for installation dimensions r_{as} and r_{1as}.
2. As for the maximum value for inner ring bore diameters of bearings whose bearing numbers are marked with "†" (inner ring), the precision class is an integer for class 4 and class 2 bearings only.

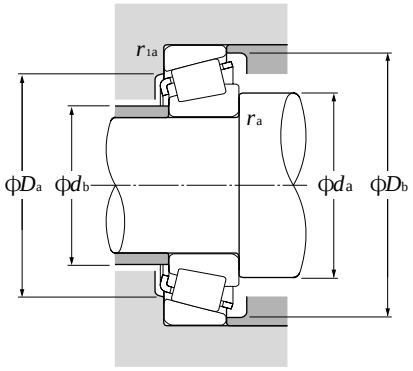

Equivalent radial load
dynamic

$P_r = XF_r + YF_a$

$\frac{F_a}{F_r} \leqq e$		$\frac{F_a}{F_r} > e$	
X	Y	X	Y
1	0	0.4	Y_2

static

$P_{or} = 0.5F_r + Y_oF_a$

When $P_{or} < F_r$ use $P_{or} = F_r$

For values of e, Y_2 and Y_o see the table below.

Bearing numbers	Abutment and fillet dimensions mm						Load center mm	Constant	Axial load factors		Mass kg
	d_a	d_b	D_a	D_b	r_{as} max	r_{1as} max	a	e	Y_2	Y_o	(approx.)
4T-45282/45220	63	57	93	99	3.5	3.3	7.9	0.33	1.80	0.99	1.29
4T-55187C/55437	69	62	92	105	3.5	3.3	–7.4[1)]	0.88	0.68	0.37	1.4
4T-72188C/72487	69	67	102	116	0.8	3.3	–1.5[1)]	0.74	0.81	0.45	2.16
4T-HM804848/HM804810	63	57	81	91	2.3	3.3	3.7	0.55	1.10	0.60	0.967
4T-HM804849/HM804810	66	57	81	91	3.5	3.3	3.7	0.55	1.10	0.60	0.964
4T-3781/3720	62	56	82	88	3.5	3.3	8.3	0.34	1.77	0.97	0.877
4T-5395/5335	66	60	89	97	3.5	3.3	16.1	0.30	2.02	1.11	1.75
4T-HM807044/HM807010	69	63	89	100	3.5	3.3	7.4	0.49	1.23	0.68	1.52
4T-65390/65320	70	60	97	107	3.5	3.3	12.5	0.43	1.39	0.77	2.23
4T-HH506348/HH506310	71	61	97	107	3.5	3.3	13.3	0.40	1.49	0.82	2.33
4T-LM104947A†/LM104911	55	55	75	78	0.5	1.3	5.8	0.31	1.97	1.08	0.434
4T-28579†/28521	60	56	83	87	2.3	0.8	4.6	0.38	1.59	0.87	0.718
4T-HH506349†/HH506310	72	61	97	107	3.5	3.3	13.3	0.40	1.49	0.82	2.27
# 4T-JLM104948/JLM104910	60	55	76	78	3	0.5	5.4	0.31	1.97	1.08	0.42
# 4T-JLM704649/JLM704610	62	56	76	80	3.5	1.5	2.3	0.44	1.37	0.75	0.466
4T-365/362A	58	55	81	84	2	1.3	4.0	0.32	1.88	1.03	0.53
4T-366/362A	59	55	81	84	2.3	1.3	4.0	0.32	1.88	1.03	0.529
# 4T-JM205149/JM205110	62	57	80	85	3	2.5	7.4	0.33	1.82	1.00	0.752
# 4T-JHM807045/JHM807012	69	63	90	100	3	2.5	7.5	0.49	1.23	0.68	1.52
4T-396/394A	61	60	101	104	0.8	1.3	0.7	0.40	1.49	0.82	1.06
4T-LM104949/LM104911	62	55	75	78	3.5	1.3	5.8	0.31	1.97	1.08	0.419
4T-18790/18720	62	56	77	80	3.5	1.5	0.8	0.41	1.48	0.81	0.374
4T-18790/18724	62	56	78	82	3.5	1.3	0.8	0.41	1.48	0.81	0.431
4T-368/362A	58	56	81	84	1.5	1.3	4.0	0.32	1.88	1.03	0.519
4T-370A/362A	65	56	81	84	5	1.3	4.0	0.32	1.88	1.03	0.511
4T-368A/362	62	56	81	84	3.5	2	4.0	0.32	1.88	1.03	0.525
4T-28580/28521	63	57	83	87	3.5	0.8	4.6	0.38	1.59	0.87	0.703
4T-3775/3720	58	58	82	88	0.8	3.3	8.3	0.34	1.77	0.97	0.852
4T-3780/3720	64	58	82	88	3.5	3.3	8.3	0.34	1.77	0.97	0.848
4T-33889/33821	64	58	85	90	3.5	2.3	8.0	0.33	1.82	1.00	0.876
4T-3780/3726	64	58	83	89	3.5	3.3	8.3	0.34	1.77	0.97	0.903
4T-385A/382A	61	60	89	92	2.3	0.8	3.1	0.35	1.69	0.93	0.676
4T-28678/28622	65	58	88	92	3.5	0.8	3.3	0.40	1.49	0.82	0.852
4T-3780/3732	64	58	84	90	3.5	3.3	8.3	0.34	1.77	0.97	0.993

Note: 3. Bearing numbers marked " **#** " designate **J-series** bearings. The tolerances of these bearings is listed in **Table 6.6** on **page A-42**.
1) "—" means that load center at outside on end of inner ring.

Inch series
J series

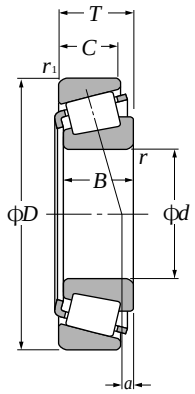

d 50.800 ~ 55.000mm

Boundary dimensions mm					Basic load ratings dynamic kN	static kN	dynamic kgf	static kgf	Limiting speeds min-1	
d	D	T	B	C	Cr	Cor	Cr	Cor	grease	oil
50.800	101.600	31.750	31.750	25.400	110	136	11 200	13 900	3 700	5 000
	101.600	34.925	36.068	26.988	135	165	13 800	16 800	3 800	5 000
	104.775	30.162	29.317	24.605	115	148	11 700	15 000	3 500	4 700
	104.775	30.162	30.958	23.812	130	169	13 200	17 300	3 500	4 700
	104.775	36.512	36.512	28.575	138	189	14 000	19 300	3 600	4 800
	104.775	36.512	36.512	28.575	143	178	14 500	18 100	3 700	4 900
	107.950	36.512	36.957	28.575	141	177	14 400	18 100	3 600	4 800
	111.125	30.162	28.575	20.638	104	136	10 600	13 900	3 200	4 200
	112.712	30.162	26.909	20.638	104	136	10 600	13 900	3 200	4 200
	112.712	30.162	30.048	23.812	119	174	12 200	17 800	3 200	4 300
	112.712	30.162	30.162	23.812	138	195	14 100	19 800	3 200	4 200
	117.475	33.338	31.750	23.812	130	153	13 200	15 600	3 300	4 400
	120.650	41.275	41.275	31.750	172	213	17 500	21 700	3 300	4 400
	123.825	36.512	32.791	25.400	154	188	15 700	19 200	2 900	3 900
	123.825	38.100	36.678	30.162	158	216	16 100	22 000	3 000	4 100
51.592	88.900	20.638	22.225	16.513	76.5	90.5	7 800	9 250	4 100	5 500
52.388	92.075	24.608	25.400	19.845	83.5	116	8 550	11 800	4 000	5 300
	93.264	30.162	30.302	23.812	102	134	10 400	13 700	4 000	5 300
	95.250	27.783	28.575	22.225	107	139	10 900	14 200	3 900	5 200
53.975	88.900	19.050	19.050	13.492	61.0	82.5	6 200	8 450	4 000	5 300
	95.250	27.783	28.575	22.225	107	139	10 900	14 200	3 900	5 200
	96.838	21.000	21.946	15.875	78.0	96.5	7 950	9 850	3 700	5 000
	104.775	30.162	30.958	23.812	130	169	13 200	17 300	3 500	4 700
	104.775	36.512	36.512	28.575	138	189	14 000	19 300	3 600	4 800
	107.950	36.512	36.957	28.575	141	177	14 400	18 100	3 600	4 800
	120.650	41.275	41.275	31.750	172	213	17 500	21 700	3 300	4 400
	122.238	33.338	31.750	23.812	134	163	13 700	16 600	3 100	4 200
	122.238	43.658	43.764	36.512	194	283	19 700	28 900	3 100	4 100
	123.825	36.512	32.791	25.400	154	188	15 700	19 200	2 900	3 900
	123.825	38.100	36.678	30.162	158	216	16 100	22 000	3 000	4 100
	130.175	36.512	33.338	23.812	156	186	15 900	19 000	2 700	3 600
	140.030	36.512	33.236	23.520	171	212	17 400	21 600	2 600	3 400
54.488	104.775	36.512	36.512	28.575	138	189	14 000	19 300	3 600	4 800
55.000	90.000	23.000	23.000	18.500	77.5	109	7 900	11 100	3 900	5 300

Note: 1. With regard to the chamfer dimensions on the back face of the inner and outer rings, installation dimensions r_{as} and r_{1as} are larger than the maximum value.
2. Bearing numbers marked " # " designate **J-series** bearings. The accuracy of these bearings is listed in **Table 6.6** on **page A-42**.

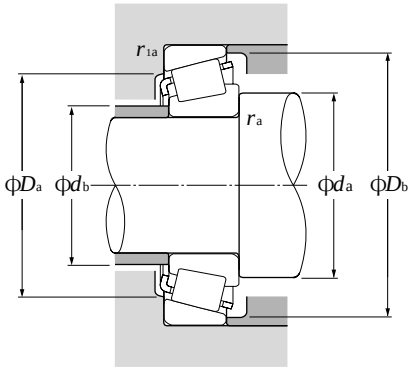

Equivalent radial load
dynamic

$P_r = XF_r + YF_a$

$\frac{F_a}{F_r} \leqq e$		$\frac{F_a}{F_r} > e$	
X	Y	X	Y
1	0	0.4	Y_2

static

$P_{or} = 0.5F_r + Y_oF_a$

When $P_{or} < F_r$ use $P_{or} = F_r$

For values of e, Y_2 and Y_o see the table below.

Bearing numbers	Abutment and fillet dimensions mm						Load center mm	Constant	Axial load factors		Mass kg
	d_a	d_b	D_a	D_b	r_{as} max	r_{1as} max	a	e	Y_2	Y_o	(approx.)
4T-49585/49520	66	59	88	96	3.5	3.3	7.1	0.40	1.50	0.82	1.13
4T-529/522	59	58	89	95	0.8	3.3	12.9	0.29	2.10	1.16	1.24
4T-455/453X	60	59	92	98	0.8	3.3	7.1	0.34	1.79	0.98	1.19
4T-45284/45220	71	59	93	99	6.4	3.3	7.9	0.33	1.80	0.99	1.22
4T-HM807046/HM807010	70	63	89	100	3.5	3.3	7.4	0.49	1.23	0.68	1.49
4T-59200/59412	68	61	92	99	3.5	3.3	9.6	0.40	1.49	0.82	1.44
4T-537/532X	65	59	94	100	3.5	3.3	12.3	0.30	2.02	1.11	1.55
4T-HM907643/HM907614	74	65	91	105	3.5	3.3	–7.2[1)]	0.88	0.68	0.37	1.36
4T-55200C/55443	71	65	92	106	3.5	3.3	–7.4[1)]	0.88	0.68	0.37	1.34
4T-3975/3920	68	61	99	106	3.5	3.3	4.5	0.40	1.49	0.82	1.53
4T-39575/39520	68	61	101	107	3.5	3.3	6.6	0.34	1.77	0.97	1.54
4T-66200/66462	71	65	100	111	3.5	3.3	0.4	0.63	0.96	0.53	1.67
4T-619/612	67	61	105	110	3.5	3.3	14.4	0.31	1.91	1.05	2.3
4T-72200C/72487	77	67	102	116	3.5	3.3	–1.5[1)]	0.74	0.81	0.45	2.1
4T-555/552A	66	62	109	116	2.3	3.3	9.4	0.35	1.73	0.95	2.34
4T-368S/362A	59	56	81	84	2	1.3	4.0	0.32	1.88	1.03	0.507
4T-28584/28521	65	58	83	87	3.5	0.8	4.6	0.38	1.59	0.87	0.677
4T-3767/3720	63	59	82	88	2.3	3.3	8.3	0.34	1.77	0.97	0.819
4T-33890/33821	61	59	85	90	1.5	2.3	8.0	0.33	1.82	1.00	0.851
4T-LM806649/LM806610	63	60	80	85	2.3	2	–2.2[1)]	0.55	1.10	0.60	0.437
4T-33895/33822	63	60	86	90	1.5	0.8	8.0	0.33	1.82	1.00	0.824
4T-389A/382A	61	60	89	92	0.8	0.8	3.1	0.35	1.69	0.93	0.633
4T-45287/45220	62	62	93	99	0.8	3.3	7.9	0.33	1.80	0.99	1.17
4T-HM807049/HM807010	73	63	89	100	3.5	3.3	7.4	0.49	1.23	0.68	1.41
4T-539/532X	68	61	94	100	3.5	3.3	12.3	0.30	2.02	1.11	1.47
4T-621/612	70	63	105	110	3.5	3.3	14.4	0.31	1.91	1.05	2.21
4T-66584/66520	75	68	105	116	3.5	3.3	–1.8[1)]	0.67	0.90	0.50	1.79
4T-5578/5535	73	67	106	116	3.5	3.3	13.3	0.36	1.67	0.92	2.64
4T-72212C/72487	79	67	102	116	3.5	3.3	–1.5[1)]	0.74	0.81	0.45	2.03
4T-557S/552A	71	65	109	116	3.5	3.3	9.4	0.35	1.73	0.95	2.26
4T-HM911242/HM911210	79	74	109	124	3.5	3.3	–5.2[1)]	0.82	0.73	0.40	2.27
4T-78214C/78551	79	77	117	132	0.8	2.3	–8.5[1)]	0.87	0.69	0.38	2.77
4T-HM807048/HM807010	73	63	89	100	3.5	3.3	7.4	0.49	1.23	0.68	1.40
# 4T-JLM506849/JLM506810	63	61	82	86	1.5	0.5	2.8	0.40	1.49	0.82	0.558

1) " — " means that load center at outside on end of inner ring.

Inch series
J series

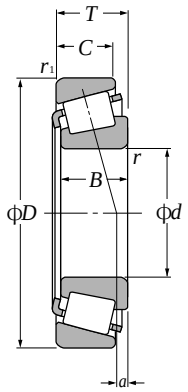

d 55.000～60.000mm

Boundary dimensions					Basic load ratings				Limiting speeds	
					dynamic	static	dynamic	static		
mm					kN		kgf		min^{-1}	
d	D	T	B	C	C_r	C_{or}	C_r	C_{or}	grease	oil
55.000	95.000	29.000	29.000	23.500	107	144	10 900	14 700	3 800	5 100
	96.838	21.000	21.946	15.875	78.0	96.5	7 950	9 850	3 700	5 000
	110.000	39.000	39.000	32.000	173	219	17 600	22 400	3 500	4 600
55.562	97.630	24.608	24.608	19.446	88.5	128	9 000	13 000	3 700	4 900
	123.825	36.512	32.791	25.400	154	188	15 700	19 200	2 900	3 900
	127.000	36.512	36.512	26.988	163	228	16 600	23 300	2 900	3 800
55.575	96.838	21.000	21.946	15.875	78	96.5	7 950	9 850	3 700	5 000
57.150	96.838	21.000	21.946	15.875	78	96.5	7 950	9 850	3 700	5 000
	96.838	21.000	21.946	15.875	78	96.5	7 950	9 850	3 700	5 000
	96.838	21.000	21.946	15.875	78	96.5	7 950	9 850	3 700	5 000
	96.838	21.000	21.946	15.875	78	96.5	7 950	9 850	3 700	5 000
	97.630	24.608	24.608	19.446	88.5	128	9 000	13 000	3 700	4 900
	104.775	30.162	29.317	24.605	115	148	11 700	15 000	3 500	4 700
	104.775	30.162	29.317	24.605	115	148	11 700	15 000	3 500	4 700
	104.775	30.162	30.958	23.812	130	169	13 200	17 300	3 500	4 700
	107.950	27.783	29.317	22.225	115	148	11 700	15 000	3 500	4 700
	110.000	22.000	21.996	18.824	89.5	120	9 150	12 300	3 200	4 300
	110.000	27.795	29.317	27.000	115	148	11 700	15 000	3 500	4 700
	112.712	30.162	30.048	23.812	119	174	12 200	17 800	3 200	4 300
	112.712	30.162	30.162	23.812	138	195	14 100	19 800	3 200	4 200
	112.712	30.162	30.162	23.812	138	195	14 100	19 800	3 200	4 200
	117.475	30.162	30.162	23.812	117	175	11 900	17 900	3 000	4 000
	117.475	33.338	31.750	23.812	130	153	13 200	15 600	3 300	4 400
	120.650	41.275	41.275	31.750	172	213	17 500	21 700	3 300	4 400
	123.825	36.512	32.791	25.400	154	188	15 700	19 200	2 900	3 900
	123.825	38.100	36.678	30.162	158	216	16 100	22 000	3 000	4 100
	140.030	36.512	33.236	23.520	171	212	17 400	21 600	2 600	3 400
57.531	96.838	21.000	21.946	15.875	78.0	96.5	7 950	9 850	3 700	5 000
59.972	122.238	33.338	31.750	23.812	134	163	13 700	16 600	3 100	4 200
59.987	146.050	41.275	39.688	25.400	199	234	20 300	23 900	2 400	3 200
60.000	95.000	24.000	24.000	19.000	83.0	122	8 500	12 400	3 700	4 900
	107.950	25.400	25.400	19.050	91.5	140	9 350	14 200	3 200	4 300

Note: 1. Chamfer dimensions on the back face of the inner and outer rings of the bearing are larger than maximum values for installation dimensions r_{as} and r_{1as}.
2. As for the maximum value for inner ring bore diameters of bearings whose bearing numbers are marked with "†" (inner ring), the precision class is an integer for class 4 and class 2 bearings only.

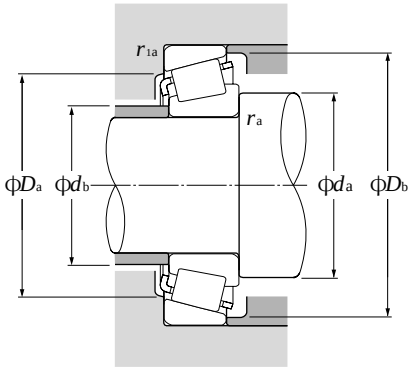

Equivalent radial load
dynamic

$P_r = XF_r + YF_a$

$\frac{F_a}{F_r} \leqq e$		$\frac{F_a}{F_r} > e$	
X	Y	X	Y
1	0	0.4	Y_2

static

$P_{or} = 0.5F_r + Y_oF_a$

When $P_{or} < F_r$ use $P_{or} = F_r$

For values of e, Y_2 and Y_o see the table below.

Bearing numbers	Abutment and fillet dimensions mm						Load center mm	Constant	Axial load factors		Mass kg
	d_a	d_b	D_a	D_b	r_{as} max	r_{1as} max	a	e	Y_2	Y_o	(approx.)
# 4T-JM207049/JM207010	64	62	85	91	1.5	2.5	7.6	0.33	1.79	0.99	0.82
4T-385/382A	65	61	89	92	2.3	0.8	3.1	0.35	1.69	0.93	0.616
# 4T-JH307749/JH307710	71	64	97	104	3	2.5	11.7	0.35	1.73	0.95	1.71
4T-28680/28622	68	62	88	92	3.5	0.8	3.3	0.40	1.49	0.82	0.774
4T-72218C/72487	80	67	102	116	3.5	3.3	–1.5[1)]	0.74	0.81	0.45	1.99
4T-HM813840/HM813810	76	70	111	121	3.5	3.3	3.7	0.50	1.20	0.66	2.34
4T-389/382A	65	61	89	92	2.3	0.8	3.1	0.35	1.69	0.93	0.608
4T-387/382A	66	62	89	92	2.3	0.8	3.1	0.35	1.69	0.93	0.583
4T-387A/382A	69	62	89	92	3.5	0.8	3.1	0.35	1.69	0.93	0.581
4T-387AS/382A	72	62	89	92	5	0.8	3.1	0.35	1.69	0.93	0.576
4T-387S/382A	63	62	89	92	0.8	0.8	3.1	0.35	1.69	0.93	0.585
4T-28682/28622	70	63	88	92	3.5	0.8	3.3	0.40	1.49	0.82	0.747
4T-462/453X	67	63	92	98	2.3	3.3	7.1	0.34	1.79	0.98	1.06
4T-469/453X	70	63	92	98	3.5	3.3	7.1	0.34	1.79	0.98	1.06
4T-45289/45220	65	65	93	99	0.8	3.3	7.9	0.33	1.80	0.99	1.1
4T-469/453A	70	63	97	100	3.5	0.8	7.1	0.34	1.79	0.98	1.11
4T-390/394A	70	66	101	104	2.3	1.3	0.7	0.40	1.49	0.82	0.954
4T-469/454	70	63	96	100	3.5	2	7.1	0.34	1.79	0.98	1.24
4T-3979/3920	72	66	99	106	3.5	3.3	4.5	0.40	1.49	0.82	1.4
4T-39580/39520	72	66	101	107	3.5	3.3	6.6	0.34	1.77	0.97	1.41
4T-39581/39520	81	66	101	107	8	3.3	6.6	0.34	1.77	0.97	1.4
4T-33225/33462	74	68	104	112	3.5	3.3	2.6	0.44	1.38	0.76	1.58
4T-66225/66462	76	69	100	111	3.5	3.3	0.4	0.63	0.96	0.53	1.54
4T-623/612	72	66	105	110	3.5	3.3	14.4	0.31	1.91	1.05	2.12
4T-72225C/72487	81	67	102	116	3.5	3.3	–1.5[1)]	0.74	0.81	0.45	1.96
4T-555S/552A	73	67	109	116	3.5	3.3	9.4	0.35	1.73	0.95	2.18
4T-78225/78551	83	77	117	132	3.5	2.3	–8.5[1)]	0.87	0.69	0.38	2.69
4T-388A/382A	69	63	89	92	3.5	0.8	3.1	0.35	1.69	0.93	0.575
4T-66589/66520	74	73	105	116	0.8	3.3	–1.8[1)]	0.67	0.90	0.50	1.66
4T-H913840†/H913810	88	82	124	138	3.5	3.3	–4.3[1)]	0.78	0.77	0.42	3.22
# 4T-JLM508748/JLM508710	75	66	85	91	5	2.5	3.0	0.40	1.49	0.82	0.606
4T-29580/29520	75	68	96	103	3.5	3.3	0.6	0.46	1.31	0.72	0.992

Note: 3. Bearing numbers marked " # " designate **J-series** bearings. The tolerances of these bearings is listed in **Table 6.6** on **page A-42**.
1) "—" means that load center at outside on end of inner ring.

Inch series
J series

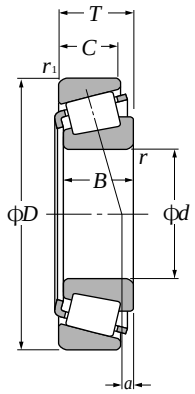

d 60.000 ~ 65.000mm

Boundary dimensions mm					Basic load ratings dynamic kN	static kN	dynamic kgf	static kgf	Limiting speeds min-1	
d	D	T	B	C	Cr	Cor	Cr	Cor	grease	oil
60.000	110.000	22.000	21.996	18.824	89.5	120	9 150	12 300	3 200	4 300
	130.000	34.100	30.924	22.650	156.0	186	15 900	19 000	2 700	3 600
60.325	100.000	25.400	25.400	19.845	90.5	134	9 200	13 600	3 500	4 700
	112.712	30.162	30.048	23.812	119	174	12 200	17 800	3 200	4 300
	122.238	38.100	38.354	29.718	187	244	19 100	24 900	3 100	4 100
	122.238	43.658	43.764	36.512	194	283	19 700	28 900	3 100	4 100
	123.825	38.100	36.678	30.162	158	216	16 100	22 000	3 000	4 100
	127.000	36.512	36.512	26.988	163	228	16 600	23 300	2 900	3 800
	127.000	44.450	44.450	34.925	203	263	20 700	26 800	3 100	4 200
	130.175	36.512	33.338	23.812	156	186	15 900	19 000	2 700	3 600
61.912	110.000	22.000	21.996	18.824	89.5	120	9 150	12 300	3 200	4 300
	136.525	46.038	46.038	36.512	224	355	22 800	36 500	2 600	3 500
	146.050	41.275	39.688	25.400	199	234	20 300	23 900	2 400	3 200
61.976	101.600	24.608	24.608	19.845	90.5	134	9 200	13 600	3 500	4 700
62.738	101.600	25.400	25.400	19.845	90.5	134	9 200	13 600	3 500	4 700
63.500	94.458	19.050	19.050	15.083	60.5	103	6 150	10 500	3 600	4 800
	107.950	25.400	25.400	19.050	91.5	140	9 350	14 200	3 200	4 300
	107.950	25.400	25.400	19.050	91.5	140	9 350	14 200	3 200	4 300
	110.000	22.000	21.996	18.824	89.5	120	9 150	12 300	3 200	4 300
	110.000	25.400	25.400	19.050	91.5	140	9 350	14 200	3 200	4 300
	112.712	30.162	30.048	23.812	119	174	12 200	17 800	3 200	4 300
	112.712	30.162	30.162	23.812	138	195	14 100	19 800	3 200	4 200
	120.000	29.794	29.007	24.237	128	177	13 000	18 100	3 000	4 000
	120.000	29.794	29.007	24.237	128	177	13 000	18 100	3 000	4 000
	122.238	38.100	38.354	29.718	187	244	19 100	24 900	3 100	4 100
	122.238	43.658	43.764	36.512	194	283	19 700	28 900	3 100	4 100
	123.825	38.100	36.678	30.162	158	216	16 100	22 000	3 000	4 100
	127.000	36.512	36.170	28.575	163	229	16 600	23 300	2 900	3 800
	127.000	36.512	36.512	26.988	163	228	16 600	23 300	2 900	3 800
	136.525	41.275	41.275	31.750	194	262	19 800	26 700	2 800	3 800
	140.030	36.512	33.236	23.520	171	212	17 400	21 600	2 600	3 400
65.000	105.000	24.000	23.000	18.500	85.0	117	8 700	11 900	3 300	4 500
	110.000	28.000	28.000	22.500	119	174	12 200	17 800	3 200	4 300

Note: 1. Chamfer dimensions on the back face of the inner and outer rings of the bearing are larger than maximum values for installation dimensions r_{as} and r_{1as}.
2. Bearing numbers marked " # " designate **J-series** bearings. The accuracy of these bearings is listed in **Table 6.6** on **page A-42**.

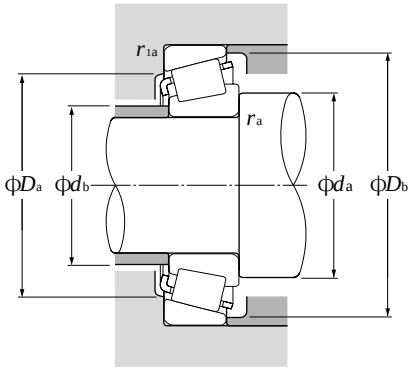

Equivalent radial load

dynamic

$P_r = XF_r + YF_a$

$\frac{F_a}{F_r} \leqq e$		$\frac{F_a}{F_r} > e$	
X	Y	X	Y
1	0	0.4	Y_2

static

$P_{or} = 0.5F_r + Y_oF_a$

When $P_{or} < F_r$ use $P_{or} = F_r$

For values of e, Y_2 and Y_o see the table below.

Bearing numbers	Abutment and fillet dimensions mm						Load center mm	Constant	Axial load factors		Mass kg
	d_a	d_b	D_a	D_b	r_{as} max	r_{1as} max	a	e	Y_2	Y_o	(approx.)
4T-397/394A	69	68	101	104	0.8	1.3	0.7	0.40	1.49	0.82	0.91
# 4T-JHM911244/JHM911211	84	74	109	123	3.5	3.3	–7.6[1)]	0.82	0.73	0.40	2.01
4T-28985/28921	73	67	89	96	3.5	3.3	2.5	0.43	1.41	0.78	0.772
4T-3980/3920	75	68	99	106	3.5	3.3	4.5	0.40	1.49	0.82	1.33
4T-HM212044/HM212011	85	70	108	116	8	3.3	11.1	0.34	1.78	0.98	2.02
4T-5583/5535	78	72	106	116	3.5	3.3	13.3	0.36	1.67	0.92	2.44
4T-558/552A	73	69	109	116	2.3	3.3	9.4	0.35	1.73	0.95	2.1
4T-HM813841/HM813810	80	73	111	121	3.5	3.3	3.7	0.50	1.20	0.66	2.21
4T-65237/65500	82	71	107	119	3.5	3.3	9.3	0.49	1.23	0.68	2.65
4T-HM911245/HM911210	87	74	109	124	5	3.3	–5.2[1)]	0.82	0.73	0.40	2.12
4T-392/394A	70	69	101	104	0.8	1.3	0.7	0.40	1.49	0.82	0.879
4T-H715334/H715311	86	79	118	132	3.5	3.3	8.7	0.47	1.27	0.70	3.47
4T-H913842/H913810	90	82	124	138	3.5	3.3	–4.3[1)]	0.78	0.77	0.42	3.17
4T-28990/28920	72	68	90	97	2	3.3	1.7	0.43	1.41	0.78	0.768
4T-28995/28920	75	69	90	97	3.5	3.3	2.5	0.43	1.41	0.78	0.764
4T-L610549/L610510	71	69	86	91	1.5	1.5	–0.6[1)]	0.42	1.41	0.78	0.449
4T-29585/29520	77	71	96	103	3.5	3.3	0.6	0.46	1.31	0.72	0.924
4T-29586/29520	73	71	96	103	1.5	3.3	0.6	0.46	1.31	0.72	0.929
4T-390A/394A	73	70	101	104	1.5	1.3	0.7	0.40	1.49	0.82	0.851
4T-29585/29521	77	71	99	104	3.5	1.3	0.6	0.46	1.31	0.72	0.982
4T-3982/3920	77	71	99	106	3.5	3.3	4.5	0.40	1.49	0.82	1.26
4T-39585/39520	77	71	101	107	3.5	3.3	6.6	0.34	1.77	0.97	1.27
4T-477/472	73	72	107	114	0.8	2	3.9	0.38	1.56	0.86	1.49
4T-483/472	78	72	107	114	3.5	2	3.9	0.38	1.56	0.86	1.48
4T-HM212046/HM212011	80	73	108	116	3.5	3.3	11.1	0.34	1.78	0.98	1.95
4T-5584/5535	81	75	106	116	3.5	3.3	13.3	0.36	1.67	0.92	2.34
4T-559/552A	78	72	109	116	3.5	3.3	9.4	0.35	1.73	0.95	2.01
4T-565/563	80	73	112	120	3.5	3.3	8.3	0.36	1.65	0.91	2.11
4T-HM813842/HM813810	82	76	111	121	3.5	3.3	3.7	0.50	1.20	0.66	2.12
4T-639/632	81	74	118	125	3.5	3.3	11.4	0.36	1.66	0.91	2.85
4T-78250/78551	85	79	117	132	2.3	2.3	–8.5[1)]	0.87	0.69	0.38	2.54
# 4T-JLM710949/JLM710910	77	71	96	101	3	1	0.3	0.45	1.32	0.73	0.742
# 4T-JM511946/JM511910	78	72	99	105	3	2.5	3.4	0.40	1.49	0.82	1.08

1) "—" means that load center at outside on end of inner ring.

Inch series
J series

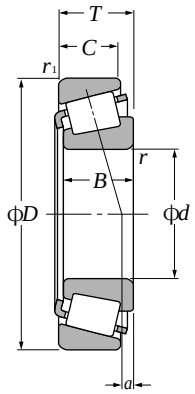

d 65.000 ~ 70.000mm

Boundary dimensions					Basic load ratings				Limiting speeds	
					dynamic	static	dynamic	static		
mm					kN		kgf		min^{-1}	
d	D	T	B	C	C_r	C_{or}	C_r	C_{or}	grease	oil
65.000	120.000	39.000	38.500	32.000	185	248	18 800	25 300	3 100	4 100
65.088	135.755	53.975	56.007	44.450	278	380	28 300	38 500	2 900	3 800
66.675	103.213	17.602	17.602	11.989	60.0	78.0	6 100	8 000	3 300	4 400
	107.950	25.400	25.400	19.050	91.5	140	9 350	14 200	3 200	4 300
	110.000	22.000	21.996	18.824	89.5	120	9 150	12 300	3 200	4 300
	112.712	30.162	30.048	23.812	119	174	12 200	17 800	3 200	4 300
	112.712	30.162	30.048	23.812	119	174	12 200	17 800	3 200	4 300
	112.712	30.162	30.162	23.812	138	195	14 100	19 800	3 200	4 200
	122.238	38.100	38.354	29.718	187	244	19 100	24 900	3 100	4 100
	123.825	38.100	36.678	30.162	158	216	16 100	22 000	3 000	4 100
	127.000	36.512	36.512	26.988	163	228	16 600	23 300	2 900	3 800
	130.175	41.275	41.275	31.750	194	262	19 800	26 700	2 800	3 800
	135.755	53.975	56.007	44.450	278	380	28 300	38 500	2 900	3 800
	136.525	41.275	41.275	31.750	194	262	19 800	26 700	2 800	3 800
	136.525	41.275	41.275	31.750	226	293	23 100	29 900	2 700	3 700
68.262	110.000	22.000	21.996	18.824	89.5	120	9 150	12 300	3 200	4 300
	120.000	29.794	29.007	24.237	128	177	13 000	18 100	3 000	4 000
	123.825	38.100	36.678	30.162	158	216	16 100	22 000	3 000	4 100
	136.525	41.275	41.275	31.750	226	293	23 100	29 900	2 700	3 700
	136.525	46.038	46.038	36.512	224	355	22 800	36 500	2 600	3 500
69.850	112.712	25.400	25.400	19.050	95.5	151	9 750	15 400	3 100	4 100
	117.475	30.162	30.162	23.812	117	175	11 900	17 900	3 000	4 000
	120.000	29.794	29.007	24.237	128	177	13 000	18 100	3 000	4 000
	120.000	32.545	32.545	26.195	147	214	15 000	21 800	3 000	4 000
	120.650	25.400	25.400	19.050	95.5	151	9 750	15 400	3 100	4 100
	127.000	36.512	36.170	28.575	163	229	16 600	23 300	2 900	3 800
	136.525	41.275	41.275	31.750	194	262	19 800	26 700	2 800	3 800
	146.050	41.275	41.275	31.750	206	295	21 000	30 000	2 500	3 300
	150.089	44.450	46.672	36.512	261	360	26 600	37 000	2 400	3 200
	168.275	53.975	56.363	41.275	340	460	34 500	46 500	2 200	3 000
69.952	121.442	24.608	23.012	17.462	91.0	127	9 300	13 000	2 900	3 800
70.000	110.000	26.000	25.000	20.500	97.0	150	9 900	15 300	3 200	4 200
	115.000	29.000	29.000	23.000	124	171	12 700	17 500	3 100	4 100

Note: 1. Chamfer dimensions on the back face of the inner and outer rings of the bearing are larger than maximum values for installation dimensions r_{as} and r_{1as}.
2. Bearing numbers marked " # " designate **J-series** bearings. The accuracy of these bearings is listed in **Table 6.6** on **page A-42**.

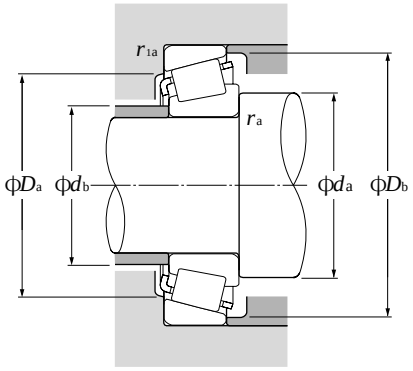

Equivalent radial load
dynamic

$P_r = XF_r + YF_a$

$\frac{F_a}{F_r} \leqq e$		$\frac{F_a}{F_r} > e$	
X	Y	X	Y
1	0	0.4	Y_2

static

$P_{or} = 0.5F_r + Y_oF_a$

When $P_{or} < F_r$ use $P_{or} = F_r$

For values of e, Y_2 and Y_o see the table below.

Bearing numbers	Abutment and fillet dimensions mm						Load center mm	Constant	Axial load factors		Mass kg
	d_a	d_b	D_a	D_b	r_{as} max	r_{1as} max	a	e	Y_2	Y_o	(approx.)
# 4T-JH211749/JH211710	80	74	107	114	3	2.5	10.9	0.34	1.78	0.98	1.90
4T-6379/6320	84	77	117	126	3.5	3.3	18.8	0.32	1.85	1.02	3.71
4T-L812148/L812111	74	72	96	99	1.5	0.8	–3.7[1)]	0.49	1.23	0.68	0.48
4T-29590/29520	80	73	96	103	3.5	3.3	0.6	0.46	1.31	0.72	0.86
4T-395A/394A	73	73	101	104	0.8	1.3	0.7	0.40	1.49	0.82	0.796
4T-3984/3925	80	74	101	106	3.5	0.8	4.5	0.40	1.49	0.82	1.19
4T-3994/3920	84	74	99	106	5.5	3.3	4.5	0.40	1.49	0.82	1.18
4T-39590/39520	80	74	101	107	3.5	3.3	6.6	0.34	1.77	0.97	1.19
4T-HM212049/HM212010	82	75	110	116	3.5	1.5	11.1	0.34	1.78	0.98	1.86
4T-560/552A	81	75	109	116	3.5	3.3	9.4	0.35	1.73	0.95	1.92
4T-HM813844/HM813810	85	78	111	121	3.5	3.3	3.7	0.50	1.20	0.66	2.03
4T-641/633	83	77	116	124	3.5	3.3	11.4	0.36	1.66	0.91	2.41
4T-6386/6320	87	77	117	126	4.3	3.3	18.8	0.32	1.85	1.02	3.64
4T-641/632	83	77	118	125	3.5	3.3	11.4	0.36	1.66	0.91	2.74
4T-H414242/H414210	85	81	121	129	3.5	3.3	11.0	0.36	1.67	0.92	2.75
4T-399A/394A	78	74	101	104	2.3	1.3	0.7	0.40	1.49	0.82	0.764
4T-480/472	82	75	107	114	3.5	2	3.9	0.38	1.56	0.86	1.37
4T-560S/552A	83	76	109	116	3.5	3.3	9.4	0.35	1.73	0.95	1.87
4T-H414245/H414210	86	82	121	129	3.5	3.3	11.0	0.36	1.67	0.92	2.7
4T-H715343/H715311	90	84	118	132	3.5	3.3	8.7	0.47	1.27	0.70	3.24
4T-29675/29620	80	77	101	109	1.5	3.3	–0.9[1)]	0.49	1.23	0.68	0.949
4T-33275/33462	84	77	104	112	3.5	3.3	2.6	0.44	1.38	0.76	1.28
4T-482/472	83	77	107	114	3.5	2	3.9	0.38	1.56	0.86	1.33
4T-47487/47420	84	78	107	114	3.5	3.3	6.1	0.36	1.67	0.92	1.47
4T-29675/29630	80	77	104	113	1.5	3.3	–0.9[1)]	0.49	1.23	0.68	1.17
4T-566/563	85	78	112	120	3.5	3.3	8.3	0.36	1.65	0.91	1.92
4T-643/632	86	80	118	125	3.5	3.3	11.4	0.36	1.66	0.91	2.63
4T-655/653	88	82	131	139	3.5	3.3	8.0	0.41	1.47	0.81	3.28
4T-745A/742	88	82	134	142	3.5	3.3	12.0	0.33	1.84	1.01	3.92
4T-835/832	91	84	149	155	3.5	3.3	18.5	0.30	2.00	1.10	6.13
4T-34274/34478	81	78	110	116	2	2	–1.2[1)]	0.45	1.33	0.73	1.11
# 4T-JLM813049/JLM813010	78	77	98	105	1	2.5	–0.3[1)]	0.49	1.23	0.68	0.889
# 4T-JM612949/JM612910	83	77	103	110	3	2.5	2.5	0.43	1.39	0.77	1.13

1) "—" means that load center at outside on end of inner ring.

Inch series
J series

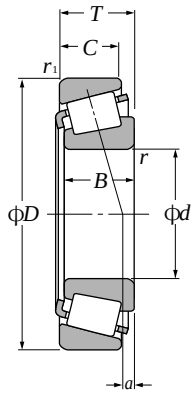

d 70.000 ~ 76.200mm

Boundary dimensions					Basic load ratings				Limiting speeds	
					dynamic	static	dynamic	static		
mm					kN		kgf		min^{-1}	
d	D	T	B	C	C_r	C_{or}	C_r	C_{or}	grease	oil
70.000	120.000	29.794	29.007	24.237	128	177	13 000	18 100	3 000	4 000
	150.000	41.275	39.688	25.400	199	234	20 300	23 900	2 400	3 200
71.438	117.475	30.162	30.162	23.812	117	175	11 900	17 900	3 000	4 000
	120.000	32.545	32.545	26.195	147	214	15 000	21 800	3 000	4 000
	127.000	36.512	36.170	28.575	163	229	16 600	23 300	2 900	3 800
	136.525	41.275	41.275	31.750	194	262	19 800	26 700	2 800	3 800
	136.525	41.275	41.275	31.750	226	293	23 100	29 900	2 700	3 700
	136.525	46.038	46.038	36.512	224	355	22 800	36 500	2 600	3 500
73.025	112.712	25.400	25.400	19.050	95.5	151	9 750	15 400	3 100	4 100
	117.475	30.162	30.162	23.812	117	175	11 900	17 900	3 000	4 000
	127.000	36.512	36.170	28.575	163	229	16 600	23 300	2 900	3 800
	139.992	36.512	36.098	28.575	178	265	18 100	27 100	2 600	3 400
	149.225	53.975	54.229	44.450	287	410	29 300	41 500	2 500	3 400
	150.089	44.450	46.672	36.512	261	360	26 600	37 000	2 400	3 200
73.817	112.712	25.400	25.400	19.050	95.5	151	9 750	15 400	3 100	4 100
	127.000	36.512	36.170	28.575	163	229	16 600	23 300	2 900	3 800
74.612	139.992	36.512	36.098	28.575	178	265	18 100	27 100	2 600	3 400
75.000	115.000	25.000	25.000	19.000	94.5	143	9 650	14 600	3 000	4 000
	120.000	31.000	29.500	25.000	131	197	13 300	20 100	2 900	3 900
	145.000	51.000	51.000	42.000	287	410	29 300	41 500	2 500	3 400
76.200	109.538	19.050	19.050	15.083	63.0	115	6 450	11 700	3 100	4 100
	121.442	24.608	23.012	17.462	91.0	127	9 300	13 000	2 900	3 800
	121.442	24.608	23.012	17.462	91.0	127	9 300	13 000	2 900	3 800
	127.000	30.162	31.000	22.225	135	194	13 800	19 800	2 800	3 700
	133.350	33.338	33.338	26.195	153	235	15 600	24 000	2 600	3 500
	133.350	39.688	39.688	32.545	177	305	18 000	31 000	2 600	3 500
	135.733	44.450	46.100	34.925	211	330	21 600	34 000	2 700	3 500
	136.525	30.162	29.769	22.225	129	189	13 200	19 300	2 600	3 500
	139.992	36.512	36.098	28.575	178	265	18 100	27 100	2 600	3 400
	139.992	36.512	36.098	28.575	178	265	18 100	27 100	2 600	3 400
	146.050	41.275	41.275	31.750	206	295	21 000	30 000	2 500	3 300
	149.225	53.975	54.229	44.450	287	410	29 300	41 500	2 500	3 400
	150.089	44.450	46.672	36.512	261	360	26 600	37 000	2 400	3 200

Note: 1. Chamfer dimensions on the back face of the inner and outer rings of the bearing are larger than maximum values for installation dimensions r_{as} and r_{1as}.
2. Bearing numbers marked " # " designate **J-series** bearings. The accuracy of these bearings is listed in **Table 6.6** on **page A-42**.

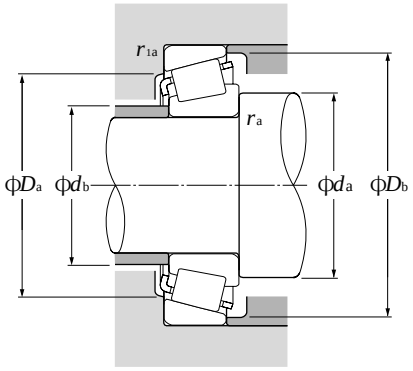

Equivalent radial load
dynamic
$P_r = XF_r + YF_a$

$\frac{F_a}{F_r} \leqq e$		$\frac{F_a}{F_r} > e$	
X	Y	X	Y
1	0	0.4	Y_2

static
$P_{or} = 0.5F_r + Y_oF_a$
When $P_{or} < F_r$ use $P_{or} = F_r$
For values of e, Y_2 and Y_o see the table below.

Bearing numbers	Abutment and fillet dimensions mm						Load center mm	Constant	Axial load factors		Mass kg
	d_a	d_b	D_a	D_b	r_{as} max	r_{1as} max	a	e	Y_2	Y_o	(approx.)
4T-484/472	80	77	107	114	2	2	3.9	0.38	1.56	0.86	1.33
# 4T-JH913848/JH913811	92	82	126	146	2	3.3	–4.3[1)]	0.78	0.77	0.42	3.08
4T-33281/33462	85	79	104	112	3.5	3.3	2.6	0.44	1.38	0.76	1.24
4T-47490/47420	86	79	107	114	3.5	3.3	6.1	0.36	1.67	0.92	1.42
4T-567A/563	86	80	112	120	3.5	3.3	8.3	0.36	1.65	0.91	1.87
4T-644/632	87	81	118	125	3.5	3.3	11.4	0.36	1.66	0.91	2.57
4T-H414249/H414210	89	83	121	129	3.5	3.3	11.0	0.36	1.67	0.92	2.58
4T-H715345/H715311	93	87	118	132	3.5	3.3	8.7	0.47	1.27	0.70	3.11
4T-29685/29620	86	80	101	109	3.5	3.3	–0.9[1)]	0.49	1.23	0.68	0.873
4T-33287/33462	87	80	104	112	3.5	3.3	2.6	0.44	1.38	0.76	1.19
4T-567/563	88	81	112	120	3.5	3.3	8.3	0.36	1.65	0.91	1.82
4T-576/572	90	83	125	133	3.5	3.3	5.5	0.40	1.49	0.82	2.53
4T-6460/6420	93	87	129	140	3.5	3.3	14.8	0.36	1.66	0.91	4.42
4T-744/742	91	85	134	142	3.5	3.3	12.0	0.33	1.84	1.01	3.79
4T-29688/29620	83	80	101	109	1.5	3.3	–0.9[1)]	0.49	1.23	0.68	0.86
4T-568/563	83	82	112	120	0.8	3.3	8.3	0.36	1.65	0.91	1.80
4T-577/572	91	85	125	133	3.5	3.3	5.5	0.40	1.49	0.82	2.48
# 4T-JLM714149/JLM714110	87	81	104	110	3	2.5	–0.3[1)]	0.46	1.31	0.72	0.875
# 4T-JM714249/JM714210	88	83	108	115	3	2.5	1.9	0.44	1.35	0.74	1.29
# 4T-JH415647/JH415610	94	89	129	139	3	2.5	14.1	0.36	1.66	0.91	3.81
4T-L814749/L814710	84	82	100	105	1.5	1.5	–5.0[1)]	0.50	1.20	0.66	0.579
4T-34300/34478	86	83	110	116	2	2	–1.2[1)]	0.45	1.33	0.73	0.982
4T-34301/34478	89	83	110	116	3.5	2	–1.2[1)]	0.45	1.33	0.73	0.977
4T-42687/42620	90	84	114	121	3.5	3.3	2.8	0.42	1.43	0.79	1.46
4T-47678/47620	97	85	119	128	6.4	3.3	3.9	0.40	1.48	0.82	1.92
4T-HM516442/HM516410	93	87	118	128	3.5	3.3	7.5	0.40	1.49	0.82	2.43
4T-5760/5735	94	88	119	130	3.5	3.3	11.0	0.41	1.48	0.81	2.75
4T-495A/493	92	86	122	130	3.5	3.3	0.7	0.44	1.35	0.74	1.83
4T-575/572	92	86	125	133	3.5	3.3	5.5	0.40	1.49	0.82	2.43
4T-575S/572	99	86	125	133	6.8	3.3	5.5	0.40	1.49	0.82	2.41
4T-659/653	93	87	131	139	3.5	3.3	8.0	0.41	1.47	0.81	3.04
4T-6461A/6420	108	89	129	140	9.7	3.3	14.8	0.36	1.66	0.91	4.23
4T-748S/742	93	87	134	142	3.5	3.3	12.0	0.33	1.84	1.01	3.66

1) "—" means that load center at outside on end of inner ring.

Inch series
J series

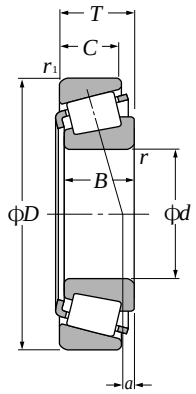

d 76.200～83.345mm

Boundary dimensions					Basic load ratings				Limiting speeds	
					dynamic	static	dynamic	static		
mm					kN		kgf		min^{-1}	
d	D	T	B	C	C_r	C_{or}	C_r	C_{or}	grease	oil
76.200	149.225	53.975	54.229	44.450	287	410	29 300	41 500	2 500	3 400
	161.925	53.975	55.100	42.862	310	460	31 500	47 000	2 300	3 000
	180.975	53.975	53.183	35.720	325	415	33 000	42 500	1 900	2 600
	190.500	57.150	57.531	46.038	445	610	45 000	62 000	1 900	2 600
77.788	117.475	25.400	25.400	19.050	99.5	162	10 200	16 500	2 900	3 900
	121.442	24.608	23.012	17.462	91.0	127	9 300	13 000	2 900	3 800
	127.000	30.162	31.000	22.225	135	194	13 800	19 800	2 800	3 700
	136.525	30.162	29.769	22.225	129	189	13 200	19 300	2 600	3 500
	136.525	46.038	46.038	36.512	224	355	22 800	36 500	2 600	3 500
79.375	146.050	41.275	41.275	31.750	206	295	21 000	30 000	2 500	3 300
	161.925	47.625	48.260	38.100	270	385	27 500	39 000	2 300	3 100
	190.500	57.150	57.531	46.038	445	610	45 000	62 000	1 900	2 600
80.000	130.000	35.000	34.000	28.500	166	249	16 900	25 400	2 700	3 600
80.962	133.350	33.338	33.338	26.195	153	235	15 600	24 000	2 600	3 500
	136.525	30.162	29.769	22.225	129	189	13 200	19 300	2 600	3 500
	139.992	36.512	36.098	28.575	178	265	18 100	27 100	2 600	3 400
	150.089	44.450	46.672	36.512	261	360	26 600	37 000	2 400	3 200
82.550	125.412	25.400	25.400	19.845	102	163	10 400	16 600	2 700	3 600
	133.350	33.338	33.338	26.195	153	235	15 600	24 000	2 600	3 500
	133.350	39.688	39.688	32.545	177	305	18 000	31 000	2 600	3 500
	136.525	30.162	29.769	22.225	129	189	13 200	19 300	2 600	3 500
	139.992	36.512	36.098	28.575	178	265	18 100	27 100	2 600	3 400
	139.992	36.512	36.098	28.575	178	265	18 100	27 100	2 600	3 400
	146.050	41.275	41.275	31.750	206	295	21 000	30 000	2 500	3 300
	150.089	44.450	46.672	36.512	261	360	26 600	37 000	2 400	3 200
	152.400	39.688	36.322	30.162	180	279	18 300	28 400	2 300	3 100
	152.400	41.275	41.275	31.750	206	295	21 000	30 000	2 500	3 300
	161.925	47.625	48.260	38.100	270	385	27 500	39 000	2 300	3 100
	161.925	53.975	55.100	42.862	310	460	31 500	47 000	2 300	3 000
	168.275	53.975	56.363	41.275	340	460	34 500	46 500	2 200	3 000
83.345	125.412	25.400	25.400	19.845	102	163	10 400	16 600	2 700	3 600
	125.412	25.400	25.400	19.845	102	163	10 400	16 600	2 700	3 600
	125.412	25.400	25.400	19.845	102	163	10 400	16 600	2 700	3 600

Note: 1. Chamfer dimensions on the back face of the inner and outer rings of the bearing are larger than maximum values for installation dimensions r_{as} and r_{1as}.
2. As for the maximum value for inner and outer ring diameters of bearings whose bearing numbers are marked with "†" (inner ring) and "††" (outer ring), the precision class is an integer for class 4 and class 2 bearings only.

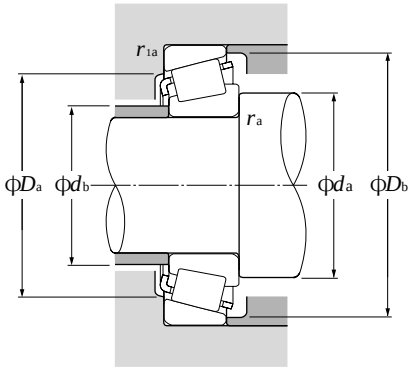

Equivalent radial load
dynamic

$P_r = XF_r + YF_a$

$\frac{F_a}{F_r} \leqq e$		$\frac{F_a}{F_r} > e$	
X	Y	X	Y
1	0	0.4	Y_2

static

$P_{or} = 0.5F_r + Y_oF_a$

When $P_{or} < F_r$ use $P_{or} = F_r$

For values of e, Y_2 and Y_o see the table below.

Bearing numbers	Abutment and fillet dimensions mm						Load center mm	Constant	Axial load factors		Mass kg
	d_a	d_b	D_a	D_b	r_{as} max	r_{1as} max	a	e	Y_2	Y_o	(approx.)
4T-6461/6420	96	89	129	140	3.5	3.3	14.8	0.36	1.66	0.91	4.26
4T-6576/6535	99	92	141	154	3.5	3.3	12.8	0.40	1.50	0.82	5.44
4T-H917840/H917810††	110	100	152	170	3.5	3.3	–0.5[1)]	0.73	0.82	0.45	6.57
4T-HH221430/HH221410	101	95	171	179	3.5	3.3	14.4	0.33	1.79	0.99	8.69
4T-LM814849/LM814810	91	85	105	113	3.5	3.3	–2.3[1)]	0.51	1.18	0.65	0.932
4T-34306/34478	90	84	110	116	3.5	2	–1.2[1)]	0.45	1.33	0.73	0.943
4T-42690/42620	91	85	114	121	3.5	3.3	2.8	0.42	1.43	0.79	1.41
4T-495AS/493	93	87	122	130	3.5	3.3	0.7	0.44	1.35	0.74	1.78
4T-H715348/H715311	98	88	118	132	3.5	3.3	8.7	0.47	1.27	0.70	2.84
4T-661/653	96	90	131	139	3.5	3.3	8.0	0.41	1.47	0.81	2.91
4T-756A/752	106	91	144	150	8	3.3	12.0	0.34	1.76	0.97	4.55
4T-HH221431/HH221410	103	97	171	179	3.5	3.3	14.4	0.33	1.79	0.99	8.52
# 4T-JM515649/JM515610	94	88	117	125	3	2.5	4.9	0.39	1.54	0.85	1.73
4T-47681/47620	95	89	119	128	3.5	3.3	3.9	0.40	1.48	0.82	1.78
4T-496/493	95	89	122	130	3.5	3.3	0.7	0.44	1.35	0.74	1.69
4T-581/572	96	90	125	133	3.5	3.3	5.5	0.40	1.49	0.82	2.26
4T-740/742	101	91	134	142	5	3.3	12.0	0.33	1.84	1.01	3.43
4T-27687/27620	96	89	115	120	3.5	1.5	–0.6[1)]	0.42	1.44	0.79	1.07
4T-47686/47620	97	90	119	128	3.5	3.3	3.9	0.40	1.48	0.82	1.72
4T-HM516448/HM516410	105	92	118	128	6.8	3.3	7.5	0.40	1.49	0.82	2.16
4T-495/493	97	90	122	130	3.5	3.3	0.7	0.44	1.35	0.74	1.64
4T-580/572	98	91	125	133	3.5	3.3	5.5	0.40	1.49	0.82	2.2
4T-582/572	104	91	125	133	6.8	3.3	5.5	0.40	1.49	0.82	2.19
4T-663/653	99	92	131	139	3.5	3.3	8.0	0.41	1.47	0.81	2.78
4T-749A/742	99	93	134	142	3.5	3.3	12.0	0.33	1.84	1.01	3.37
4T-595/592A	100	93	135	144	3.5	3.3	2.6	0.44	1.36	0.75	3.02
4T-663/652	99	92	134	141	3.5	3.3	8.0	0.41	1.47	0.81	3.15
4T-757/752	100	94	144	150	3.5	3.3	12.0	0.34	1.76	0.97	4.42
4T-6559C/6535	104	98	141	154	3.5	3.3	12.8	0.40	1.50	0.82	5.09
4T-842/832	101	94	149	155	3.5	3.3	18.5	0.30	2.00	1.10	5.46
4T-27689/27620	90	90	115	120	0.8	1.5	–0.6[1)]	0.42	1.44	0.79	1.06
4T-27690/27620	96	90	115	120	3.5	1.5	–0.6[1)]	0.42	1.44	0.79	1.05
4T-27691/27620	102	90	115	120	6.4	1.5	–0.6[1)]	0.42	1.44	0.79	1.04

Note: 3. Bearing numbers marked " # " designate **J-series** bearings. The tolerances of these bearings is listed in **Table 6.6** on **page A-42**.
1) " — " means that load center at outside on end of inner ring.

Inch series
J series

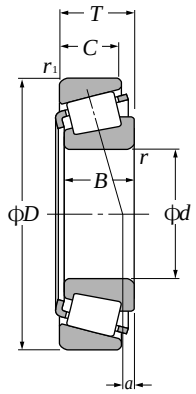

d 84.138～95.000mm

Boundary dimensions					Basic load ratings				Limiting speeds	
					dynamic	static	dynamic	static		
mm					kN		kgf		min^{-1}	
d	D	T	B	C	C_r	C_{or}	C_r	C_{or}	grease	oil
84.138	136.525	30.162	29.769	22.225	129	189	13 200	19 300	2 600	3 500
85.000	130.000	30.000	29.000	24.000	135	214	13 700	21 900	2 600	3 500
	140.000	39.000	38.000	31.500	197	297	20 100	30 500	2 500	3 400
85.026	150.089	44.450	46.672	36.512	261	360	26 600	37 000	2 400	3 200
85.725	133.350	30.162	29.769	22.225	129	189	13 200	19 300	2 600	3 500
	142.138	42.862	42.862	34.133	216	350	22 000	35 500	2 500	3 300
	146.050	41.275	41.275	31.750	206	295	21 000	30 000	2 500	3 300
	152.400	39.688	36.322	30.162	180	279	18 300	28 400	2 300	3 100
	161.925	47.625	48.260	38.100	270	385	27 500	39 000	2 300	3 100
87.960	148.430	28.575	28.971	21.433	138	215	14 100	21 900	2 300	3 100
88.900	121.442	15.083	15.083	11.112	56.5	88.0	5 750	9 000	2 700	3 600
	123.825	20.638	20.638	16.670	80.0	141	8 150	14 400	2 700	3 500
	148.430	28.575	28.971	21.433	138	215	14 100	21 900	2 300	3 100
	152.400	39.688	36.322	30.162	180	279	18 300	28 400	2 300	3 100
	161.925	47.625	48.260	38.100	270	385	27 500	39 000	2 300	3 100
	161.925	53.975	55.100	42.862	310	460	31 500	47 000	2 300	3 000
	168.275	53.975	56.363	41.275	340	460	34 500	46 500	2 200	3 000
89.974	146.975	40.000	40.000	32.500	227	340	23 200	34 500	2 400	3 200
90.000	145.000	35.000	34.000	27.000	189	279	19 300	28 400	2 400	3 200
	155.000	44.000	44.000	35.500	270	385	27 500	39 000	2 300	3 100
	190.000	50.800	46.038	31.750	281	365	28 700	37 000	1 800	2 400
90.488	161.925	47.625	48.260	38.100	270	385	27 500	39 000	2 300	3 100
92.075	146.050	33.338	34.925	26.195	163	266	16 700	27 100	2 400	3 100
	152.400	39.688	36.322	30.162	180	279	18 300	28 400	2 300	3 100
	168.275	41.275	41.275	30.162	222	340	22 700	35 000	2 100	2 800
93.662	148.430	28.575	28.971	21.433	138	215	14 100	21 900	2 300	3 100
95.000	150.000	35.000	34.000	27.000	180	279	18 300	28 400	2 300	3 100

Note: 1. Chamfer dimensions on the back face of the inner and outer rings of the bearing are larger than maximum values for installation dimensions r_{as} and r_{1as}.
2. As for the maximum value for inner and outer ring diameters of bearings whose bearing numbers are marked with "†" (inner ring) and "††" (outer ring), the precision class is an integer for class 4 and class 2 bearings only.

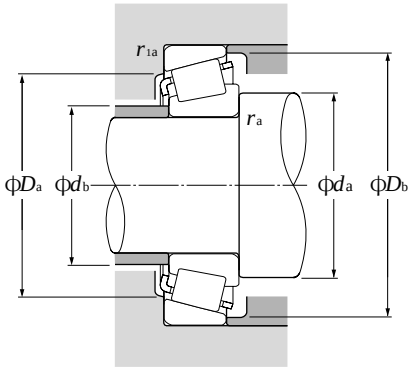

Equivalent radial load
dynamic

$P_r = XF_r + YF_a$

$\frac{F_a}{F_r} \leqq e$		$\frac{F_a}{F_r} > e$	
X	Y	X	Y
1	0	0.4	Y_2

static

$P_{or} = 0.5F_r + Y_oF_a$

When $P_{or} < F_r$ use $P_{or} = F_r$

For values of e, Y_2 and Y_o see the table below.

Bearing numbers	Abutment and fillet dimensions mm						Load center mm	Constant	Axial load factors		Mass kg
	d_a	d_b	D_a	D_b	r_{as} max	r_{1as} max	a	e	Y_2	Y_o	(approx.)
4T-498/493	98	91	122	130	3.5	3.3	0.7	0.44	1.35	0.74	1.6
# 4T-JM716648/JM716610	104	92	117	125	6	2.5	0.2	0.44	1.35	0.74	1.37
# 4T-JHM516849/JHM516810	100	94	125	134	3	2.5	5.9	0.41	1.47	0.81	2.3
4T-749/742	101	95	134	142	3.5	3.3	12.0	0.33	1.84	1.01	3.25
4T-497/492A	99	93	120	128	3.5	3.3	0.7	0.44	1.35	0.74	1.43
4T-HM617049/HM617010	106	95	125	137	4.8	3.3	6.9	0.43	1.39	0.76	2.69
4T-665/653	102	95	131	139	3.5	3.3	8.0	0.41	1.47	0.81	2.65
4T-596/592A	102	96	135	144	3.5	3.3	2.6	0.44	1.36	0.75	2.9
4T-758/752	103	97	144	150	3.5	3.3	12.0	0.34	1.76	0.97	4.26
4T-42346/42584	103	98	134	142	3	3	–3.0[1)]	0.49	1.22	0.67	1.99
4T-LL217849/LL217810	97	94	115	117	1.5	1.5	–2.9[1)]	0.33	1.81	1.00	0.452
4T-L217849/L217810	97	94	116	119	1.5	1.5	–0.7[1)]	0.33	1.82	1.00	0.737
4T-42350/42584	104	98	134	142	3	3	–3.0[1)]	0.49	1.22	0.67	1.96
4T-593/592A	104	98	135	144	3.5	3.3	2.6	0.44	1.36	0.75	2.78
4T-759/752	106	99	144	150	3.5	3.3	12.0	0.34	1.76	0.97	4.09
4T-6580/6535	109	102	141	154	3.5	3.3	12.8	0.40	1.50	0.82	4.73
4T-850/832	106	100	149	155	3.5	3.3	18.5	0.30	2.00	1.10	5.08
4T-HM218248†/HM218210††	112	99	133	141	7	3.5	8.6	0.33	1.80	0.99	2.55
# 4T-JM718149/JM718110	105	99	131	139	3	2.5	2.0	0.44	1.35	0.74	2.14
# 4T-JHM318448/JHM318410	106	100	140	148	3	2.5	10.1	0.34	1.76	0.97	3.32
# 4T-J90354/J90748	120	112	162	179	3.5	3.3	–12.9[1)]	0.87	0.69	0.38	6.32
4T-760/752	107	101	144	150	3.5	3.3	12.0	0.34	1.76	0.97	4.01
4T-47890/47820	107	101	131	140	3.5	3.3	0.6	0.45	1.34	0.74	2.08
4T-598A/592A	113	101	135	144	6.4	3.3	2.6	0.44	1.36	0.75	2.63
4T-681/672	110	104	149	160	3.5	3.3	3.0	0.47	1.28	0.70	3.87
4T-42368/42584	107	102	134	142	3	3	–3.0[1)]	0.49	1.22	0.67	1.8
# 4T-JM719149/JM719113	109	104	135	143	3	2.5	1.7	0.44	1.36	0.75	2.19

Note: 3. Bearing numbers marked " # " designate **J-series** bearings. The tolerances of these bearings is listed in **Table 6.6** on **page A-42**.
1) " — " means that load center at outside on end of inner ring.

Inch series
J series

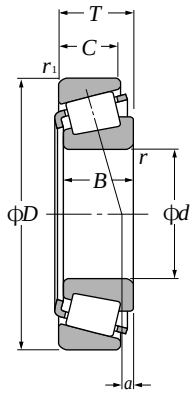

d 95.250～109.538mm

Boundary dimensions mm					Basic load ratings dynamic kN		Basic load ratings static kgf		Limiting speeds min-1	
d	D	T	B	C	Cr	Cor	Cr	Cor	grease	oil
95.250	130.175	20.638	21.433	16.670	81.0	147	8 300	15 000	2 500	3 300
	146.050	33.338	34.925	26.195	163	266	16 700	27 100	2 400	3 100
	147.638	35.717	36.322	26.192	180	279	18 300	28 400	2 300	3 100
	148.430	28.575	28.971	21.433	138	215	14 100	21 900	2 300	3 100
	152.400	39.688	36.322	30.162	180	279	18 300	28 400	2 300	3 100
	157.162	36.512	36.116	26.195	188	305	19 200	31 000	2 200	2 900
	168.275	41.275	41.275	30.162	222	340	22 700	35 000	2 100	2 800
	190.500	57.150	57.531	46.038	445	610	45 000	62 000	1 900	2 600
96.838	148.430	28.575	28.971	21.433	138	215	14 100	21 900	2 300	3 100
	188.912	50.800	46.038	31.750	281	365	28 700	37 000	1 800	2 400
98.425	157.162	36.512	36.116	26.195	188	305	19 200	31 000	2 200	2 900
	168.275	41.275	41.275	30.162	222	340	22 700	35 000	2 100	2 800
99.974	212.725	66.675	66.675	53.975	575	810	58 500	82 500	1 700	2 300
100.000	155.000	36.000	35.000	28.000	192	310	19 600	31 500	2 200	2 900
100.012	157.162	36.512	36.116	26.195	188	305	19 200	31 000	2 200	2 900
101.600	157.162	36.512	36.116	26.195	188	305	19 200	31 000	2 200	2 900
	168.275	41.275	41.275	30.162	222	340	22 700	35 000	2 100	2 800
	180.975	47.625	48.006	38.100	285	430	29 100	44 000	2 000	2 700
	190.500	57.150	57.531	44.450	380	555	38 500	56 500	2 000	2 600
	190.500	57.150	57.531	46.038	445	610	45 000	62 000	1 900	2 600
	190.500	57.150	57.531	46.038	445	610	45 000	62 000	1 900	2 600
	212.725	66.675	66.675	53.975	475	695	48 500	71 000	1 800	2 300
	212.725	66.675	66.675	53.975	575	810	58 500	82 500	1 700	2 300
104.775	180.975	47.625	48.006	38.100	285	430	29 100	44 000	2 000	2 700
107.950	158.750	23.020	21.438	15.875	102	166	10 400	17 000	2 100	2 800
	159.987	34.925	34.925	26.988	167	320	17 100	33 000	2 100	2 800
	165.100	36.512	36.512	26.988	191	315	19 500	32 000	2 100	2 700
	212.725	66.675	66.675	53.975	475	695	48 500	71 000	1 800	2 300
109.538	158.750	23.020	21.438	15.875	102	166	10 400	17 000	2 100	2 800

Note: 1. Chamfer dimensions on the back face of the inner and outer rings of the bearing are larger than maximum values for installation dimensions r_{as} and r_{1as}.
2. As for the maximum value for inner and outer ring diameters of bearings whose bearing numbers are marked with "†" (inner ring) and "††" (outer ring), the precision class is an integer for class 4 and class 2 bearings only.

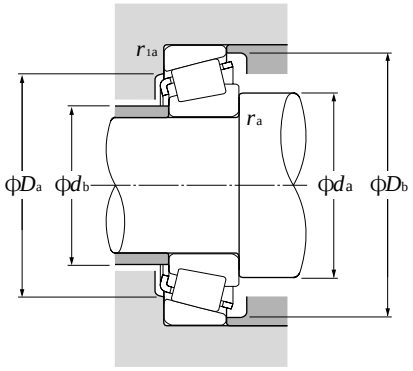

Equivalent radial load
dynamic

$P_r = XF_r + YF_a$

$\frac{F_a}{F_r} \leqq e$		$\frac{F_a}{F_r} > e$	
X	Y	X	Y
1	0	0.4	Y_2

static

$P_{or} = 0.5F_r + Y_oF_a$

When $P_{or} < F_r$ use $P_{or} = F_r$

For values of e, Y_2 and Y_o see the table below.

Bearing numbers	Abutment and fillet dimensions mm						Load center mm	Constant	Axial load factors		Mass kg
	d_a	d_b	D_a	D_b	r_{as} max	r_{1as} max	a	e	Y_2	Y_o	(approx.)
4T-L319249/L319210	103	101	122	125	1.5	1.5	–1.0[1)]	0.35	1.72	0.95	0.789
4T-47896/47820	110	103	131	140	3.5	3.3	0.6	0.45	1.34	0.74	1.95
4T-594A/592XE	113	104	135	142	5	0.8	2.6	0.44	1.36	0.75	2.09
4T-42375/42584	108	103	134	142	3	3	–3.0[1)]	0.49	1.22	0.67	1.75
4T-594/592A	110	104	135	144	3.5	3.3	2.6	0.44	1.36	0.75	2.51
4T-52375/52618	112	105	142	152	3.5	3.3	0.6	0.47	1.26	0.69	2.76
4T-683/672	113	106	149	160	3.5	3.3	3.0	0.47	1.28	0.70	3.72
4T-HH221440/HH221410	125	110	171	179	8	3.3	14.4	0.33	1.79	0.99	7.5
4T-42381/42584	110	104	134	142	3.5	3	–3.0[1)]	0.49	1.22	0.67	1.69
4T-90381/90744	125	113	161	179	3.5	3.3	–12.9[1)]	0.87	0.69	0.38	5.67
4T-52387/52618	114	108	142	152	3.5	3.3	0.6	0.47	1.26	0.69	2.62
4T-685/672	116	109	149	160	3.5	3.3	3.0	0.47	1.28	0.70	3.56
4T-HH224334†/HH224310	124	120	192	202	3.5	3.3	18.9	0.33	1.84	1.01	11.5
# 4T-JM720249/JM720210	115	109	140	149	3	2.5	–0.3[1)]	0.47	1.27	0.70	2.4
4T-52393/52618	116	109	142	152	3.5	3.3	0.6	0.47	1.26	0.69	2.55
4T-52400/52618	117	111	142	152	3.5	3.3	0.6	0.47	1.26	0.69	2.48
4T-687/672	118	112	149	160	3.5	3.3	3.0	0.47	1.28	0.70	3.4
4T-780/772††	119	113	161	168	3.5	3.3	8.1	0.39	1.56	0.86	5.11
4T-861/854	129	114	170	174	8	3.3	15.3	0.33	1.79	0.99	7
4T-HH221449/HH221410	131	116	171	179	8	3.3	14.4	0.33	1.79	0.99	7.06
4T-HH221449A/HH221410	122	116	171	179	3.5	3.3	14.4	0.33	1.79	0.99	7.06
4T-941/932	130	117	187	193	7	3.3	19.7	0.33	1.84	1.01	11.2
4T-HH224335/HH224310	132	121	192	202	7	3.3	18.9	0.33	1.84	1.01	11.3
4T-782/772††	122	116	161	168	3.5	3.3	8.1	0.39	1.56	0.86	4.92
4T-37425/37625	122	115	143	152	3.5	3.3	–14.0[1)]	0.61	0.99	0.54	1.37
4T-LM522546/LM522510	122	116	146	154	3.5	3.3	1.4	0.40	1.49	0.82	2.37
4T-56425/56650	123	117	149	159	3.5	3.3	–2.0[1)]	0.50	1.21	0.66	2.69
4T-936/932	137	122	187	193	8	3.3	19.7	0.33	1.84	1.01	10.7
4T-37431/37625	123	116	143	152	3.5	3.3	–14.0[1)]	0.61	0.99	0.54	1.33

Note: 3. Bearing numbers marked " # " designate **J-series** bearings. The tolerances of these bearings is listed in **Table 6.6** on **page A-42**.
1) " — " means that load center at outside on end of inner ring.

Inch series
J series

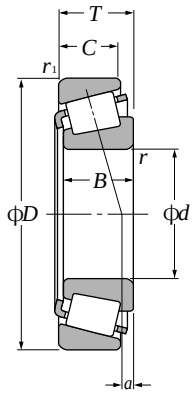

d 109.987 ~ 133.350mm

Boundary dimensions					Basic load ratings				Limiting speeds	
					dynamic	static	dynamic	static		
mm					kN		kgf		min^{-1}	
d	D	T	B	C	C_r	C_{or}	C_r	C_{or}	grease	oil
109.987	159.987	34.925	34.925	26.988	167	320	17 100	33 000	2 100	2 800
109.992	177.800	41.275	41.275	30.162	232	375	23 600	38 000	1 900	2 600
110.000	165.000	35.000	35.000	26.500	191	315	19 500	32 000	2 100	2 700
	180.000	47.000	46.000	38.000	305	480	31 000	49 000	1 900	2 600
111.125	214.312	55.562	52.388	39.688	405	560	41 500	57 000	1 500	2 000
114.300	177.800	41.275	41.275	30.162	232	375	23 600	38 000	1 900	2 600
	180.975	34.925	31.750	25.400	169	245	17 200	25 000	1 900	2 500
	212.725	66.675	66.675	53.975	475	695	48 500	71 000	1 800	2 300
	212.725	66.675	66.675	53.975	575	810	58 500	82 500	1 700	2 300
	228.600	53.975	49.428	38.100	430	620	44 000	63 500	1 400	1 900
115.087	190.500	47.625	49.212	34.925	300	475	30 500	48 500	1 800	2 500
117.475	180.975	34.925	31.750	25.400	169	245	17 200	25 000	1 900	2 500
120.000	170.000	25.400	25.400	19.050	127	210	13 000	21 400	2 000	2 600
120.650	234.950	63.500	63.500	49.212	525	825	53 500	84 000	1 500	2 000
123.825	182.562	39.688	38.100	33.338	224	435	22 900	44 000	1 800	2 400
127.000	182.562	39.688	38.100	33.338	224	435	22 900	44 000	1 800	2 400
	196.850	46.038	46.038	38.100	310	550	31 500	56 500	1 700	2 200
	215.900	47.625	47.625	34.925	320	540	32 500	55 000	1 600	2 100
	228.600	53.975	49.428	38.100	320	445	32 500	45 000	1 400	1 900
	228.600	53.975	49.428	38.100	430	620	44 000	63 500	1 400	1 900
	230.000	63.500	63.500	49.212	525	825	53 500	84 000	1 500	2 000
	254.000	77.788	82.550	61.912	740	1 070	75 500	109 000	1 400	1 900
128.588	206.375	47.625	47.625	34.925	315	520	32 000	53 000	1 700	2 200
130.175	196.850	46.038	46.038	38.100	310	550	31 500	56 500	1 700	2 200
	206.375	47.625	47.625	34.925	315	520	32 000	53 000	1 700	2 200
133.350	177.008	25.400	26.195	20.638	126	259	12 900	26 400	1 800	2 400

Note: 1. Chamfer dimensions on the back face of the inner and outer rings of the bearing are larger than maximum values for installation dimensions r_{as} and r_{1as}.
2. As for the maximum value for inner and outer ring diameters of bearings whose bearing numbers are marked with "†" (inner ring) and "††" (outer ring), the precision class is an integer for class 4 and class 2 bearings only.

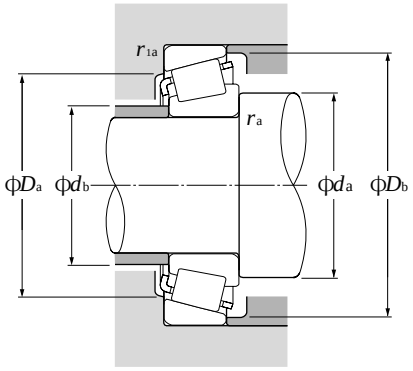

Equivalent radial load
dynamic

$P_r = XF_r + YF_a$

$\frac{F_a}{F_r} \leqq e$		$\frac{F_a}{F_r} > e$	
X	Y	X	Y
1	0	0.4	Y_2

static

$P_{or} = 0.5F_r + Y_oF_a$

When $P_{or} < F_r$ use $P_{or} = F_r$

For values of e, Y_2 and Y_o see the table below.

Bearing numbers	Abutment and fillet dimensions mm						Load center mm	Constant	Axial load factors		Mass kg
	d_a	d_b	D_a	D_b	r_{as} max	r_{1as} max	a	e	Y_2	Y_o	(approx.)
4T-LM522548/LM522510	133	118	146	154	8	3.3	1.4	0.40	1.49	0.82	2.24
4T-64433/64700	128	121	160	172	3.5	3.3	–1.1[1)]	0.52	1.16	0.64	3.77
# 4T-JM822049/JM822010	124	119	149	159	3	2.5	–3.0[1)]	0.50	1.21	0.66	2.52
# 4T-JHM522649/JHM522610	127	122	162	172	3	2.5	6.0	0.41	1.48	0.81	4.61
4T-H924045/H924010	139	131	186	205	3.5	3.3	–6.8[1)]	0.67	0.89	0.49	8.18
4T-64450/64700	131	125	160	172	3.5	3.3	–1.1[1)]	0.52	1.16	0.64	3.52
4T-68450/68712††	130	123	163	172	3.5	3.3	–5.4[1)]	0.50	1.21	0.66	2.93
4T-938/932	141	128	187	193	7	3.3	19.7	0.33	1.84	1.01	10.1
4T-HH224346/HH224310	143	131	192	202	7	3.3	18.9	0.33	1.84	1.01	10.2
4T-HM926740/HM926710	146	142	200	219	3.5	3.3	–13.5[1)]	0.74	0.81	0.45	9.76
4T-71453/71750	133	126	171	181	3.5	3.3	6.7	0.42	1.44	0.79	5.11
4T-68462/68712††	132	125	163	172	3.5	3.3	–5.4[1)]	0.50	1.21	0.66	2.78
# 4T-JL724348/JL724314	132	127	156	163	3.3	3.3	–7.9[1)]	0.46	1.31	0.72	1.67
4T-95475/95925	149	137	209	217	6.4	3.3	14.0	0.37	1.62	0.89	12.6
4T-48286/48220	139	133	168	176	3.5	3.3	5.7	0.31	1.97	1.08	3.52
4T-48290/48220	141	135	168	176	3.5	3.3	5.7	0.31	1.97	1.08	3.33
4T-67388/67322	144	138	180	189	3.5	3.3	6.3	0.34	1.74	0.96	5.1
4T-74500/74850	148	141	196	208	3.5	3.3	–2.2[1)]	0.49	1.23	0.68	7.05
4T-97500/97900	151	144	197	213	3.5	3.3	–13.4[1)]	0.74	0.81	0.45	8.43
4T-HM926747/HM926710	156	143	200	219	3.5	3.3	–13.5[1)]	0.74	0.81	0.45	8.83
4T-95500/95905	154	142	207	217	6.4	3.3	14.0	0.37	1.62	0.89	12.9
4T-HH228349/HH228310	164	148	223	234	9.7	6.4	23.4	0.32	1.87	1.03	19.5
4T-799/792	146	140	186	198	3.3	3.3	1.9	0.46	1.31	0.72	5.77
4T-67389/67322	146	141	180	189	3.5	3.3	6.3	0.34	1.74	0.96	4.87
4T-799A/792	148	142	186	198	3.5	3.3	1.9	0.46	1.31	0.72	5.65
4T-L327249/L327210	142	140	167	171	1.5	1.5	–3.7[1)]	0.35	1.72	0.95	1.7

Note: 3. Bearing numbers marked " # " designate **J-series** bearings. The tolerances of these bearings is listed in **Table 6.6** on **page A-42**.
1) " — " means that load center at outside on end of inner ring.

Inch series
J series

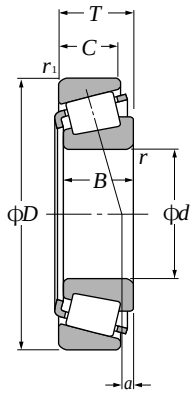

d 133.350～196.850mm

Boundary dimensions mm					Basic load ratings dynamic kN	static kN	dynamic kgf	static kgf	Limiting speeds min-1	
d	D	T	B	C	Cr	Cor	Cr	Cor	grease	oil
133.350	190.500	39.688	39.688	33.338	236	475	24 100	48 500	1 700	2 300
	196.850	46.038	46.038	38.100	310	550	31 500	56 500	1 700	2 200
	196.850	46.038	46.038	38.100	310	550	31 500	56 500	1 700	2 200
	215.900	47.625	47.625	34.925	320	540	32 500	55 000	1 600	2 100
	234.950	63.500	63.500	49.212	525	825	53 500	84 000	1 500	2 000
136.525	190.500	39.688	39.688	33.338	236	475	24 100	48 500	1 700	2 300
	228.600	57.150	57.150	44.450	445	735	45 500	75 000	1 500	2 000
139.700	215.900	47.625	47.625	34.925	320	540	32 500	55 000	1 600	2 100
	228.600	57.150	57.150	44.450	445	735	45 500	75 000	1 500	2 000
	254.000	66.675	66.675	47.625	550	910	56 000	92 500	1 400	1 800
142.875	200.025	41.275	39.688	34.130	239	490	24 300	50 000	1 600	2 100
	200.025	41.275	39.688	34.130	239	490	24 300	50 000	1 600	2 100
146.050	193.675	28.575	28.575	23.020	165	340	16 800	35 000	1 600	2 200
	254.000	66.675	66.675	47.625	550	910	56 000	92 500	1 400	1 800
152.400	192.088	25.000	24.000	19.000	130	261	13 200	26 700	1 600	2 100
	222.250	46.830	46.830	34.925	315	585	32 000	60 000	1 500	2 000
158.750	205.583	23.812	23.812	18.258	126	247	12 900	25 200	1 500	2 000
	225.425	41.275	39.688	33.338	254	555	25 900	56 500	1 400	1 900
165.100	225.425	41.275	39.688	33.338	254	555	25 900	56 500	1 400	1 900
170.000	230.000	39.000	38.000	31.000	282	520	28 700	53 000	1 400	1 800
177.800	227.012	30.162	30.162	23.020	181	415	18 500	42 000	1 300	1 800
	247.650	47.625	47.625	38.100	340	690	35 000	70 500	1 300	1 700
180.000	250.000	47.000	45.000	37.000	370	710	37 500	72 500	1 300	1 700
190.000	260.000	46.000	44.000	36.500	365	720	37 000	73 500	1 200	1 600
196.850	241.300	23.812	23.017	17.462	160	330	16 300	33 500	1 200	1 600

Note: 1. Chamfer dimensions on the back face of the inner and outer rings of the bearing are larger than maximum values for installation dimensions r_{as} and r_{1as}.
2. Bearing numbers marked " # " designate **J-series** bearings. The tolerances of these bearings is listed in **Table 6.6** on **page A-42**.

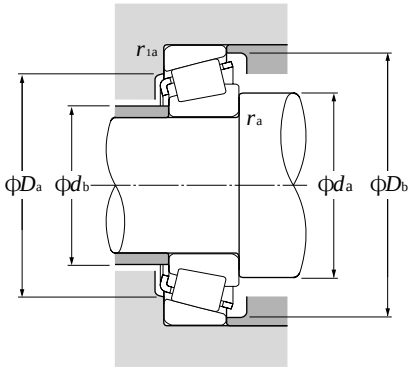

Equivalent radial load
dynamic

$P_r = XF_r + YF_a$

$\frac{F_a}{F_r} \leqq e$		$\frac{F_a}{F_r} > e$	
X	Y	X	Y
1	0	0.4	Y_2

static

$P_{or} = 0.5F_r + Y_oF_a$

When $P_{or} < F_r$ use $P_{or} = F_r$

For values of e, Y_2 and Y_o see the table below.

Bearing numbers	Abutment and fillet dimensions mm						Load center mm	Constant	Axial load factors		Mass kg
	d_a	d_b	D_a	D_b	r_{as} max	r_{1as} max	a	e	Y_2	Y_o	(approx.)
4T-48385/48320	148	142	177	184	3.5	3.3	4.0	0.32	1.87	1.03	3.64
4T-67390/67322	149	143	180	189	3.5	3.3	6.3	0.34	1.74	0.96	4.63
4T-67391/67322	157	143	180	189	8	3.3	6.3	0.34	1.74	0.96	4.59
4T-74525/74850	152	146	196	208	3.5	3.3	–2.2[1)]	0.49	1.23	0.68	6.56
4T-95525/95925	166	148	209	217	9.7	3.3	14.0	0.37	1.62	0.89	11.3
4T-48393/48320	151	144	177	184	3.5	3.3	4.0	0.32	1.87	1.03	3.43
4T-896/892	156	150	205	216	3.5	3.3	6.0	0.42	1.43	0.78	9.07
4T-74550/74850	158	151	196	208	3.5	3.3	–2.2[1)]	0.49	1.23	0.68	6.05
4T-898/892	160	153	205	216	3.5	3.3	6.0	0.42	1.43	0.78	8.76
4T-99550/99100	170	156	227	238	7	3.3	12.1	0.41	1.47	0.81	14.3
4T-48684/48620	166	151	185	193	8	3.3	3.1	0.34	1.78	0.98	3.85
4T-48685/48620	158	151	185	193	3.5	3.3	3.1	0.34	1.78	0.98	3.89
4T-36690/36620	155	153	182	188	1.5	1.5	–5.0[1)]	0.37	1.63	0.90	2.27
4T-99575/99100	175	162	227	238	7	3.3	12.1	0.41	1.47	0.81	13.5
4T-L630349/L630310	162	158	183	187	2	2	–10.0[1)]	0.42	1.44	0.79	1.53
4T-M231648/M231610	178	163	207	213	8	1.5	5.9	0.33	1.8	0.99	5.72
4T-L432349/L432310	168	166	195	199	1.5	1.5	–9.8[1)]	0.37	1.61	0.88	1.89
4T-46780/46720	176	169	209	218	3.5	3.3	–2.6[1)]	0.38	1.57	0.86	5.2
4T-46790/46720	181	174	209	218	3.5	3.3	–2.6[1)]	0.38	1.57	0.86	4.69
# 4T-JHM534149/JHM534110	184	178	217	224	3	2.5	–4.7[1)]	0.38	1.57	0.86	4.37
4T-36990/36920	188	186	214	221	1.5	1.5	–12.8[1)]	0.44	1.36	0.75	2.92
4T-67790/67720	194	188	229	240	3.5	3.3	–4.8[1)]	0.44	1.36	0.75	6.57
# 4T-JM736149/JM736110	196	190	232	243	3	2.5	–9.0[1)]	0.48	1.25	0.69	6.76
# 4T-JM738249/JM738210	206	200	242	252	3	2.5	–10.9[1)]	0.48	1.26	0.69	6.85
4T-LL639249/LL639210	205	203	232	236	1.5	1.5	–17.3[1)]	0.42	1.44	0.79	2.07

1) "—" means that load center at outside on end of inner ring.

Back-to-back arrangement

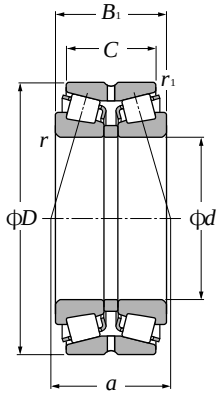

d 40～70mm

Boundary dimensions mm						Basic load ratings dynamic kN		static kgf		Limiting speeds min-1	
d	D	B_1	C	$r_{s\,min}$ 1)	$r_{1s\,min}$ 1)	C_r	C_{or}	C_r	C_{or}	grease	oil
40	80	45	37.5	1.5	0.6	105	134	10 700	13 700	4 100	5 500
	80	55	43.5	1.5	0.6	136	187	13 900	19 100	4 100	5 500
	90	56	39.5	2	0.6	132	171	13 500	17 400	3 200	4 200
	90	56	45.5	2	0.6	157	204	16 000	20 800	3 700	4 900
45	85	47	37.5	1.5	0.6	116	157	11 800	16 000	3 700	4 900
	85	55	43.5	1.5	0.6	141	200	14 300	20 400	3 700	4 900
	100	60	41.5	2	0.6	165	218	16 800	22 200	2 800	3 800
	100	60	49.5	2	0.6	191	251	19 500	25 600	3 300	4 400
50	90	49	39.5	1.5	0.6	132	186	13 500	18 900	3 400	4 500
	90	55	43.5	1.5	0.6	150	218	15 300	22 200	3 400	4 500
	110	64	43.5	2.5	0.6	194	260	19 800	26 600	2 600	3 500
	110	64	51.5	2.5	0.6	227	305	23 200	31 000	3 000	4 000
	110	90	71.5	2.5	0.6	315	465	32 000	47 500	3 000	4 000
55	100	51	41.5	2	0.6	160	221	16 300	22 600	3 100	4 100
	100	60	48.5	2	0.6	186	269	18 900	27 400	3 100	4 100
	120	70	49	2.5	0.6	226	305	23 100	31 500	2 400	3 100
	120	70	57	2.5	0.6	266	360	27 100	36 500	2 700	3 700
	120	97	76	2.5	0.6	370	550	37 500	56 000	2 700	3 700
60	110	53	43.5	2	0.6	180	249	18 300	25 400	2 800	3 800
	110	66	54.5	2	0.6	223	330	22 700	33 500	2 800	3 800
	130	74	51	3	1	258	350	26 300	36 000	2 200	2 900
	130	74	59	3	1	310	420	31 500	43 000	2 500	3 400
	130	104	81	3	1	420	625	42 500	64 000	2 500	3 400
65	120	56	46.5	2	0.6	211	295	21 500	30 000	2 600	3 500
	120	73	61.5	2	0.6	273	410	27 800	42 000	2 600	3 500
	140	79	53	3	1	297	410	30 500	41 500	2 000	2 700
	140	79	63	3	1	350	475	35 500	48 500	2 300	3 100
	140	108	84	3	1	470	700	47 500	71 500	2 300	3 100
70	125	59	48.5	2	0.6	225	325	23 000	33 000	2 400	3 200
	125	74	61.5	2	0.6	285	440	29 000	45 000	2 400	3 200
	150	83	57	3	1	330	460	33 500	46 500	1 900	2 500
	150	83	67	3	1	395	545	40 000	55 500	2 200	2 900
	150	116	92	3	1	530	805	54 000	82 500	2 200	2 900

1) Minimum allowable dimension for chamfer dimension r or r_1.

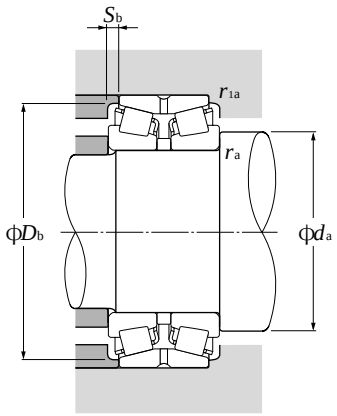

Equivalent radial load
dynamic

$P_r = XF_r + YF_a$

$\frac{F_a}{F_r} \leqq e$		$\frac{F_a}{F_r} > e$	
X	Y	X	Y
1	Y_1	0.67	Y_2

static

$P_{or} = F_r + Y_o F_a$

For values of e, Y_2 and Y_o see the table below.

Bearing numbers	Abutment and fillet dimensions mm					Load center mm	Constant	Axial load factors			Mass kg
	d_a min	D_b min	S_b min	r_{as} max	r_{1as} max	a	e	Y_1	Y_2	Y_o	(approx.)
4T-430208X	48.5	75	3.5	1.5	0.6	38.5	0.37	1.80	2.68	1.76	0.929
4T-432208X	48.5	75	5.5	1.5	0.6	43	0.37	1.80	2.68	1.76	1.18
4T-430308DX	50	86.5	8	2	0.6	64.5	0.83	0.82	1.22	0.80	1.56
4T-430308	50	82	5	2	0.6	44.5	0.35	1.96	2.91	1.91	1.61
4T-430209	53.5	80	4.5	1.5	0.6	42	0.40	1.67	2.48	1.63	1.04
4T-432209	53.5	81	5.5	1.5	0.6	46	0.40	1.67	2.48	1.63	1.27
∗4T-430309DX	55	96	9	2	0.6	70	0.83	0.82	1.22	0.80	2.11
4T-430309	55	93	5	2	0.6	47.5	0.35	1.96	2.91	1.91	2.11
4T-430210	58.5	85	4.5	1.5	0.6	44.5	0.42	1.61	2.39	1.57	1.18
432210U	58.5	85	5.5	1.5	0.6	47.5	0.42	1.61	2.39	1.57	1.36
4T-430310DX	62	105	10	2	0.6	75	0.83	0.82	1.22	0.80	2.65
4T-430310	62	102	6	2	0.6	51	0.35	1.96	2.91	1.91	2.72
432310U	62	102	9	2	0.6	62.5	0.35	1.96	2.91	1.91	3.98
4T-430211X	65	94	4.5	2	0.6	47	0.40	1.67	2.48	1.63	1.55
432211U	65	95	5.5	2	0.6	51	0.40	1.67	2.48	1.63	1.85
4T-430311DX	67	113	10.5	2	0.6	83	0.83	0.82	1.22	0.80	3.42
430311XU	67	111	6.5	2	0.6	55.5	0.35	1.96	2.91	1.91	3.48
432311U	67	111	10.5	2	0.6	66.5	0.35	1.96	2.91	1.91	5.05
4T-430212X	70	103	4.5	2	0.6	49.5	0.40	1.67	2.48	1.63	1.99
432212U	70	104	5.5	2	0.6	56	0.40	1.67	2.48	1.63	2.49
4T-430312DX	74	124	11.5	2.5	1	88.5	0.83	0.82	1.22	0.80	4.22
430312U	74	120	7.5	2.5	1	59.5	0.35	1.96	2.91	1.91	4.31
432312U	74	120	11.5	2.5	1	71	0.35	1.96	2.91	1.91	6.29
4T-430213X	75	113	4.5	2	0.6	53.5	0.40	1.67	2.48	1.63	2.49
432213U	75	115	5.5	2	0.6	61.5	0.40	1.67	2.48	1.63	3.33
4T-430313DX	79	133	13	2.5	1	94.5	0.83	0.82	1.22	0.80	5.16
430313XU	79	130	8	2.5	1	64	0.35	1.96	2.91	1.91	5.32
432313U	79	130	12	2.5	1	74.5	0.35	1.96	2.91	1.91	7.55
4T-430214	80	118	5	2	0.6	57	0.42	1.61	2.39	1.57	2.67
432214U	80	119	6	2	0.6	64.5	0.42	1.61	2.39	1.57	3.56
4T-430314DX	84	142	13	2.5	1	101	0.83	0.82	1.22	0.80	6.23
430314XU	84	140	8	2.5	1	67	0.35	1.96	2.91	1.91	6.37
432314U	84	140	12	2.5	1	80.5	0.35	1.96	2.91	1.91	9.28

Back-to-back arrangement

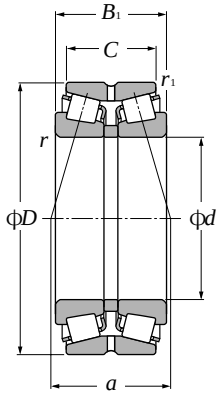

d 75～105mm

Boundary dimensions mm						Basic load ratings dynamic kN	static kN	dynamic kgf	static kgf	Limiting speeds min-1	
d	D	B_1	C	$r_{s\,min}$ 1)	$r_{1s\,min}$ 1)	C_r	C_{or}	C_r	C_{or}	grease	oil
75	130	62	51.5	2	0.6	238	350	24 300	36 000	2 300	3 000
	130	74	61.5	2	0.6	288	445	29 300	45 500	2 300	3 000
	160	87	59	3	1	370	510	37 500	52 000	1 700	2 300
	160	87	69	3	1	435	605	44 500	62 000	2 000	2 700
	160	125	99	3	1	610	935	62 000	95 500	2 000	2 700
80	140	64	51.5	2.5	0.6	274	400	27 900	40 500	2 100	2 800
	140	78	63.5	2.5	0.6	340	530	35 000	54 000	2 100	2 800
	170	92	61	3	1	405	565	41 500	58 000	1 600	2 200
	170	92	73	3	1	500	700	51 000	71 500	1 900	2 500
	170	131	104	3	1	680	1 050	69 000	107 000	1 900	2 500
85	150	70	57	2.5	0.6	315	465	32 000	47 000	2 000	2 700
	150	86	69	2.5	0.6	385	600	39 000	61 500	2 000	2 700
	180	98	65	4	1	425	585	43 000	59 500	1 500	2 100
	180	98	77	4	1	520	725	53 000	74 000	1 800	2 400
	180	137	108	4	1	690	1 050	70 500	107 000	1 800	2 400
90	160	74	61	2.5	0.6	355	535	36 500	54 500	1 900	2 500
	160	94	77	2.5	0.6	450	720	46 000	73 500	1 900	2 500
	190	102	69	4	1	465	645	47 500	65 500	1 500	1 900
	190	102	81	4	1	580	815	59 000	83 000	1 700	2 300
	190	144	115	4	1	770	1 190	78 500	121 000	1 700	2 300
95	170	78	63	3	1	385	580	39 500	59 000	1 800	2 400
	170	100	83	3	1	515	835	52 500	85 000	1 800	2 400
	200	108	85	4	1	630	890	64 000	91 000	1 600	2 100
	200	108	85	3	1	540	735	55 500	75 000	1 600	2 100
	200	151	118	4	1	865	1 340	88 000	137 000	1 600	2 100
100	180	83	67	3	1	440	675	45 000	68 500	1 700	2 200
	180	107	87	3	1	565	925	58 000	94 500	1 700	2 200
	215	112	87	4	1	700	995	71 500	102 000	1 500	2 000
	215	112	87	3	1	590	800	60 000	81 500	1 500	2 000
	215	162	127	4	1	980	1 540	100 000	157 000	1 500	2 000
105	190	88	70	3	1	490	760	50 000	77 500	1 600	2 100
	190	115	95	3	1	650	1 080	66 000	111 000	1 600	2 100
	225	116	91	3	1	625	845	63 500	86 000	1 400	1 900

1) Minimum allowable dimension for chamfer dimension r or r_1.

Note: 1. When incorporating bearings with bearing numbers marked with " ∗ ", please consult NTN Engineering.

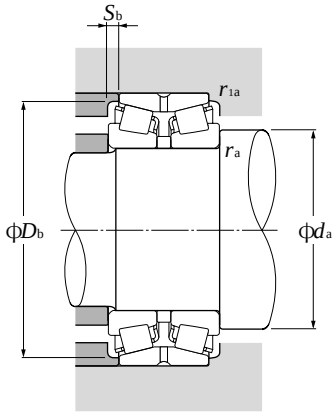

Equivalent radial load
dynamic

$P_r = XF_r + YF_a$

$\frac{F_a}{F_r} \leqq e$		$\frac{F_a}{F_r} > e$	
X	Y	X	Y
1	Y_1	0.67	Y_2

static

$P_{or} = F_r + Y_o F_a$

For values of e, Y_2 and Y_o see the table below.

Bearing numbers	Abutment and fillet dimensions mm					Load center mm	Constant	Axial load factors			Mass kg
	d_a min	D_b min	S_b min	r_{as} max	r_{1as} max	a	e	Y_1	Y_2	Y_o	(approx.)
4T-430215	85	124	5	2	0.6	61.5	0.44	1.55	2.31	1.52	2.99
432215U	85	125	6	2	0.6	67	0.44	1.55	2.31	1.52	3.68
430315DU	89	151	14	2.5	1	107	0.83	0.82	1.22	0.80	7.31
430315XU	89	149	9	2.5	1	70.5	0.35	1.96	2.91	1.91	7.71
432315U	89	149	13	2.5	1	87.5	0.35	1.96	2.91	1.91	11.5
430216XU	92	132	6	2	0.6	63	0.42	1.61	2.39	1.57	3.65
432216XU	92	134	7	2	0.6	69.5	0.42	1.61	2.39	1.57	4.58
430316DU	94	159	15.5	2.5	1	114	0.83	0.82	1.22	0.80	8.99
430316XU	94	159	9.5	2.5	1	75.5	0.35	1.96	2.91	1.91	9.55
432316U	94	159	13.5	2.5	1	90.5	0.35	1.96	2.91	1.91	13.6
430217XU	97	141	6.5	2	0.6	69	0.42	1.61	2.39	1.57	4.59
432217XU	97	142	8.5	2	0.6	76	0.42	1.61	2.39	1.57	5.85
430317DU	103	169	16.5	3	1	121	0.83	0.82	1.22	0.80	10.6
430317XU	103	167	10.5	3	1	80	0.35	1.96	2.91	1.91	11.2
432317U	103	167	14.5	3	1	96	0.35	1.96	2.91	1.91	15.4
430218U	102	150	6.5	2	0.6	73	0.42	1.61	2.39	1.57	5.66
432218U	102	152	8.5	2	0.6	81	0.42	1.61	2.39	1.57	7.35
430318DU	108	180	16.5	3	1	127	0.83	0.82	1.22	0.80	12.5
430318U	108	177	10.5	3	1	84	0.35	1.96	2.91	1.91	12.9
432318U	108	177	14.5	3	1	100	0.35	1.96	2.91	1.91	18.2
430219XU	109	159	7.5	2.5	1	76.5	0.42	1.61	2.39	1.57	8.01
432219XU	109	161	8.5	2.5	1	86.5	0.42	1.61	2.39	1.57	9.04
＊430319XU	113	186	11.5	3	1	89	0.35	1.96	2.91	1.91	15.0
430319X	113	186	11.5	3	1	88.5	0.35	1.95	2.90	1.91	14.0
432319U	113	186	16.5	3	1	106	0.35	1.96	2.91	1.91	21.5
430220XU	114	168	8	2.5	1	81.5	0.42	1.61	2.39	1.57	8.11
432220XU	114	171	10	2.5	1	92	0.42	1.61	2.39	1.57	10.7
＊430320XU	118	200	12.5	3	1	92	0.35	1.96	2.91	1.91	18.4
430320X	118	200	12.5	3	1	93.5	0.35	1.95	2.90	1.91	16.5
432320U	118	200	17.5	3	1	113	0.35	1.96	2.91	1.91	26.5
430221XU	119	178	9	2.5	1	86	0.42	1.61	2.39	1.57	9.73
432221XU	119	180	10	2.5	1	97.5	0.42	1.61	2.39	1.57	13.1
430321X	123	209	12.5	3	1	96.5	0.35	1.95	2.90	1.91	19.6

Back-to-back arrangement

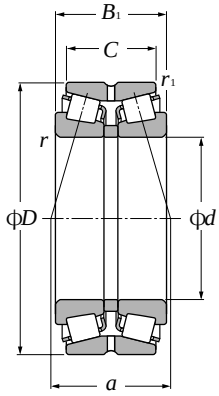

d 105～140mm

Boundary dimensions mm						Basic load ratings dynamic kN	static kN	dynamic kgf	static kgf	Limiting speeds min-1	
d	D	B_1	C	$r_{s\,min}$ 1)	$r_{1s\,min}$ 1)	C_r	C_{or}	C_r	C_{or}	grease	oil
105	225	116	91	4	1	750	1 060	76 000	109 000	1 400	1 900
	225	170	133	3	1	955	1 470	97 500	150 000	1 400	1 900
110	180	56	50	2.5	0.6	228	340	23 300	35 000	1 600	2 200
	180	70	56	2.5	0.6	298	485	30 500	49 500	1 600	2 200
	200	92	74	3	1	555	865	56 500	88 500	1 500	2 000
	200	121	101	3	1	720	1 210	73 500	124 000	1 500	2 000
	240	118	93	4	1	825	1 180	84 000	120 000	1 400	1 800
	240	118	93	3	1	685	925	69 500	94 500	1 400	1 800
	240	181	142	3	1	1 070	1 660	109 000	169 000	1 400	1 800
	240	181	142	4	1	1 210	1 940	123 000	197 000	1 400	1 800
120	180	46	41	2.5	0.6	193	298	19 700	30 500	1 500	2 100
	180	58	46	2.5	0.6	230	375	23 500	38 000	1 500	2 100
	200	62	55	2.5	0.6	263	435	26 800	44 500	1 500	2 000
	200	78	62	2.5	0.6	370	610	38 000	62 500	1 500	2 000
	215	97	78	3	1	595	940	60 500	96 000	1 400	1 900
	215	132	109	3	1	790	1 360	80 500	139 000	1 400	1 900
	260	128	101	4	1	960	1 390	97 500	142 000	1 200	1 700
	260	128	101	3	1	800	1 100	81 500	112 000	1 200	1 700
	260	188	145	4	1	1 400	2 270	143 000	231 000	1 200	1 700
130	200	52	46	2.5	0.6	224	365	22 900	37 500	1 400	1 900
	200	65	52	2.5	0.6	294	490	29 900	50 000	1 400	1 900
	210	64	57	2.5	0.6	315	485	32 000	49 500	1 400	1 800
	210	80	64	2.5	0.6	410	675	42 000	69 000	1 400	1 800
	230	98	78.5	4	1	640	1 010	65 500	103 000	1 300	1 700
	230	145	117.5	4	1	905	1 630	92 500	166 000	1 300	1 700
	280	137	107.5	5	1.5	1 110	1 660	113 000	169 000	1 200	1 500
140	210	53	47	2.5	0.6	262	415	26 700	42 500	1 300	1 800
	210	66	53	2.5	0.6	300	535	30 500	54 500	1 300	1 800
	225	68	61	3	1	370	580	37 500	59 500	1 200	1 700
	225	84	68	3	1	390	650	40 000	66 000	1 200	1 700
	250	102	82.5	3	1	640	970	65 500	99 000	1 200	1 600
	250	102	82.5	4	1	720	1 140	73 500	117 000	1 200	1 600
	250	153	125.5	4	1	1 050	1 840	107 000	188 000	1 200	1 600
	300	145	115.5	5	1.5	1 260	1 900	129 000	194 000	1 100	1 400
	300	145	115.5	4	1.5	1 100	1 560	112 000	160 000	1 100	1 400

1) Minimum allowable dimension for chamfer dimension r or r_1.

Note: 1. When incorporating bearings with bearing numbers marked with " ∗ ", please consult NTN Engineering.

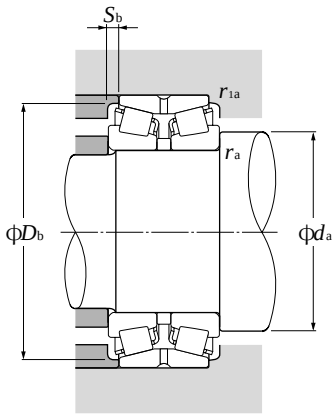

Equivalent radial load
dynamic

$P_r = XF_r + YF_a$

$\frac{F_a}{F_r} \leqq e$		$\frac{F_a}{F_r} > e$	
X	Y	X	Y
1	Y_1	0.67	Y_2

static

$P_{or} = F_r + Y_o F_a$

For values of e, Y_2 and Y_o see the table below.

Bearing numbers	Abutment and fillet dimensions mm					Load center mm	Constant	Axial load factors			Mass kg
	d_a min	D_b min	S_b min	r_{as} max	r_{1as} max	a	e	Y_1	Y_2	Y_o	(approx.)
∗ 430321XU	123	209	12.5	3	1	96.5	0.35	1.96	2.91	1.91	21.0
432321	119	208	18.5	2.5	1	117.5	0.35	1.96	2.90	1.91	30.2
413122	122	169	3	2	0.6	66.5	0.40	1.68	2.50	1.64	5.20
423122	122	166	7	2	0.6	66.5	0.33	2.03	3.02	1.98	6.38
430222XU	124	188	9	2.5	1	90	0.42	1.61	2.39	1.57	11.4
432222XU	124	190	10	2.5	1	102	0.42	1.61	2.39	1.57	15.5
∗ 430322U	128	222	12.5	3	1	100	0.35	1.96	2.91	1.91	24.5
430322	128	222	12.5	3	1	97.5	0.35	1.95	2.90	1.91	22.1
432322	128	222	19.5	3	1	124	0.35	1.95	2.90	1.91	35.6
∗ 432322U	128	222	19.5	3	1	127	0.35	1.96	2.91	1.91	38.2
413024	132	171	2.5	2	0.6	59	0.37	1.80	2.69	1.76	3.85
423024	132	170	6	2	0.6	66	0.37	1.80	2.69	1.76	4.41
413124	132	184	3.5	2	0.6	76.5	0.43	1.57	2.34	1.53	7.24
423124	132	188	8	2	0.6	76.5	0.37	1.80	2.69	1.76	8.96
430224XU	134	203	9.5	2.5	1	98	0.44	1.55	2.31	1.52	13.6
432224XU	134	204	11.5	2.5	1	112	0.44	1.55	2.31	1.52	18.9
430324XU	138	239	13.5	3	1	107	0.35	1.96	2.91	1.91	30.5
430324X	138	239	13.5	3	1	106	0.35	1.95	2.90	1.91	29.4
432324U	138	239	21.5	3	1	130	0.35	1.96	2.91	1.91	47.0
413026	142	186	3	2	0.6	66	0.37	1.80	2.69	1.76	5.55
423026	142	189	6.5	2	0.6	71.5	0.37	1.80	2.69	1.76	6.62
413126	142	196	3.5	2	0.6	69	0.33	2.03	3.02	1.98	7.83
423126	142	198	8	2	0.6	79.5	0.37	1.80	2.69	1.76	9.77
430226XU	148	218	9.5	3	1	102	0.44	1.55	2.31	1.52	15.9
432226XU	148	219	13.5	3	1	124	0.44	1.55	2.31	1.52	24.1
430326XU	152	255	14.5	4	1.5	116	0.35	1.96	2.91	1.91	37.9
413028	152	199	3	2	0.6	68.5	0.37	1.80	2.69	1.76	5.88
423028	152	197	6.5	2	0.6	75	0.37	1.84	2.74	1.80	7.11
413128	154	210	3.5	2.5	1	73.5	0.33	2.03	3.02	1.98	9.18
423128	154	209	8	2.5	1	88	0.37	1.80	2.69	1.76	11.8
430228X	158	237	9.5	3	1	106	0.43	1.57	2.34	1.53	18.0
∗ 430228XU	158	237	9.5	3	1	107	0.44	1.55	2.31	1.52	19.9
432228XU	158	238	13.5	3	1	131	0.44	1.55	2.31	1.52	30.1
∗ 430328XU	162	273	14.5	4	1.5	123	0.35	1.96	2.91	1.91	46.6
430328X	162	272	14.5	4	1.5	123	0.35	1.95	2.90	1.91	44.4

Back-to-back arrangement

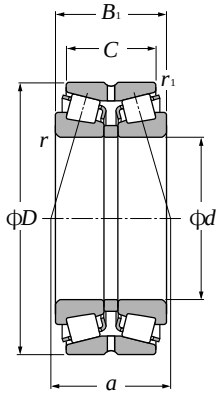

d 150～190mm

Boundary dimensions mm						Basic load ratings dynamic kN	static kN	dynamic kgf	static kgf	Limiting speeds min-1	
d	D	B_1	C	$r_{s\,min}$ 1)	$r_{1s\,min}$ 1)	C_r	C_{or}	C_r	C_{or}	grease	oil
150	225	56	50	3	1	274	430	27 900	44 000	1 200	1 600
	225	70	56	3	1	355	630	36 000	64 500	1 200	1 600
	250	80	71	3	1	485	805	49 500	82 000	1 200	1 500
	250	100	80	3	1	600	1 040	61 500	106 000	1 200	1 500
	270	109	87	4	1	770	1 210	78 500	123 000	1 100	1 500
	270	164	130	4	1	1 200	2 140	122 000	218 000	1 100	1 500
	320	154	120	5	1.5	1 410	2 140	144 000	218 000	990	1 300
	320	154	120	4	1.5	1 170	1 750	119 000	178 000	990	1 300
160	240	60	53	3	1	330	535	34 000	54 500	1 100	1 500
	240	75	60	3	1	430	765	44 000	78 000	1 100	1 500
	270	86	76	3	1	595	965	60 500	98 000	1 100	1 400
	270	108	86	3	1	675	1 180	69 000	120 000	1 100	1 400
	290	115	91	4	1	900	1 440	92 000	147 000	1 000	1 400
	290	178	144	4	1	1 530	2 840	156 000	290 000	1 000	1 400
	340	160	126	5	1.5	1 570	2 390	160 000	244 000	920	1 200
	340	160	126	4	1.5	1 290	1 950	132 000	199 000	920	1 200
170	260	67	60	3	1	365	620	37 000	63 500	1 100	1 400
	260	84	67	3	1	490	865	50 000	88 000	1 100	1 400
	280	88	78	3	1	550	900	56 000	92 000	1 000	1 300
	280	110	88	3	1	725	1 270	74 000	130 000	1 000	1 300
	310	125	97	5	1.5	1 050	1 690	107 000	173 000	950	1 300
	310	192	152	5	1.5	1 710	3 200	174 000	325 000	950	1 300
180	280	74	66	3	1	425	735	43 000	75 000	1 000	1 300
	280	93	74	3	1	580	1 050	59 500	107 000	1 000	1 300
	300	96	85	4	1.5	705	1 190	72 000	121 000	940	1 300
	300	120	96	4	1.5	885	1 530	90 500	156 000	940	1 300
	320	127	99	5	1.5	1 080	1 780	110 000	182 000	890	1 200
	320	192	152	5	1.5	1 760	3 350	180 000	345 000	890	1 200
190	290	75	67	3	1	430	740	44 000	75 500	940	1 300
	290	94	75	3	1	615	1 110	63 000	113 000	940	1 300
	320	104	92	4	1.5	780	1 280	79 500	131 000	890	1 200
	320	130	104	4	1.5	985	1 710	100 000	174 000	890	1 200
	340	133	105	5	1.5	1 230	2 010	125 000	205 000	840	1 100
	340	204	160	5	1.5	1 970	3 700	201 000	380 000	840	1 100
	340	204	160	4	1.5	1 710	3 350	175 000	340 000	840	1 100

1) Minimum allowable dimension for chamfer dimension r or r_1.

Note: 1. When incorporating bearings with bearing numbers marked with " ∗ ", please consult NTN Engineering.

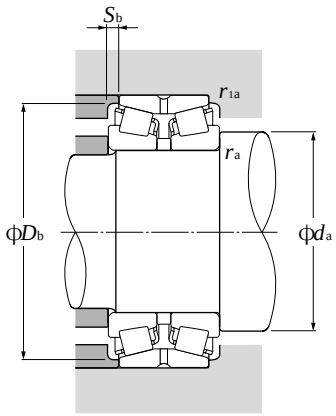

Equivalent radial load
dynamic

$P_r = XF_r + YF_a$

$\frac{F_a}{F_r} \leqq e$		$\frac{F_a}{F_r} > e$	
X	Y	X	Y
1	Y_1	0.67	Y_2

static

$P_{or} = F_r + Y_o F_a$

For values of e, Y_2 and Y_o see the table below.

Bearing numbers	Abutment and fillet dimensions mm					Load center mm	Constant	Axial load factors			Mass kg
	d_a min	D_b min	S_b min	r_{as} max	r_{1as} max	a	e	Y_1	Y_2	Y_o	(approx.)
∗ 413030	164	213	3	2.5	1	73.5	0.37	1.80	2.69	1.76	6.66
423030	164	212	7	2.5	1	79.5	0.37	1.80	2.69	1.76	8.76
413130	164	231	4.5	2.5	1	82.5	0.33	2.03	3.02	1.98	14.3
423130	164	234	10	2.5	1	96.5	0.37	1.80	2.69	1.76	18.0
430230U	168	255	11	3	1	114	0.44	1.55	2.31	1.52	24.4
432230XU	168	254	17	3	1	139	0.44	1.55	2.31	1.52	37.3
∗ 430330U	172	292	17	4	1.5	132	0.35	1.96	2.91	1.91	55.4
430330	172	292	17	4	1.5	135	0.37	1.80	2.69	1.76	52.8
413032	174	227	3.5	2.5	1	79	0.37	1.80	2.69	1.76	8.29
423032	174	227	7.5	2.5	1	85.5	0.37	1.80	2.69	1.76	10.7
413132E1	174	254	5	2.5	1	98.5	0.40	1.68	2.50	1.64	18.2
423132E1	174	250	11	2.5	1	106	0.37	1.80	2.69	1.76	22.8
430232U	178	272	12	3	1	122	0.44	1.55	2.31	1.52	31.9
432232U	178	275	17	3	1	150	0.44	1.55	2.31	1.52	46.9
∗ 430332XU	182	310	17	4	1.5	138	0.35	1.96	2.91	1.91	65.5
430332X	182	311	17	4	1.5	141	0.37	1.80	2.69	1.76	62.4
413034	184	242	3.5	2.5	1	86.5	0.37	1.80	2.69	1.76	11.6
423034	184	244	8.5	2.5	1	93.5	0.37	1.80	2.69	1.76	14.3
413134E1	184	260	5	2.5	1	104	0.40	1.68	2.50	1.64	19.5
423134E1	184	260	11	2.5	1	109	0.37	1.80	2.69	1.76	24.7
430234U	192	288	14	4	1.5	132	0.44	1.55	2.31	1.52	38.0
432234XU	192	293	20	4	1.5	160	0.44	1.55	2.31	1.52	58.2
413036E1	194	260	4	2.5	1	94	0.37	1.80	2.69	1.76	15.9
423036E1	194	262	9.5	2.5	1	102	0.37	1.80	2.69	1.76	19.0
413136E1	198	280	5.5	3	1.5	111	0.40	1.68	2.50	1.64	24.6
423136E1	198	279	12	3	1.5	119	0.37	1.80	2.69	1.76	31.4
430236U	202	297	14	4	1.5	139	0.45	1.50	2.23	1.47	39.4
432236U	202	305	20	4	1.5	165	0.45	1.50	2.23	1.47	60.6
413038E1	204	271	4	2.5	1	96	0.37	1.80	2.69	1.76	16.2
423038E1	204	272	9.5	2.5	1	104	0.37	1.80	2.69	1.76	19.6
413138	208	300	6	3	1.5	119	0.40	1.68	2.50	1.64	30.8
423138	208	299	13	3	1.5	126	0.37	1.80	2.69	1.76	38.6
430238U	212	316	14	4	1.5	141	0.44	1.55	2.31	1.52	45.4
∗ 432238U	212	323	22	4	1.5	174	0.44	1.55	2.31	1.52	73.3
432238	212	323	22	4	1.5	185	0.49	1.38	2.06	1.35	69.8

Back-to-back arrangement

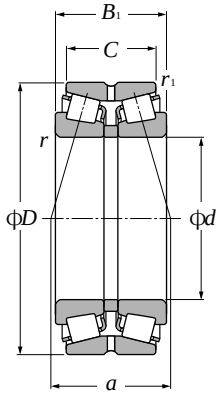

d 200～340mm

Boundary dimensions mm						Basic load ratings dynamic kN	static kN	dynamic kgf	static kgf	Limiting speeds min-1	
d	D	B_1	C	$r_{s\,min}$ 1)	$r_{1s\,min}$ 1)	C_r	C_{or}	C_r	C_{or}	grease	oil
200	310	82	73	3	1	530	940	54 000	96 000	900	1 200
	310	103	82	3	1	720	1 320	73 000	135 000	900	1 200
	340	112	100	4	1.5	965	1 660	98 500	169 000	840	1 100
	340	140	112	4	1.5	1 090	1 910	111 000	195 000	840	1 100
	360	142	110	5	1.5	1 350	2 210	137 000	226 000	800	1 100
	360	218	174	5	1.5	2 260	4 250	230 000	435 000	800	1 100
	360	218	174	4	1.5	1 980	3 950	201 000	400 000	800	1 100
220	340	90	80	4	1.5	595	1 060	61 000	108 000	810	1 100
	340	113	90	4	1.5	880	1 650	89 500	168 000	810	1 100
	370	120	107	5	1.5	1 110	1 920	113 000	196 000	760	1 000
	370	150	120	5	1.5	1 220	2 260	125 000	230 000	760	1 000
240	360	92	82	4	1.5	655	1 160	66 500	118 000	730	980
	360	115	92	4	1.5	910	1 770	92 500	181 000	730	980
	400	128	114	5	1.5	1 230	2 130	126 000	217 000	690	920
	400	160	128	5	1.5	1 400	2 600	142 000	265 000	690	920
260	400	104	92	5	1.5	840	1 540	85 500	157 000	670	900
	400	130	104	5	1.5	1 150	2 190	117 000	223 000	670	900
	440	144	128	5	1.5	1 500	2 630	152 000	268 000	630	840
	440	180	144	5	1.5	1 940	3 750	198 000	380 000	630	840
280	420	106	94	5	1.5	890	1 630	91 000	166 000	620	820
	420	133	106	5	1.5	1 200	2 340	123 000	238 000	620	820
	460	146	130	6	2	1 640	2 900	167 000	296 000	580	770
	460	183	146	6	2	1 940	3 650	198 000	375 000	580	770
300	460	118	105	5	1.5	1 070	1 990	109 000	203 000	570	760
	460	148	118	5	1.5	1 610	3 150	165 000	320 000	570	760
	500	160	142	6	2	2 010	3 600	205 000	370 000	530	710
	500	200	160	6	2	2 100	4 050	214 000	415 000	530	710
320	480	121	108	5	1.5	1 190	2 250	121 000	229 000	530	710
	480	151	121	5	1.5	1 580	3 100	162 000	315 000	530	710
	540	176	157	6	2	2 240	4 100	228 000	415 000	500	660
	540	220	176	6	2	2 500	4 900	255 000	500 000	500	660
340	520	133	118	6	2	1 480	2 870	150 000	293 000	500	660

1）Minimum allowable dimension for chamfer dimension r or r_1.
Note: 1. When incorporating bearings with bearing numbers marked with " ∗ ", please consult NTN Engineering.

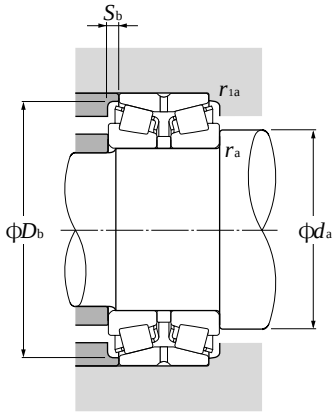

Equivalent radial load
dynamic

$P_r = XF_r + YF_a$

$\frac{F_a}{F_r} \leqq e$		$\frac{F_a}{F_r} > e$	
X	Y	X	Y
1	Y_1	0.67	Y_2

static

$P_{or} = F_r + Y_o F_a$

For values of e, Y_2 and Y_o see the table below.

Bearing numbers	Abutment and fillet dimensions mm					Load center mm	Constant	Axial load factors			Mass kg
	d_a min	D_b min	S_b min	r_{as} max	r_{1as} max	a	e	Y_1	Y_2	Y_o	(approx.)
413040E1	214	288	4.5	2.5	1	101	0.37	1.80	2.69	1.76	20.6
423040E1	214	291	10.5	2.5	1	112	0.37	1.80	2.69	1.76	25.7
413140	218	320	6	3	1.5	125	0.40	1.68	2.50	1.64	38.6
423140	218	316	14	3	1.5	134	0.37	1.80	2.69	1.76	47.5
430240U	222	336	16	4	1.5	154	0.44	1.55	2.31	1.52	62.8
∗ 432240U	222	340	22	4	1.5	180	0.41	1.66	2.47	1.62	95.2
432240	222	340	22	4	1.5	193	0.49	1.38	2.06	1.35	90.7
413044E1	238	318	5	3	1.5	112	0.37	1.80	2.69	1.76	26.7
423044E1	238	319	11.5	3	1.5	125	0.37	1.80	2.69	1.76	33.3
413144	242	346	6.5	4	1.5	135	0.40	1.68	2.50	1.64	47.8
423144	242	341	15	4	1.5	154	0.40	1.68	2.50	1.64	59.6
413048E1	258	339	5	3	1.5	117	0.37	1.80	2.69	1.76	30.2
423048E1	258	340.5	11.5	3	1.5	131	0.37	1.80	2.69	1.76	36.3
413148	262	375	7	4	1.5	144	0.40	1.68	2.50	1.64	58.9
423148	262	373	16	4	1.5	164	0.40	1.68	2.50	1.64	71.7
413052	282	372	6	4	1.5	131	0.37	1.80	2.69	1.76	41.5
423052	282	374	13	4	1.5	143	0.37	1.80	2.69	1.76	53.0
413152	282	412	8	4	1.5	161	0.40	1.68	2.50	1.64	82.2
423152	282	413	18	4	1.5	176	0.40	1.68	2.50	1.64	101
413056	302	394	6	4	1.5	136	0.37	1.80	2.69	1.76	47.2
423056	302	397	13.5	4	1.5	148	0.37	1.80	2.69	1.76	57.3
413156	308	435	8	5	2	168	0.40	1.68	2.50	1.64	87.4
423156	308	433	18.5	5	2	177	0.40	1.68	2.50	1.64	109
413060	322	428	6.5	4	1.5	151	0.37	1.80	2.69	1.76	65.6
423060	322	434	15	4	1.5	163	0.37	1.80	2.69	1.76	80.2
413160	328	471	9	5	2	182	0.40	1.68	2.50	1.64	115
423160	328	464	20	5	2	202	0.40	1.68	2.50	1.64	144
413064	342	449	6.5	4	1.5	157	0.37	1.80	2.69	1.76	70.9
423064	342	455	15	4	1.5	170	0.37	1.80	2.69	1.76	85.4
413164	348	505	9.5	5	2	197	0.40	1.68	2.50	1.64	150
423164	348	502	22	5	2	217	0.40	1.68	2.50	1.64	188
413068	368	488	7.5	5	2	170	0.37	1.8	2.69	1.76	89.2

Back-to-back arrangement

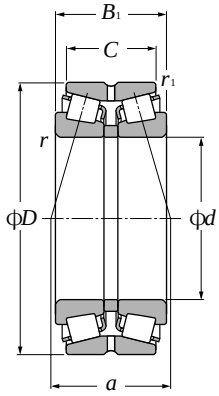

d 340～480mm

Boundary dimensions mm						Basic load ratings dynamic kN		static kN		Limiting speeds min-1	
d	D	B_1	C	$r_{s\,min}$ 1)	$r_{1s\,min}$ 1)	C_r	C_{or}	C_r	C_{or}	grease	oil
340	520	165	133	6	2	1 890	3 750	193 000	380 000	500	660
	580	190	169	6	2	2 690	4 900	274 000	500 000	460	620
	580	238	190	6	2	3 350	6 500	345 000	660 000	460	620
360	540	134	120	6	2	1 470	2 810	150 000	287 000	460	620
	540	169	134	6	2	2 050	4 200	209 000	430 000	460	620
	600	192	171	6	2	2 720	5 050	277 000	515 000	430	580
	600	240	192	6	2	3 200	6 500	325 000	660 000	430	580
380	560	135	122	6	2	1 690	3 350	172 000	340 000	440	580
	560	171	135	6	2	2 080	4 350	213 000	445 000	440	580
	620	194	173	6	2	2 840	5 250	289 000	535 000	410	540
	620	243	194	6	2	3 350	6 700	340 000	685 000	410	540
400	600	148	132	6	2	1 860	3 700	190 000	375 000	410	550
	600	185	148	6	2	2 530	5 450	258 000	555 000	410	550
	650	200	178	6	3	3 000	5 800	305 000	590 000	380	510
	650	250	200	6	3	3 750	7 850	385 000	800 000	380	510
420	620	150	134	6	2	2 110	4 250	215 000	435 000	390	520
	620	188	150	6	2	2 650	5 900	270 000	600 000	390	520
	700	224	200	6	3	3 700	7 200	375 000	735 000	360	480
	700	280	224	6	3	4 800	9 700	490 000	990 000	360	480
440	650	157	140	6	3	2 470	5 150	252 000	525 000	370	490
	650	196	157	6	3	2 600	5 450	266 000	560 000	370	490
	720	226	201	6	3	4 000	7 800	410 000	795 000	340	460
	720	283	226	6	3	5 000	10 300	510 000	1 050 000	340	460
460	680	163	145	6	3	2 600	5 350	265 000	550 000	350	470
	680	204	163	6	3	3 050	6 600	310 000	670 000	350	470
	760	240	214	7.5	4	4 550	9 150	465 000	930 000	320	430
	760	300	240	7.5	4	4 900	10 300	500 000	1 050 000	320	430
480	700	165	147	6	3	2 490	5 000	254 000	510 000	330	450
	700	206	165	6	3	3 050	6 700	310 000	685 000	330	450
	790	248	221	7.5	4	4 800	9 600	490 000	975 000	310	410
	790	310	248	7.5	4	5 300	11 100	540 000	1 130 000	310	410

1) Minimum allowable dimension for chamfer dimension r or r_1.

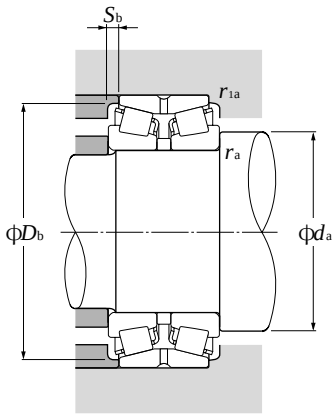

Equivalent radial load
dynamic

$P_r = XF_r + YF_a$

$\frac{F_a}{F_r} \leqq e$		$\frac{F_a}{F_r} > e$	
X	Y	X	Y
1	Y_1	0.67	Y_2

static

$P_{or} = F_r + Y_o F_a$

For values of e, Y_2 and Y_o see the table below.

Bearing numbers	Abutment and fillet dimensions mm					Load center mm	Constant	Axial load factors			Mass kg
	d_a min	D_b min	S_b min	r_{as} max	r_{1as} max	a	e	Y_1	Y_2	Y_o	(approx.)
423068	368	489	16	5	2	184	0.37	1.80	2.69	1.76	113
413168	368	548	10.5	5	2	213	0.40	1.68	2.50	1.64	188
423168	368	542	24	5	2	237	0.40	1.68	2.50	1.64	235
413072	388	507	7	5	2	176	0.37	1.80	2.69	1.76	92.7
423072	388	509	17.5	5	2	192	0.37	1.80	2.69	1.76	120
413172	388	561	10.5	5	2	219	0.40	1.68	2.50	1.64	199
423172	388	560	24	5	2	240	0.40	1.68	2.50	1.64	248
413076	408	528	6.5	5	2	183	0.37	1.80	2.69	1.76	95.9
423076	408	529	18	5	2	196	0.37	1.80	2.69	1.76	126
413176	408	583	10.5	5	2	225	0.40	1.68	2.50	1.64	210
423176	408	578	24.5	5	2	249	0.40	1.68	2.50	1.64	262
413080	428	564	8	5	2	194	0.37	1.80	2.69	1.76	105
423080	428	564	18.5	5	2	210	0.37	1.80	2.69	1.76	163
413180	428	610	11	5	2.5	232	0.40	1.68	2.50	1.64	236
423180	428	610	25	5	2.5	256	0.40	1.68	2.50	1.64	294
413084	448	586	8	5	2	200	0.37	1.80	2.69	1.76	135
423084	448	583	19	5	2	220	0.37	1.80	2.69	1.76	172
413184	448	655	12	5	2.5	258	0.40	1.68	2.50	1.64	317
423184	448	659	28	5	2.5	287	0.40	1.68	2.50	1.64	394
413088	468	614	8.5	5	2.5	208	0.37	1.80	2.69	1.76	160
423088	468	614	19.5	5	2.5	229	0.37	1.80	2.69	1.76	198
413188	468	675	12.5	5	2.5	263	0.40	1.68	2.50	1.64	330
423188	468	678	28.5	5	2.5	288	0.40	1.68	2.50	1.64	412
413092	488	646	9	5	2.5	217	0.37	1.80	2.69	1.76	179
423092	488	644	20.5	5	2.5	239	0.37	1.80	2.69	1.76	225
413192	496	714	13	6	3	276	0.40	1.68	2.50	1.64	395
423192	496	712	30	6	3	305	0.40	1.68	2.50	1.64	493
413096	508	665	9	5	2.5	223	0.37	1.80	2.69	1.76	189
423096	508	664	20.5	5	2.5	246	0.37	1.80	2.69	1.76	236
413196	516	743	13.5	6	3	281	0.40	1.68	2.50	1.64	442
423196	516	738	31	6	3	329	0.40	1.68	2.50	1.64	548

Back-to-back arrangement

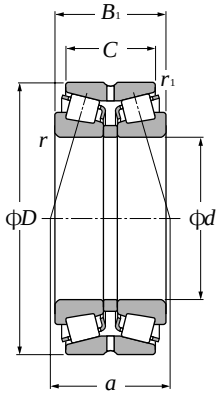

d 500mm

Boundary dimensions mm						Basic load ratings dynamic kN	static kN	dynamic kgf	static kgf	Limiting speeds min-1	
d	D	B_1	C	$r_{s\,min}$ 1)	$r_{1s\,min}$ 1)	C_r	C_{or}	C_r	C_{or}	grease	oil
500	720	167	149	6	3	2 610	5 400	266 000	550 000	320	420
	720	209	167	6	3	3 050	6 900	315 000	700 000	320	420
	830	264	235	7.5	4	5 200	10 500	530 000	1 070 000	290	390
	830	330	264	7.5	4	6 400	14 000	650 000	1 420 000	290	390

1) Minimum allowable dimension for chamfer dimension r or r_1.

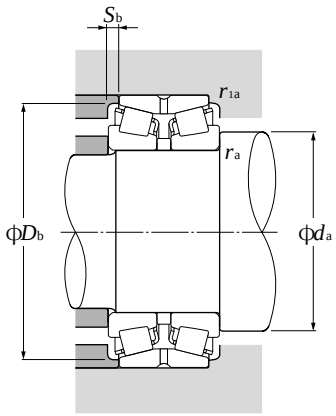

Equivalent radial load

dynamic

$P_r = XF_r + YF_a$

$\frac{F_a}{F_r} \leqq e$		$\frac{F_a}{F_r} > e$	
X	Y	X	Y
1	Y_1	0.67	Y_2

static

$P_{or} = F_r + Y_o F_a$

For values of e, Y_2 and Y_o see the table below.

Bearing numbers	Abutment and fillet dimensions mm					Load center mm	Constant	Axial load factors			Mass kg
	d_a min	D_b min	S_b min	r_{as} max	r_{1as} max	a	e	Y_1	Y_2	Y_o	(approx.)
4130/500	528	686	9	5	2.5	230	0.37	1.80	2.69	1.76	202
4230/500	528	683	21	5	2.5	250	0.37	1.80	2.69	1.76	247
4131/500	536	780	14.5	6	3	296	0.40	1.68	2.50	1.64	528
5E-4231/500G2	536	773	33	6	3	331	0.40	1.68	2.50	1.64	678

Face-to-face arrangement

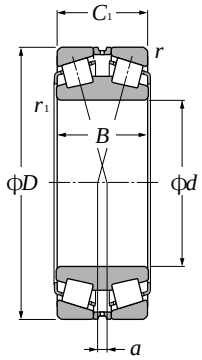

d 110～280mm

Boundary dimensions mm						Basic load ratings dynamic kN		Basic load ratings static kgf		Limiting speeds min-1	
d	D	B	C1	r1s min 1)	rs min 1)	Cr	Cor	Cr	Cor	grease	oil
110	180	56	56	2.5	2	298	485	30 500	49 500	1 600	2 200
120	180	46	46	2.5	2	230	375	23 500	38 000	1 500	2 100
	200	62	62	2.5	2	370	610	38 000	62 500	1 500	2 000
130	200	52	52	2.5	2	294	490	29 900	50 000	1 400	1 900
	210	64	64	2.5	2	410	675	42 000	69 000	1 400	1 800
140	210	53	53	2.5	2	300	535	30 500	54 500	1 300	1 800
	225	68	68	3	2.5	390	650	40 000	66 000	1 200	1 700
150	225	56	56	3	2.5	355	630	36 000	64 500	1 200	1 600
	250	80	80	3	2.5	600	1 040	61 500	106 000	1 200	1 500
160	240	60	60	3	2.5	430	765	44 000	78 000	1 100	1 500
	270	86	86	3	2.5	675	1 180	69 000	120 000	1 100	1 400
170	260	67	67	3	2.5	490	865	50 000	88 000	1 100	1 400
	280	88	88	3	2.5	725	1 270	74 000	130 000	1 000	1 300
180	280	74	74	3	2.5	580	1 050	59 500	107 000	1 000	1 300
	300	96	96	4	3	885	1 530	90 500	156 000	940	1 300
190	290	75	75	3	2.5	615	1 110	63 000	113 000	940	1 300
	320	104	104	4	3	985	1 710	100 000	174 000	890	1 200
200	310	82	82	3	2.5	720	1 320	73 000	135 000	900	1 200
	340	112	112	4	3	1 090	1 910	111 000	195 000	840	1 100
220	340	90	90	4	3	880	1 650	89 500	168 000	810	1 100
	370	120	120	5	4	1 220	2 260	125 000	230 000	760	1 000
240	360	92	92	4	3	910	1 770	92 500	181 000	730	980
	400	128	128	5	4	1 400	2 600	142 000	265 000	690	920
260	400	104	104	5	4	1 150	2 190	117 000	223 000	670	900
	440	144	144	5	4	1 960	3 750	200 000	380 000	630	840
280	420	106	106	5	4	1 200	2 340	123 000	238 000	620	820

1) Minimum allowable dimension for chamfer dimension r or r_1.

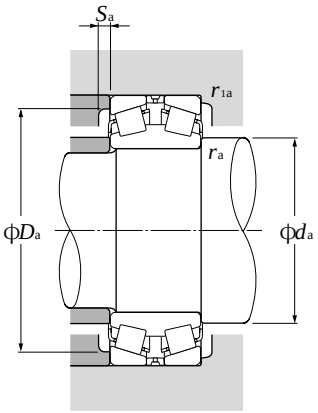

Equivalent radial load

dynamic

$P_r = XF_r + YF_a$

$\frac{F_a}{F_r} \leqq e$		$\frac{F_a}{F_r} > e$	
X	Y	X	Y
1	Y_1	0.67	Y_2

static

$P_{or} = F_r + Y_o F_a$

For values of e, Y_2 and Y_o see the table below.

Bearing numbers	Abutment and fillet dimensions mm						Load center mm	Constant	Axial load factors			Mass kg
	d_a max	D_a max	D_a min	S_a min	r_{1as} max	r_{as} max	a	e	Y_1	Y_2	Y_o	(approx.)
323122	124	170	160	8	2	2	1	0.33	2.03	3.02	1.98	5.6
323024	134	170	164	8	2	2	12	0.37	1.80	2.69	1.76	4.08
323124	134	190	175	8	2	2	6.5	0.37	1.80	2.69	1.76	7.82
323026	144	190	184	8	2	2	13.5	0.37	1.80	2.69	1.76	5.92
323126	144	200	185	8	2	2	7.5	0.37	1.80	2.69	1.76	8.58
323028	155	200	190	8	2	2	10	0.37	1.84	2.74	1.80	6.4
323128	156	213	200	10	2.5	2	8	0.37	1.80	2.69	1.76	10.7
323030	165	213	205	10	2.5	2	15.5	0.37	1.80	2.69	1.76	7.76
323130	168	238	220	10	2.5	2	6.5	0.37	1.80	2.69	1.76	15.7
323032	175	228	215	10	2.5	2	17.5	0.37	1.80	2.69	1.76	9.46
323132E1	178	258	240	10	2.5	2	8	0.37	1.80	2.69	1.76	20
323034	185	248	235	10	2.5	2	18	0.37	1.80	2.69	1.76	12.8
323134E1	188	268	250	10	2.5	2	8.5	0.37	1.80	2.69	1.76	21.5
323036E1	198	268	250	10	2.5	2	17	0.37	1.80	2.69	1.76	16.5
323136E1	200	286	265	12	3	2.5	8	0.37	1.80	2.69	1.76	27.2
323038E1	208	278	260	12	2.5	2	17.5	0.37	1.80	2.69	1.76	17.9
323138	212	306	285	12	3	2.5	8.5	0.37	1.80	2.69	1.76	34
323040E1	218	298	280	12	2.5	2	19	0.37	1.80	2.69	1.76	21.7
323140	222	326	300	12	3	2.5	8.5	0.37	1.80	2.69	1.76	41.7
323044E1	242	326	310	12	3	2.5	21.5	0.37	1.80	2.69	1.76	29.8
323144	248	352	325	14	4	3	14	0.40	1.68	2.50	1.64	52.2
323048E1	269	346	321.5	14	3	2.5	25.5	0.37	1.80	2.69	1.76	32.6
323148	268	382	355	14	4	3	17	0.40	1.68	2.50	1.64	64.6
323052	285	382	365	14	4	3	25	0.37	1.80	2.69	1.76	47.3
323152	290	422	385	16	4	3	16.5	0.40	1.68	2.50	1.64	90
323056	305	402	385	16	4	3	29.5	0.37	1.80	2.69	1.76	51.2

Face-to-face arrangement

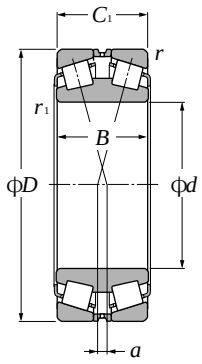

d 280～500mm

	Boundary dimensions mm					Basic load ratings dynamic kN		dynamic kgf	static	Limiting speeds min^{-1}	
d	D	B	C_1	$r_{1s\ min}$ 1)	$r_{s\ min}$ 1)	C_r	C_{or}	C_r	C_{or}	grease	oil
280	460	146	146	6	5	1 940	3 650	198 000	375 000	580	770
300	460	118	118	5	4	1 610	3 150	165 000	320 000	570	760
	500	160	160	6	5	2 100	4 050	214 000	415 000	530	710
320	480	121	121	5	4	1 580	3 100	162 000	315 000	530	710
	540	176	176	6	5	2 500	4 900	255 000	500 000	500	660
340	520	133	133	6	5	1 890	3 750	193 000	380 000	500	660
	580	190	190	6	5	3 350	6 500	345 000	660 000	460	620
360	540	134	134	6	5	2 050	4 200	209 000	430 000	460	620
	600	192	192	6	5	3 200	6 500	325 000	660 000	430	580
380	560	135	135	6	5	2 080	4 350	213 000	445 000	440	580
	620	194	194	6	5	3 350	6 700	340 000	685 000	410	540
400	600	148	148	6	5	2 530	5 450	258 000	555 000	410	550
	650	200	200	6	6	3 750	7 850	385 000	800 000	380	510
420	620	150	150	6	5	2 650	5 900	270 000	600 000	390	520
	700	224	224	6	6	4 800	9 700	490 000	990 000	360	480
440	650	157	157	6	6	2 600	5 450	266 000	560 000	370	490
	720	226	226	6	6	5 000	10 300	510 000	1 050 000	340	460
460	680	163	163	6	6	3 050	6 600	310 000	670 000	350	470
	760	240	240	7.5	7.5	4 900	10 300	500 000	1 050 000	320	430
480	700	165	165	6	6	3 050	6 700	310 000	685 000	330	450
	790	248	248	7.5	7.5	5 300	11 100	540 000	1 130 000	310	410
500	720	167	167	6	6	3 050	6 900	315 000	700 000	320	420
	830	264	264	7.5	7.5	6 400	14 000	650 000	1 420 000	290	390

1) Minimum allowable dimension for chamfer dimension r or r_1.

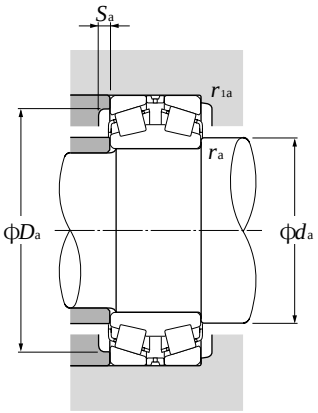

Equivalent radial load
dynamic

$P_r = XF_r + YF_a$

$\frac{F_a}{F_r} \leqq e$		$\frac{F_a}{F_r} > e$	
X	Y	X	Y
1	Y_1	0.67	Y_2

static

$P_{or} = F_r + Y_o F_a$

For values of e, Y_2 and Y_o see the table below.

Bearing numbers	Abutment and fillet dimensions mm						Load center mm	Constant	Axial load factors			Mass kg
	d_a max	D_a max	min	S_a min	r_{1as} max	r_{as} max	a	e	Y_1	Y_2	Y_o	(approx.)
323156	315	438	400	16	5	4	16	0.40	1.68	2.50	1.64	95.8
323060	330	442	425	16	4	3	31	0.37	1.80	2.69	1.76	70.7
323160	335	478	440	16	5	4	18	0.40	1.68	2.50	1.64	126
323064	350	462	440	16	4	3	34	0.37	1.80	2.69	1.76	76.3
323164	355	518	480	18	5	4	18.5	0.40	1.68	2.50	1.64	164
323068	370	498	480	18	5	4	36	0.37	1.80	2.69	1.76	101
323168	380	558	515	18	5	4	35.5	0.40	1.68	2.50	1.64	207
323072	395	518	495	18	5	4	41	0.37	1.80	2.69	1.76	107
323172	400	578	535	18	5	4	25.5	0.40	1.68	2.50	1.64	218
323076	415	538	515	18	5	4	44.5	0.37	1.80	2.69	1.76	113
323176	420	598	550	20	5	4	29	0.40	1.68	2.50	1.64	229
323080	440	578	550	18	5	4	45	0.37	1.80	2.69	1.76	146
323180	445	622	580	20	5	5	32.5	0.40	1.68	2.50	1.64	259
323084	460	598	570	20	5	4	48.5	0.37	1.80	2.69	1.76	154
323184	465	672	625	25	5	5	60	0.40	1.68	2.50	1.64	346
323088	480	622	600	20	5	5	53.5	0.37	1.80	2.69	1.76	177
323188	485	692	645	25	5	5	44	0.40	1.68	2.50	1.64	361
323092	500	652	620	25	5	5	56.5	0.37	1.80	2.69	1.76	201
323192	510	724	680	25	6	6	34.5	0.40	1.68	2.50	1.64	433
323096	520	672	640	25	5	5	63	0.37	1.80	2.69	1.76	211
323196	530	754	705	30	6	6	36	0.40	1.68	2.50	1.64	481
3230/500	540	692	655	25	5	5	61.5	0.37	1.80	2.69	1.76	221
5E-3231/500G2	550	794	740	30	6	6	37.5	0.40	1.68	2.50	1.64	570

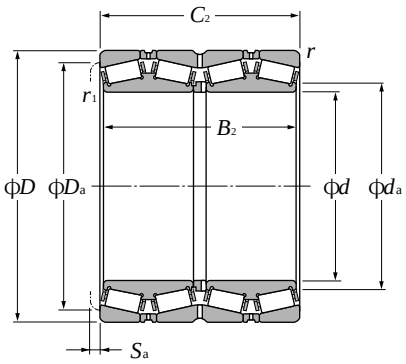

d 120～187.325mm

d	Boundary dimensions mm D	B2	C2	r1s min 1)	rs min 1)	Basic load ratings dynamic kN Cr	static Cor	dynamic kgf Cr	static Cor
120	170	124	124	2.5	2	390	1 020	40 000	104 000
	210	174	174	2.5	2.5	855	1 710	87 500	174 000
120.650	174.625	141.288	139.703	0.8	1.5	510	1 220	52 000	124 000
127	182.562	158.750	158.750	1.5	3.3	660	1 730	67 000	177 000
130	184	134	134	2.5	2	480	1 190	49 000	122 000
135	180	160	160	1	2	500	1 360	51 000	138 000
136.525	190.500	161.925	161.925	1.5	3.3	695	1 900	71 000	193 000
139.700	200.025	157.165	160.340	0.8	3.3	700	1 950	71 500	199 000
140	198	144	144	2.5	2	575	1 460	58 500	149 000
146.050	244.475	192.088	187.325	1.5	3.3	955	1 980	97 000	202 000
150	212	155	155	3	2.5	660	1 700	67 500	173 000
152.400	222.250	174.625	174.625	1.5	1.5	930	2 350	94 500	239 000
160	226	165	165	3	2.5	775	2 030	79 000	207 000
	265	173	173	2.5	2.5	1 100	2 270	112 000	231 000
165.100	225.425	165.100	168.275	0.8	3.3	745	2 220	76 000	226 000
170	240	175	175	3	2.5	835	2 200	85 500	224 000
	280	181	181	2.5	2.5	1 150	2 420	117 000	247 000
177.800	247.650	192.088	192.088	1.5	3.3	1 000	2 760	102 000	281 000
	279.400	234.950	234.947	1.5	3.3	1 420	3 400	145 000	345 000
	304.800	238.227	233.365	3.3	3.3	1 580	3 100	161 000	320 000
180	254	185	185	3	2.5	910	2 390	93 000	244 000
	300	280	280	3	3	2 160	4 800	220 000	490 000
187.325	269.875	211.138	211.138	1.5	3.3	1 240	3 400	127 000	345 000

1) Minimum allowable dimension for chamfer dimension r or r_1.

Bearing numbers	Abutment and fillet dimensions mm			Mass kg
	d_a	D_a	S_a	(approx.)
E-625924	135	155.5	5	8.97
E-CRO-2418	140	190	4.5	22.2
∗ E-M224749D/M224710/M224710D	129	163	3	11.5
∗ T-E-48290D/48220/48220D	137	168	4.5	14.3
E-625926	144.5	169	5	11.3
E-CRO-2701	143	165	2	13.5
∗ T-E-48393D/48320/48320D	144	177	4	14.8
∗ T-E-48680D/48620/48620D	150	185	3	17.3
E-625928	156	183	5	14
∗ E-81576D/81962/81963D	163	225	6.5	36.8
E-625930	167.5	195	5.5	16.9
∗ T-E-M231649D/M231610/M231610D	165	207	4	24.7
E-625932	177.5	208.5	5.5	20.2
E-CRO-3209	184	247	4.5	33.6
∗ T-E-46791D/46720/46721D	175	209	3	20.7
E-625934	187.5	220	5.5	24.4
E-CRO-3409	192	255	5	44
∗ E-67791D/67720/67721D	190	229	5	29.4
∗ E-82681D/82620/82620D	195	251	5	55.3
∗ E-EE280700D/281200/281201D	198	279	7	69.9
E-625936	200.5	233.5	5.5	28.9
E-CRO-3617	201	274	5	69.4
∗ E-M238849D/M238810/M238810D	199.9	250	4	41.8

Note: 1. Bearing numbers marked " ∗ " designate inch series bearings.

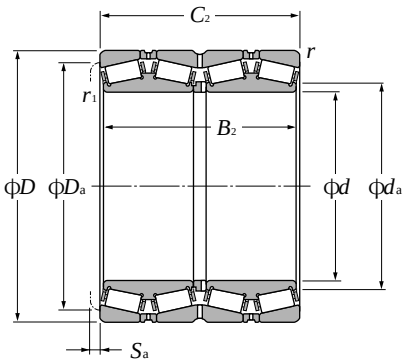

d 190～260mm

Boundary dimensions mm						Basic load ratings dynamic kN	static kN	dynamic kgf	static kgf
d	D	B_2	C_2	$r_{1s\,min}$ 1)	$r_{s\,min}$ 1)	C_r	C_{or}	C_r	C_{or}
190	268	196	196	3	2.5	1 060	2 850	108 000	291 000
	270	190	190	2.5	2.5	1 080	2 940	111 000	300 000
	292.100	225.425	225.425	1.5	3.3	1 570	4 150	160 000	425 000
190.500	266.700	187.325	188.912	1.5	3.3	1 040	2 990	106 000	305 000
200	282	206	206	3	2.5	1 200	3 300	122 000	335 000
	290	160	160	2.5	2.5	925	2 210	94 500	226 000
	310	200	200	3	3	1 360	2 980	138 000	305 000
203.200	317.500	215.900	209.550	3.3	3.3	1 270	2 820	129 000	288 000
215.900	288.925	177.800	177.800	0.8	3.3	1 090	3 100	111 000	315 000
220	310	226	226	4	3	1 380	3 800	141 000	385 000
220.662	314.325	239.712	239.712	1.5	3.3	1 840	4 900	187 000	500 000
228.600	425.450	349.250	361.950	3.5	6.4	3 450	8 250	355 000	845 000
234.950	327.025	196.850	196.850	1.5	3.3	1 370	3 700	140 000	380 000
240	338	248	248	4	3	1 870	4 950	191 000	505 000
241.478	350.838	228.600	228.600	1.5	3.3	1 770	4 550	180 000	465 000
244.475	327.025	193.675	193.675	1.5	3.3	1 430	4 100	146 000	415 000
	381.000	304.800	304.800	3.3	4.8	2 220	5 750	227 000	590 000
250	365	270	270	1.5	3	2 150	6 150	219 000	630 000
	370	220	220	4	4	2 050	5 750	209 000	590 000
254	358.775	269.875	269.875	3.3	3.3	2 390	6 550	244 000	670 000
	368.300	204.622	204.470	1.5	3.3	1 350	3 250	138 000	330 000
	444.500	279.400	279.400	3.3	6.4	2 890	5 900	294 000	600 000
260	368	268	268	5	4	1 990	5 700	203 000	580 000
	400	255	255	4	7.5	2 210	5 300	225 000	540 000

1) Minimum allowable dimension for chamfer dimension r or r_1.

Bearing numbers	Abutment and fillet dimensions mm			Mass kg
	d_a	D_a	S_a	(approx.)
E-625938	209	245.5	6	34.7
E-CRO-3812	205	250	6	34.7
∗ E-M241538D/M241510/M241510D	222	271	5	59.6
∗ T-E-67885D/67820/67820D	204	246	3	33.6
E-625940	219.5	258	6	40.5
E-CRO-4013	221	271	5	35.1
E-CRO-4014	222	284	6	48.4
∗ E-EE132082D/132125/132126D	224	294	9.5	62.5
∗ E-LM742749D/LM742714/LM742714D	227	267	5	34.3
E-625944	242	284.5	6	53.5
∗ T-E-M244249D/M244210/M244210D	235	293	4	60.2
∗ E-EE700090D/700167/700168D	263	381	3	232
∗ T-E-8576D/8520/8520D	250	305	5	53.6
E-625948A	260.5	312	6	70
∗ E-EE127097D/127137/127137D	262	325	6.5	76.4
∗ E-LM247748D/LM247710/LM247710DA	257	310	5	46.1
∗ E-EE126096D/126150/126151D	262	343	6.5	132
E-CRO-5004	275	339	5	82.1
E-CRO-5001	276	344	6	87
∗ T-E-M249748D/M249710/M249710D	272.5	335	5	85.6
∗ E-EE171000D/171450/171451D	269	340	6	71.8
∗ E-EE822101D/822175/822176D	289	406	8	185
E-625952	287	338.5	6	90.3
E-CRO-5215	290	359	8	106

Note: 1. Bearing numbers marked " ∗ " designate inch series bearings.

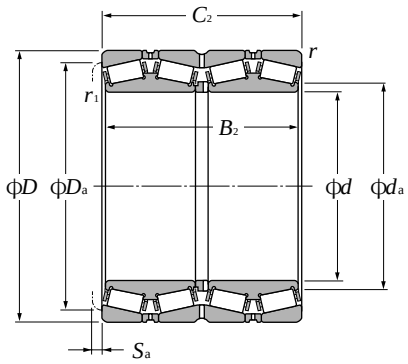

d 260.350～304.800mm

d	Boundary dimensions mm D	B2	C2	r1s min 1)	rs min 1)	Basic load ratings dynamic kN Cr	static Cor	dynamic kgf Cr	static Cor
260.350	365.125	228.600	228.600	3.3	6.4	1 750	4 550	178 000	465 000
	400.050	255.588	253.995	1.5	6.4	2 090	4 950	213 000	505 000
	422.275	314.325	317.500	6.4	3.3	2 980	7 100	305 000	725 000
266.700	355.600	230.188	228.600	1.5	3.3	1 840	5 350	188 000	545 000
	393.700	269.878	269.878	3.3	6.4	2 110	6 000	216 000	610 000
269.875	381.000	282.575	282.575	3.3	3.3	2 470	6 850	252 000	700 000
270	410	222	222	4	4	1 910	4 550	195 000	465 000
275	385	200	200	3	3	1 610	4 250	165 000	435 000
276.225	406.400	268.290	260.355	1.5	6.4	2 110	6 000	216 000	610 000
279.400	469.900	346.075	349.250	6.4	3.3	3 500	8 700	355 000	885 000
279.578	380.898	244.475	244.475	1.5	3.3	1 950	6 200	199 000	635 000
280	395	288	288	5	4	2 560	7 100	261 000	725 000
285.750	380.898	244.475	244.475	1.5	3.3	1 950	6 200	199 000	635 000
288.925	406.400	298.450	298.450	3.3	3.3	2 980	8 300	305 000	850 000
292.100	476.250	296.047	292.100	1.5	3.3	3 050	6 800	310 000	695 000
300	424	310	310	5	4	2 570	7 450	262 000	760 000
	460	360	360	4	4	4 050	10 100	415 000	1 030 000
	470	270	270	4	4	3 200	7 250	325 000	740 000
	470	292	292	4	4	3 500	8 300	360 000	845 000
300.038	422.275	311.150	311.150	3.3	3.3	3 350	9 600	340 000	980 000
304.648	438.048	279.400	279.400	3.3	3.3	2 470	6 500	252 000	665 000
	438.048	280.990	279.400	3.3	4.8	2 630	6 900	268 000	700 000
304.800	419.100	269.875	269.875	1.5	6.4	2 390	6 850	244 000	695 000
	444.500	247.650	241.300	8	1.5	1 850	4 600	188 000	470 000

1) Minimum allowable dimension for chamfer dimension r or r_1.

Bearing numbers	Abutment and fillet dimensions mm			Mass kg
	d_a	D_a	S_a	(approx.)
∗ E-EE134102D/134143/134144D	282	340	6.5	76.5
∗ E-EE221027D/221575/221576D	292	367	8	117
∗ E-HM252349D/HM252310/HM252310D	290	392	5.5	180
∗ T-E-LM451349D/LM451310/LM451310D	281	335	6.5	62
∗ E-EE275106D/275155/275156D	292	367	5	116
∗ E-M252349D/M252310/M252310D	290	356	6	97.5
E-CRO-5403	305	382	6	91
E-CRO-5501	300	355	6	62.5
∗ E-EE275109D/275160/275161D	293.6	366	8	122
∗ E-EE722111D/722185/722186D	316	432	5	258
∗ T-E-LM654644D/LM654610/LM654610D	297	356	5	83.2
E-625956	304.5	363.5	7	111
∗ T-E-LM654648D/LM654610/LM654610D	302	356	5	77.9
∗ E-M255449D/M255410/M255410D	310	379	5	125
∗ E-EE921150D/921875/921876D	321	441	7	208
E-625960	329	389.5	7	138
E-CRO-6015	330	427	10	180
☆ E-CRO-6012	338	438	7	152
☆ E-CRO-6013	336	437	7	164
☆∗ T-E-HM256849D/HM256810/HM256810DG2	322	394	6	143
∗ E-EE329119D/329172/329173D	328	409	8	143
∗ E-M757448D/M757410/M757410D	328	407	7	140
∗ E-M257149D/M257110/M257110D	322	392	5	115
∗ E-EE291202D/291750/291751D	328	416	9.5	127

Note: 1. Bearing numbers marked " ∗ " designate inch series bearings.
2. Bearing numbers marked " ☆ " designate bearing with hollow rollers and pin type cages.

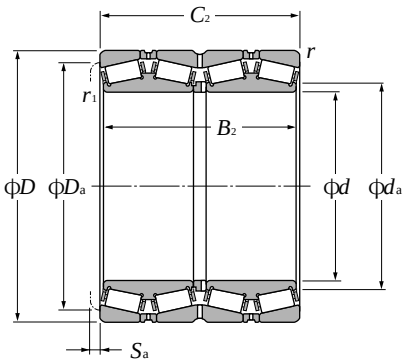

d 304.800～360mm

Boundary dimensions mm						Basic load ratings dynamic kN	static kN	dynamic kgf	static kgf
d	D	B_2	C_2	$r_{1s\,min}$ 1)	$r_{s\,min}$ 1)	C_r	C_{or}	C_r	C_{or}
304.800	495.300	342.900	349.250	3.3	6.4	3 650	9 400	370 000	960 000
304.902	412.648	266.700	266.700	3.3	3.3	2 610	7 450	267 000	760 000
305.003	438.048	280.990	279.400	3.3	4.8	2 630	6 900	268 000	700 000
317.500	422.275	269.875	269.875	1.5	3.3	2 260	7 050	231 000	715 000
	447.675	327.025	327.025	3.3	3.3	3 400	9 550	345 000	975 000
320	460	338	338	5	4	2 940	8 650	300 000	880 000
330	470	340	340	2.5	2.5	3 150	10 200	320 000	1 040 000
	510	340	340	6	6	3 900	9 650	395 000	985 000
330.200	482.600	306.388	311.150	1.5	3.3	2 810	7 900	287 000	805 000
333.375	469.900	342.900	342.900	3.3	3.3	4 000	11 000	405 000	1 130 000
340	480	350	350	6	5	3 450	10 400	350 000	1 060 000
341.312	457.098	254.000	254.000	1.5	3.3	2 370	6 900	241 000	705 000
342.900	533.400	307.985	301.625	3.3	3.3	3 150	6 900	320 000	705 000
343.052	457.098	254.000	254.000	1.5	3.3	2 370	6 900	241 000	705 000
346.075	488.950	358.775	358.775	3.3	3.3	4 350	12 800	445 000	1 300 000
347.662	469.900	292.100	292.100	3.3	3.3	3 200	9 100	325 000	925 000
355	490	316	316	1.5	3.3	3 500	10 000	355 000	1 020 000
355.600	444.500	241.300	241.300	1.5	3.3	1 760	6 200	180 000	635 000
	457.200	252.412	252.412	1.5	3.3	2 470	7 850	251 000	800 000
	482.600	265.112	269.875	1.5	3.3	2 790	7 650	285 000	780 000
	488.950	317.500	317.500	1.5	3.3	3 500	10 000	355 000	1 020 000
360	508	370	370	6	5	3 700	11 200	380 000	1 140 000
	600	540	540	5	5	6 700	18 100	685 000	1 840 000

1) Minimum allowable dimension for chamfer dimension r or r_1.

Bearing numbers	Abutment and fillet dimensions mm			Mass kg
	d_a	D_a	S_a	(approx.)
∗ E-EE724121D/724195/724196D	330	450	3	273
∗ E-M257248D/M257210/M257210D	325	388	5	107
∗ E-M757449D/M757410/M757410D	328	407	7	139
∗ E-LM258649D/LM258610/LM258610D ∗ T-E-HM259049D/HM259010/HM259010D	333.3 339.6	398 418	7 5	110 161
E-625964	355	420.5	7	183
E-CRO-6604 E-CRO-6602	366 366	440 469	5.5 5	141 221
∗ E-EE526131D/526190/526191D	351	448	3	197
∗ E-HM261049D/HM261010/HM261010D	357	439	5	187
E-625968	373	440	7	200
∗ E-LM761648D/LM761610/LM761610D	359	432	5	125
∗ E-EE971355D/972100/972103D	378	502	11	252
∗ E-LM761649D/LM761610/LM761610D	361	432	5	117
☆∗ T-E-HM262749D/HM262710/HM262710DG2	371	456	6	227
∗ E-M262449D/M262410/M262410D	369	443	8	148
E-CRO-7105	378	450	7	170
∗ E-L163149D/L163110/L163110D ∗ E-LM263149D/LM263110/LM263110D ∗ E-LM763449D/LM763410/LM763410D ∗ E-M263349D/M263310/M263310D	370 372 375 374	422 434 453 459	6.5 6 3 5	89.5 106 145 173
E-625972 E-CRO-7210	394 400	466.5 550	7 8	236 520

Note: 1. Bearing numbers marked " ∗ " designate inch series bearings.
2. Bearing numbers marked " ☆ " designate bearing with hollow rollers and pin type cages.

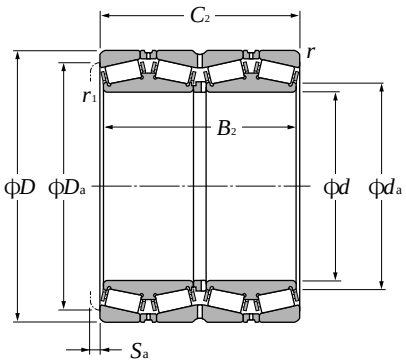

d 368.300～447.675mm

Boundary dimensions mm						Basic load ratings dynamic kN	static kN	dynamic kgf	static kgf
d	D	B2	C2	r1s min 1)	rs min 1)	Cr	Cor	Cr	Cor
368.300	523.875	382.588	382.588	3.3	6.4	4 450	13 100	455 000	1 330 000
374.650	501.650	250.825	260.350	1.5	3.3	2 360	6 250	241 000	640 000
380	536	390	390	6	5	4 900	14 100	500 000	1 440 000
	560	285	285	5	5	3 250	7 700	330 000	785 000
384.175	546.100	400.050	400.050	3.3	6.4	5 400	16 100	560 000	1 640 000
385.762	514.350	317.500	317.500	3.3	3.3	3 650	11 100	370 000	1 130 000
393.700	546.100	288.925	288.925	1.5	6.4	3 200	10 200	325 000	1 040 000
395	545	268.7	288.7	4	7.5	2 970	8 650	305 000	880 000
400	560	380	380	5	5	4 800	14 100	490 000	1 440 000
	564	412	412	6	5	4 850	14 700	495 000	1 500 000
406.400	546.100	288.925	288.925	1.5	6.4	3 200	10 200	325 000	1 040 000
	590.550	400.050	400.050	3.3	6.4	4 850	13 600	490 000	1 380 000
	609.600	309.562	317.500	3.5	6.4	3 700	9 600	380 000	980 000
409.575	546.100	334.962	334.962	1.5	6.4	4 100	12 700	415 000	1 290 000
415.925	590.550	434.975	434.975	3.3	6.4	6 300	18 900	640 000	1 930 000
420	592	432	432	6	5	5 350	16 300	545 000	1 660 000
	650	460	460	5	5	6 950	18 300	710 000	1 870 000
431.800	571.500	279.400	279.400	1.5	3.3	3 100	9 300	315 000	950 000
	571.500	336.550	336.550	1.5	6.4	3 700	11 800	380 000	1 200 000
432.003	609.524	317.500	317.500	3.5	6.4	4 350	11 500	445 000	1 170 000
440	620	454	454	6	6	6 500	19 900	665 000	2 030 000
	650	355	355	4	7.5	5 350	13 400	545 000	1 370 000
	650	460	460	6	6	6 750	20 700	690 000	2 110 000
447.675	635.000	463.550	463.550	3.3	6.4	7 100	22 100	725 000	2 260 000

1) Minimum allowable dimension for chamfer dimension r or r_1.

Bearing numbers	Abutment and fillet dimensions mm			Mass kg
	d_a	D_a	S_a	(approx.)
☆∗ E-HM265049D/HM265010/HM265010DG2	393.7	487	6	280
∗ E-LM765149D/LM765110/LM765110D	393	472	2	145
E-625976	410	495	8	277
E-CRO-7612	417	525	7	208
☆∗ T-E-HM266449D/HM266410/HM266410DG2	411	507	6.5	312
∗ E-LM665949D/LM665910/LM665910D	409	482	7	240
∗ E-LM767745D/LM767710/LM767710D	418	510	6.5	219
E-CRO-7901	434	508	3	200
☆ E-CRO-8005	426	510	8	300
E-625980	434	518.5	7	324
∗ E-LM767749D/LM767710/LM767710D	427	510	6.5	201
∗ E-EE833161D/833232/833233D	448	549	6.5	395
∗ E-EE911603D/912400/912401D	441	568	1.5	332
☆∗ E-M667947D/M667911/M667911DG2	431	510	5.5	226
☆∗ T-E-M268749D/M268710/M268710DG2	444	549	9	396
E-625984	457	545	7	374
E-CRO-8402	455	593	8	600
∗ E-LM869449D/LM869410/LM869410D	453	537	8	198
∗ E-LM769349D/LM769310/LM769310D	453	534	6.5	232
∗ E-EE736173D/736238/736239D	464	572	6.5	297
E-625988	479	572.5	8	430
☆ E-CRO-8807	484	607	9	400
E-CRO-8806	483	595	11	600
☆∗ E-M270749D/M270710/M270710DAG2	478	591	8	509

Note: 1. Bearing numbers marked " ∗ " designate inch series bearings.
2. Bearing numbers marked " ☆ " designate bearing with hollow rollers and pin type cages.

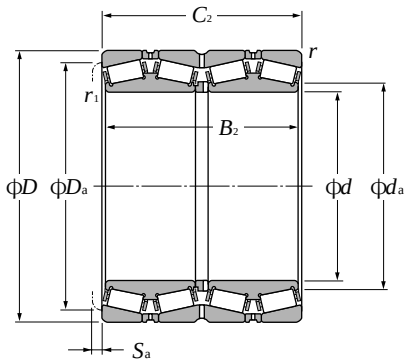

d 457.200～571.500mm

d	Boundary dimensions mm D	B2	C2	r1s min 1)	rs min 1)	Basic load ratings dynamic kN Cr	static Cor	dynamic kgf Cr	static Cor
457.200	596.900	276.225	279.400	1.5	3.3	3 350	10 300	360 000	1 060 000
	660.400	323.850	323.847	3.3	6.4	4 150	11 200	425 000	1 140 000
460	650	474	474	6	6	6 500	19 900	665 000	2 030 000
475	660	450	450	3	5	6 300	20 400	645 000	2 080 000
480	678	494	494	6	6	6 250	19 600	640 000	2 000 000
	700	390	390	6	6	4 700	13 400	480 000	1 370 000
482.600	615.950	330.200	330.200	3.3	6.4	4 000	13 400	405 000	1 370 000
488.950	660.400	365.125	361.950	8	6.4	5 350	16 100	550 000	1 640 000
489.026	634.873	320.675	320.675	3.3	3.3	3 650	12 000	370 000	1 220 000
500	670	515	515	1.5	5	6 900	24 600	700 000	2 510 000
	690	480	480	5	5	6 000	19 900	610 000	2 020 000
	705	515	515	6	6	8 450	27 100	860 000	2 760 000
	730	440	440	6	6	7 200	20 600	735 000	2 100 000
501.650	711.200	520.700	520.700	3.3	6.4	8 650	27 300	885 000	2 790 000
514.350	673.100	422.275	422.275	3.3	6.4	5 950	20 500	605 000	2 090 000
519.112	736.600	536.575	536.575	3.3	6.4	9 100	28 700	925 000	2 930 000
520	735	535	535	7	5	9 100	28 700	925 000	2 930 000
536.575	761.873	558.800	558.800	3.3	6.4	10 100	30 500	1 030 000	3 100 000
558.800	736.600	322.265	322.268	3.3	6.4	4 300	13 500	435 000	1 380 000
	736.600	409.575	409.575	3.3	6.4	6 100	20 500	625 000	2 090 000
570	780	515	515	6	6	9 200	31 000	935 000	3 150 000
	810	590	590	6	6	11 000	35 500	1 120 000	3 600 000
571.500	812.800	593.725	593.725	3.3	6.4	11 900	36 500	1 220 000	3 750 000

1) Minimum allowable dimension for chamfer dimension r or r_1.

Bearing numbers	Abutment and fillet dimensions mm			Mass kg
	d_a	D_a	S_a	(approx.)
☆∗ E-L770849D/L770810/L770810DG2	478	567	5.5	209
∗ E-EE737179D/737260/737260D	495	616	6.5	379
E-625992A	499	598.5	7	493
E-CRO-9501	506	614	10	465
E-625996	525	623	7	563
E-CRO-9602	517	645	8	436
☆∗ E-LM272249D/LM272210/LM272210DG2	504	585	6.5	250
☆∗ T-E-EE640193D/640260/640261DG2	519	624	9	364
∗ E-LM772749D/LM772710/LM772710D	513	600	6.5	268
E-CRO-10008	520	616	8	598
E-CRO-10005	530	640	7	600
☆ E-6259/500	553	649.5	7.5	632
☆ E-CRO-10003	550	683	11	535
☆∗ E-M274149D/M274110/M274110DG2	534	663	9.5	726
∗ E-LM274449D/LM274410/LM274410D	540	648	8	390
☆∗ E-M275349D/M275310/M275310DG2	552	684	9.5	761
☆ E-CRO-10402	558	688	11	750
☆∗ E-M276449D/M276410/M276410DG2	564	711	9.5	890
∗ E-EE843221D/843290/843291D	585	699	8.5	388
☆∗ E-LM377449D/LM377410/LM377410DG2	588	696	8	502
☆ E-CRO-11402	609	733	7.5	625
☆ E-CRO-11403	620	760	10	845
☆∗ E-M278749D/M278710/M278710DAG2	609	756	11	1 080

Note: 1. Bearing numbers marked " ∗ " designate inch series bearings.
2. Bearing numbers marked " ☆ " designate bearing with hollow rollers and pin type cages.

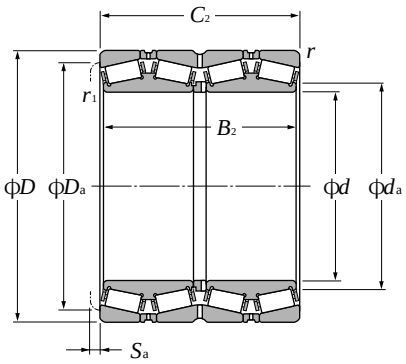

d 584.200～840mm

Boundary dimensions mm						Basic load ratings dynamic kN	static kN	dynamic kgf	static kgf
d	D	B_2	C_2	$r_{1s\ min}$ 1)	$r_{s\ min}$ 1)	C_r	C_{or}	C_r	C_{or}
584.200	762.000	396.875	401.638	3.3	6.4	6 550	22 300	670 000	2 280 000
585.788	771.525	479.425	479.425	3.3	6.4	7 350	25 700	750 000	2 620 000
595.312	844.550	615.950	615.950	3.3	6.4	12 600	40 500	1 290 000	4 100 000
609.600	787.400	361.950	361.950	3.3	6.4	6 450	20 300	655 000	2 070 000
657.225	933.450	676.275	676.275	3.3	6.4	15 300	48 000	1 560 000	4 900 000
660	1 070	642	642	7.5	7.5	15 400	43 500	1 570 000	4 450 000
660.400	812.800	365.125	365.125	3.3	6.4	6 200	23 200	630 000	2 360 000
679.450	901.700	552.450	552.450	3.3	6.4	11 200	38 000	1 140 000	3 900 000
680	870	460	460	3	6	7 500	27 400	765 000	2 790 000
682.625	965.200	701.675	701.675	3.3	6.4	16 100	50 500	1 640 000	5 150 000
685.800	876.300	352.425	355.600	3.3	6.4	6 050	21 800	615 000	2 220 000
710	900	410	410	2.5	5	7 650	26 900	780 000	2 740 000
711.200	914.400	317.500	317.500	3.3	6.4	5 350	17 900	545 000	1 820 000
730	1 070	642	642	7.5	7.5	15 400	46 500	1 570 000	4 750 000
730.250	1 035.050	755.650	755.650	3.3	6.4	18 100	59 500	1 850 000	6 050 000
749.300	990.600	605.000	605.000	3.3	6.4	12 600	45 500	1 290 000	4 650 000
762.000	1 079.500	787.400	787.400	4.8	12.7	19 200	65 000	1 960 000	6 600 000
800	1 120	820	820	7	7.5	21 000	72 500	2 140 000	7 400 000
825.500	1 168.400	844.550	844.550	4.8	12.7	22 300	76 500	2 270 000	7 800 000
840	1 170	840	840	6	6	21 900	76 500	2 230 000	7 800 000

1) Minimum allowable dimension for chamfer dimension r or r_1.

Bearing numbers	Abutment and fillet dimensions mm			Mass kg
	d_a	D_a	S_a	(approx.)
☆∗ E-LM778549D/LM778510/LM778510DG2	615	717	7	511
∗ E-LM278849D/LM278810/LM278810D	615	726	10	750
☆∗ E-M280049D/M280010/M280010DG2	633	786	11	1 160
☆∗ E-EE649241D/649310/649311DG2	636	747	9.5	458
☆∗ E-M281649D/M281610/M281610DG2	699	870	11	1 630
☆ E-CRO-13202	760	991	9	1 950
☆∗ E-L281149D/L281110/L281110DG2	682.8	777	9	448
☆∗ E-LM281849D/LM281810/LM281810DG2	714	852	11	1 040
E-CRO-13602	713	824	8	582
☆∗ E-M282249D/M282210/M282210DG2	723	900	13	1 770
☆∗ E-EE655271D/655345/655346DG2	717	831	8	539
☆ E-CRO-14208	745	850	10	620
☆∗ E-EE755281D/755360/755361DG2	744	873	9.5	527
☆ E-CRO-14601	780	1 020	7	1 900
☆∗ E-M283449D/M283410/M283410DG2	774	966	13	2 210
☆∗ E-LM283649D/LM283610/LM283610DG2	786	936	10.5	1 310
☆∗ E-M284249D/M284210/M284210DG2	810	1 005	13	2 480
☆ E-CRO-16001	858	1 052	10	3 960
☆∗ E-M285848D/M285810/M285810DG2	879	1 085	13	3 010
☆ E-CRO-16803	897	1 099	12	3 970

Note: 1. Bearing numbers marked " ∗ " designate inch series bearings.
2. Bearing numbers marked " ☆ " designate bearing with hollow rollers and pin type cages.

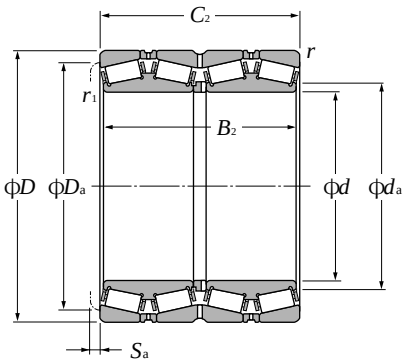

d 863.600～1 200.150mm

Boundary dimensions mm						Basic load ratings dynamic kN	static kN	dynamic kgf	static kgf
d	D	B2	C2	r1s min 1)	rs min 1)	Cr	Cor	Cr	Cor
863.600	1 130.300	669.925	669.925	4.8	12.7	15 800	59 500	1 610 000	6 050 000
	1 219.200	876.300	889.000	4.8	12.7	24 100	83 000	2 450 000	8 450 000
938.212	1 270.000	825.500	825.500	4.8	12.7	22 500	80 000	2 300 000	8 150 000
950	1 360	880	880	4	7.5	27 000	89 000	2 750 000	9 050 000
1 200.150	1 593.850	990.600	990.600	4.8	12.7	33 500	132 000	3 400 000	13 500 000

1）Minimum allowable dimension for chamfer dimension r or r_1.

Bearing numbers	Abutment and fillet dimensions			Mass
	mm			kg
	d_a	D_a	S_a	(approx.)
☆∗ **E-LM286249D/LM286210/LM286210DG2**	906	1 065	11	1 950
☆∗ **E-EE547341D/547480/547481DG2**	918	1 135	6.5	3 640
☆∗ **E-LM287649D/LM287610/LM287610DG2**	990	1 190	10	4 100
☆ **E-CRO-19001**	1 030	1 278	12	4 100
☆∗ **E-LM288949D/LM288910/LM288910DG2**	1 260	1 500	13	6 130

Note: 1. Bearing numbers marked " ∗ " designate inch series bearings.
2. Bearing numbers marked " ☆ " designate bearing with hollow rollers and pin type cages.

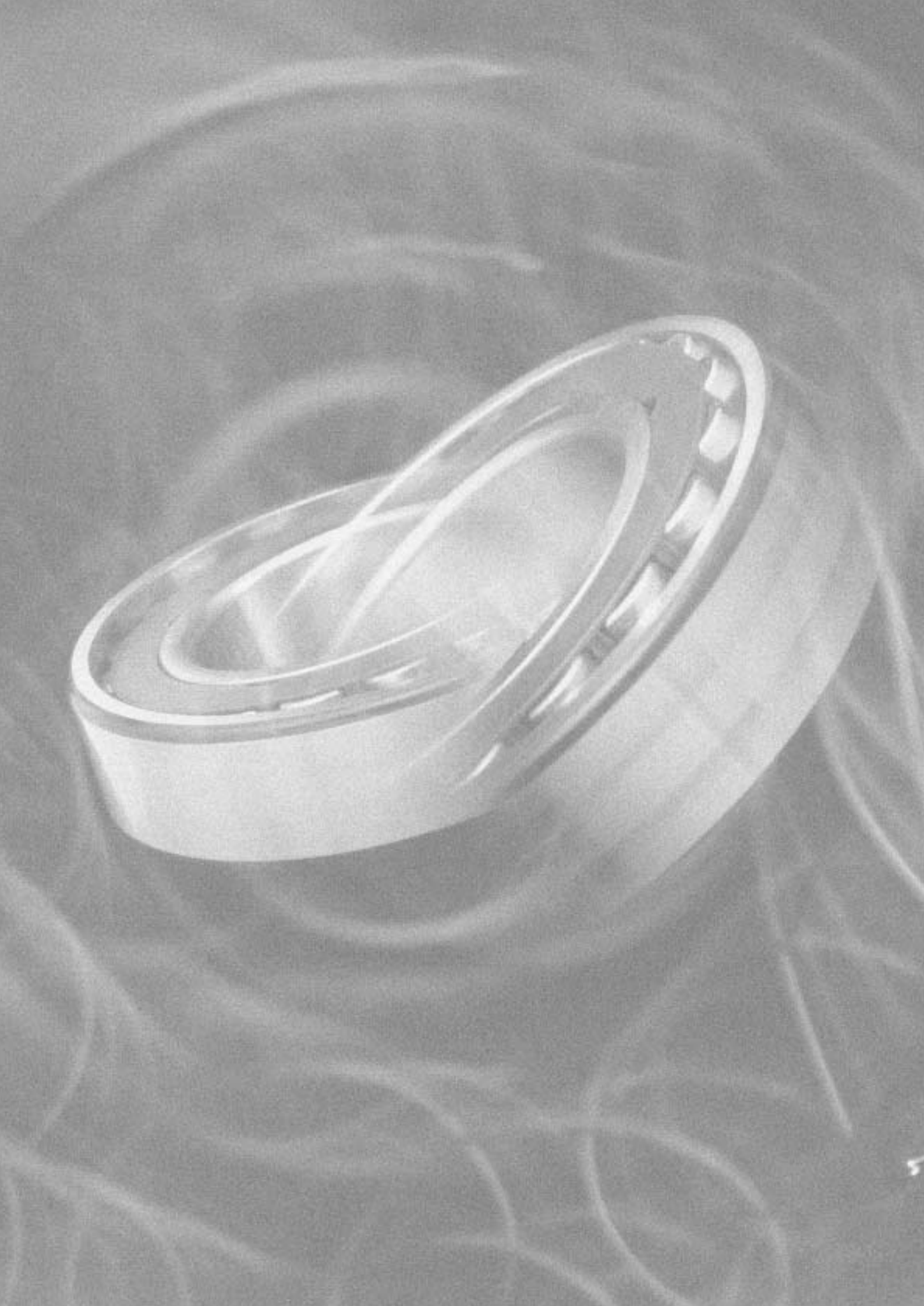

1. Types, construction and characteristics

Spherical roller bearings consist of an outer ring having a continuous spherical raceway within which operates two rows of barrel-shaped rollers which are in turn guided by an inner ring with two raceways separated by a center rib. (Refer to **Diagram 1**) This bearing has self-aligning properties, and therefore is suited for use where misalignment between the inner and outer rings occurs from housing installation error or shaft flexure.

Spherical roller bearings have a large capacity for radial loads, axial loads in either direction, and complex loads. They are also suited for applications where vibration and shock loads are encountered. When operating under axial loads, however, it is desirable to maintain conditions so that $F_a/F_r \leqq 2e$ in order to prevent sliding movement along the row of rollers not receiving the axial load. (For the value of e, refer to dimension tables.)

As shown in **Table 1**, in addition to standard type there are various other types of spherical roller bearings. Among these, **Type E** has a particularly high load capacity.

In addition to bearings with cylindrical bore, those with tapered bore are also available. Bearings with tapered bore are specified by attaching the suffix "K" to the end of the bearing's basic number. The standard taper ratio is 1:12 for bearings with a "K" suffix, but for bearings in series 240 and 241 the suffix "K30" indicates the taper ratio for a bearing is 1:30. Most tapered bore bearings incorporate the use of adapters and withdrawal sleeves for shaft mounting.

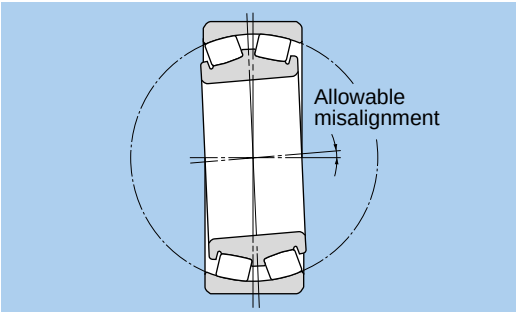

Diagram 1.

Table 1 Types of spherical roller bearings

Type	Standard type (B type)	C type	213 type	E type
Construction	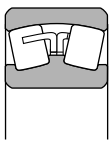	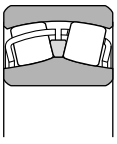	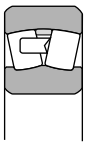	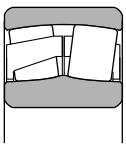
Bearing series	Does not include C type	Series 222, 223, and 213 with bore dia. of 50 mm or less; series 24024 to 24038.	Series 213 with bore dia. of 55 mm or more	Series 22211 to 22218
Rollers	Asymmetrical	Symmetrical	Asymmetrical	Symmetrical
Roller guide method	Unified inner ring center rib	By guide ring between the 2 rows of rollers	By guide ring between rows of rollers on outer ring raceway	High precision cage (no guide ring, center rib)
cage type	Pressed cage; machined cage	Pressed cage	Machined cage	Molded resin cage

2. Standard cage types

Standard cage types for spherical roller bearings are shown in **Table 2**. In general, pressed cages are standard for small sized bearings, and machined cages are standard for large sized bearings.

E type bearings use as their standard cage type a cage molded from a newly developed glass fiber reinforced **polyamide 46 resin which has excellent heat resistance qualities (allowable operating temperatures up to 150˚C)**, strength, as well as unsurpassed oil resistance.

A standard cage may however not be able to be used for high-speed specifications, in high temperature atmospheres, or under excessive vibration/impact conditions. For more information concerning such conditions, please contact NTN Engineering.

Table 2 Standard cage types

Bearing series	Molded resin cage	Pressed cage	Machined cage
239	–	–	23932 ~ 239/1400
230	–	23022B ~ 23048B	23052B ~ 230/1120B
240	–	24024C ~ 24038C	24024B ~ 240/1120B
231	–	23120B ~ 23136B	23138B ~ 231/900B
241	–	–	24122B ~ 241/710B
222	22211E ~ 22218E	22208C ~ 22210C 22211B ~ 22236B	22238B ~ 22264B
232	–	–	23218B ~ 232/750B
213	–	21308C ~ 21310C	21311 ~ 21322
223	–	22308C ~ 22310C 22311B ~ 22328B	22330B ~ 22360B

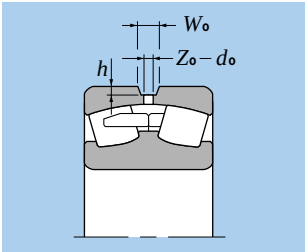

Table 3 Oil inlet and oil groove dimensions Units mm

Nominal bearing width over	Nominal bearing width including	Oil groove width W_o	Oil inlet diameter d_o	Oil groove depth h Width series 1, 2, 3	Oil groove depth h Width series 4
–	30	6	3	1.2	1.0
30	45	7	4	1.5	1.1
45	60	9	5	1.5	1.3
60	80	11	6	2.0	1.5
80	100	14	8	2.5	2.0
100	120	16	10	3.0	2.5
120	160	20	12	3.5	3.0
160	200	27	16	5.0	3.5
200	315	33	20	6.0	5.0
315	–	42	25	7.0	6.5

Table 4 Oil inlet number

Nominal bearing outer diameter mm over up to	Nominal bearing outer diameter mm including	Oil inlet number Z_o
–	320	4
320	1 010	8
1 010	–	12

If a pin is necessary to prevent outer ring rotation, contact NTN Engineering.

3. Oil inlets and oil groove dimensions

Spherical roller bearings with an outer diameter of 320mm or more are provided with an oil inlet and oil groove on the outer ring for the purpose of supplying lubricant to the bearing's moving parts. When necessary, oil inlets and oil grooves can also be provided on bearings with outer diameters less than 320 mm. In such cases, please add the supplementary suffix code "D1" to the end of the bearing number, and contact NTN Engineering. (Refer to page A-29)

Table 3 lists dimensions for oil inlets and oil grooves. **Table 4** contains information about the number of oil inlets.

4. Allowable misalignment

Spherical roller bearings possess the same self-aligning properties as other self-aligning bearings. The allowable misalignment angle will vary according to dimension series and load conditions, but the following misalignment angles are generally standard:

Normal load (loads equivalent to 0.09 C_r): ·····0.009rad (0.5˚)
Light load: ·····0.035rad (2˚)

5. Adapters and withdrawal sleeves

Adapters are used for installation of bearings with tapered bore on cylindrical shafts. Withdrawal sleeves are also used to install and disassemble bearings with tapered bore onto and off of cylindrical shafts. In disassembling the bearing from the shaft, the nut is pressed down against the edge of the inner ring utilizing the bolt provided on the withdrawal sleeve, and then the sleeve is drawn away from the bearing's inner diameter surface. (Precision of adapter and withdrawal sleeve are stipulated JIS B 1552 and JIS B 1556).

For bearings with a bore diameter of 200 mm or more, high pressure oil (hydraulic) type adapters and withdrawal sleeves have been standardized to make installation and disassembly easier. As shown in **Diagram 2** construction is designed to reduce friction by injecting high pressure oil between the surfaces of the adapter sleeve and bearing inner bore by means of a pressure fitting.

If the oil supply inlet is attached in the nut side of the adapter, the supplementary suffix "HF" should be added to the bearing number; if the oil supply inlet is attached on the opposite side, the suffix "HB" should be added to the bearing number. For adapter sleeves, the supplementary suffix "H" is added to the bearing's number in both cases.

The hydraulic sleeve nut is equipped with holes for bolts used for mounting and dismounting and holes for hydraulic piping. The suffix SP or SPB is added to the bearing number of the nut.

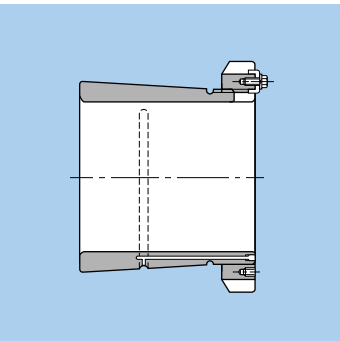

Diagram 2.

6. LH series

In recent years, conditions under which spherical roller bearings are used have become increasingly severe. In particular, longer life is now demanded for use in high temperature environments.

Taking the global environment into account, NTN Engineering has developed a type of steel (STJ2) that offers longer life in a wide range of temperatures, from room temperature all the way up to 250˚C. The steel is standardly used in NTN Engineering's **LH series of spherical roller bearings.**

Features are as follows (in comparison with SUJ2):

(1) Longer life in wide range of temperatures.
- 3.5 times longer life at room temperature.
- 30 times longer life at high temperature (250˚C).

(2) Resists surface damage.
- 7 times stronger resistance to peeling
- 1.4 times stronger resistance to smearing
- 2.5 times stronger resistance to wear

(3) Dimensions stability at high temperatures.
- Almost no dimensional variation when maintained at 250˚C.

(4) Enhanced cracking fatigue strength.
- 2 times longer cracking fatigue life under high temperatures or tight fitting stress.
- 2 times better operating cracking fatigue strength.

(5) Simplified service part stock management.
- Applications ranging from room temperature to 250˚C can be handles with a single type of standard bearing.

Items with LH preceding the basic number in the dimensions table are LH series and are gradually being switched.

Bearing numbers without LH can be manufactured according to size. For information, please contact NTN Engineering.

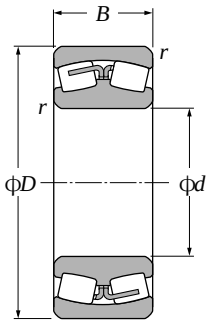

Cylindrical bore

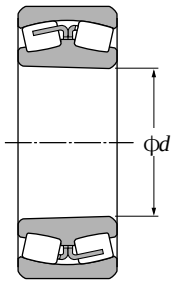

Tapered bore

d 25～75mm

Boundary dimensions mm				Basic load ratings dynamic kN		Basic load ratings static kgf		Limiting speeds[1] min^{-1}		Bearing numbers[4] cylindrical bore	Bearing numbers[4] tapered[2] bore
d	D	B	$r_{s\,min}$[3]	C_r	C_{or}	C_r	C_{or}	grease	oil		
25	52	18	1	36.5	36	3 750	3 650	8 500	11 000	**22205C**	**22205CK**
30	62	20	1	49	49	5 000	5 000	7 500	9 500	**22206C**	**22206CK**
35	72	23	1.1	69.5	71	7 050	7 200	6 500	8 500	**22207C**	**22207CK**
40	80	23	1.1	79	88.5	8 050	9 000	6 000	7 600	**LH-22208C**	**LH-22208CK**
	90	23	1.5	88	90	8 950	9 150	4 900	6 400	**21308C**	**21308CK**
	90	33	1.5	121	128	12 300	13 000	4 500	5 900	**22308C**	**22308CK**
45	85	23	1.1	82.5	95	8 400	9 700	5 300	6 800	**LH-22209C**	**LH-22209CK**
	100	25	1.5	102	106	10 400	10 800	4 400	5 700	**21309C**	**21309CK**
	100	36	1.5	148	167	15 100	17 000	4 100	5 300	**22309C**	**22309CK**
50	90	23	1.1	86	102	8 750	10 400	4 900	6 300	**LH-22210C**	**LH-22210CK**
	110	27	2	118	127	12 000	12 900	4 000	5 200	**21310C**	**21310CK**
	110	40	2	186	212	19 000	21 600	3 700	4 800	**22310C**	**22310CK**
55	100	25	1.5	118	144	12 000	14 700	4 400	5 800	**LH-22211E**	**LH-22211EK**
	100	25	1.5	93.5	110	9 500	11 200	4 500	5 800	**LH-22211B**	**LH-22211BK**
	120	29	2	145	163	14 800	16 600	3 700	4 800	**21311**	**21311K**
	120	43	2	204	234	20 800	23 900	3 400	4 400	**22311B**	**22311BK**
60	110	28	1.5	150	182	15 300	18 500	4 000	5 300	**LH-22212E**	**LH-22212EK**
	110	28	1.5	115	147	11 700	15 000	4 100	5 300	**LH-22212B**	**LH-22212BK**
	130	31	2.1	167	191	17 100	19 500	3 400	4 400	**21312**	**21312K**
	130	46	2.1	238	273	24 300	27 800	3 100	4 000	**22312B**	**22312BK**
65	120	31	1.5	177	217	18 000	22 200	3 800	5 000	**LH-22213E**	**LH-22213EK**
	120	31	1.5	143	179	14 600	18 300	3 900	5 000	**LH-22213B**	**LH-22213BK**
	140	33	2.1	194	228	19 800	23 200	3 100	4 000	**21313**	**21313K**
	140	48	2.1	265	320	27 100	32 500	2 800	3 700	**22313B**	**22313BK**
70	125	31	1.5	184	232	18 700	23 600	3 400	4 600	**LH-22214E**	**LH-22214EK**
	125	31	1.5	154	201	15 700	20 500	3 500	4 600	**LH-22214B**	**LH-22214BK**
	150	35	2.1	220	262	22 400	26 800	2 900	3 800	**21314**	**21314K**
	150	51	2.1	325	380	33 000	39 000	2 700	3 500	**22314B**	**22314BK**
75	130	31	1.5	190	246	19 400	25 100	3 200	4 200	**LH-22215E**	**LH-22215EK**

1）This value was achieved with machined cages and molded resin cages; for pressed cages, 75% of this value is allowable.
2）"**K**" indicates bearings have tapered bore with a taper ratio of 1: 12. 3）Smallest allowable dimension for chamfer dimension r.
4）Bearing number with the prefix **LH** indicates LH series.

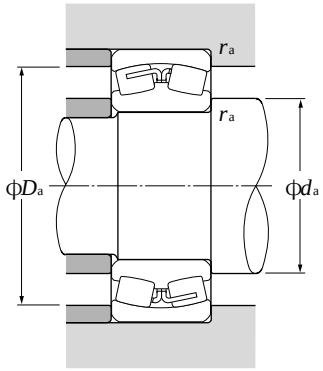

Equivalent radial load
dynamic

$P_r = XF_r + YF_a$

$\frac{F_a}{F_r} \leqq e$		$\frac{F_a}{F_r} > e$	
X	Y	X	Y
1	Y_1	0.67	Y_2

static

$P_{or} = F_r + Y_o F_a$

For values of e, Y_2 and Y_o see the table below.

Abutment and fillet dimensions (mm)					Constant	Axial load factors			Mass (approx.) (kg)	
d_a		D_a		r_{as}						
min	max	min	max	max	e	Y_1	Y_2	Y_o	cylindrical bore	tapered bore
31	—	—	46	1	0.35	1.92	2.86	1.88	0.186	0.182
36	—	—	56	1	0.33	2.07	3.09	2.03	0.287	0.282
42	—	—	65	1	0.32	2.09	3.11	2.04	0.446	0.437
47	—	—	73	1	0.29	2.35	3.50	2.30	0.526	0.515
48.5	—	—	81.5	1.5	0.26	2.55	3.80	2.50	0.705	0.694
48.5	—	—	81.5	1.5	0.38	1.76	2.62	1.72	0.974	0.951
52	—	—	78	1	0.27	2.50	3.72	2.44	0.584	0.572
53.5	—	—	91.5	1.5	0.26	2.60	3.87	2.54	0.927	0.912
53.5	—	—	91.5	1.5	0.36	1.86	2.77	1.82	1.33	1.3
57	—	—	83	1	0.25	2.69	4.01	2.63	0.63	0.616
60	—	—	100	2	0.26	2.64	3.93	2.58	1.21	1.19
60	—	—	100	2	0.37	1.80	2.69	1.76	1.79	1.75
63.5	67	89.5	91.5	1.5	0.24	2.83	4.21	2.76	0.808	0.79
63.5	—	—	91.5	1.5	0.28	2.42	3.61	2.37	0.85	0.832
65	—	—	110	2	0.25	2.69	4.01	2.63	1.71	1.69
65	—	—	110	2	0.40	1.68	2.50	1.64	2.3	2.25
68.5	72	98	101.5	1.5	0.25	2.75	4.09	2.69	1.09	1.07
68.5	—	—	101.5	1.5	0.27	2.49	3.71	2.44	1.15	1.13
72	—	—	118	2	0.25	2.69	4.00	2.63	2.1	2.07
72	—	—	118	2	0.42	1.62	2.42	1.59	2.9	2.83
73.5	78.5	107	111.5	1.5	0.25	2.71	4.04	2.65	1.43	1.4
73.5	—	—	111.5	1.5	0.28	2.42	3.60	2.37	1.5	1.47
77	—	—	128	2	0.25	2.69	4.00	2.63	2.55	2.51
77	—	—	128	2	0.38	1.79	2.67	1.75	3.45	3.37
78.5	83.5	112.5	116.5	1.5	0.24	2.86	4.25	2.79	1.51	1.47
78.5	—	—	116.5	1.5	0.26	2.55	3.80	2.50	1.55	1.52
82	—	—	138	2	0.25	2.69	4.00	2.63	3.18	3.14
82	—	—	138	2	0.37	1.81	2.70	1.77	4.22	4.12
83.5	89	117.5	121.5	1.5	0.22	3.00	4.47	2.94	1.59	1.55

Note: Upon request, bearings with oil inlets and oil grooves on the outer ring can also be manufactured. In such cases, please add the suffix "**D1**" to the end of the bearing number. (Example: **22214BD1**)

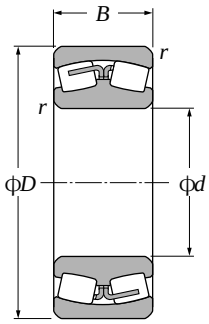

Cylindrical bore

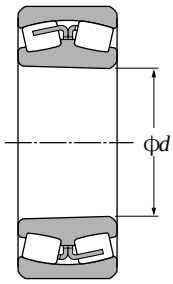

Tapered bore

d 75～120mm

Boundary dimensions mm				Basic load ratings dynamic kN		Basic load ratings static kgf		Limiting speeds[1] min^{-1}		Bearing numbers[4] cylindrical bore	Bearing numbers[4] tapered[2] bore
d	*D*	*B*	$r_{s\,min}$[3]	C_r	C_{or}	C_r	C_{or}	grease	oil		
75	130	31	1.5	166	223	16 900	22 800	3 200	4 200	LH-22215B	LH-22215BK
	160	37	2.1	239	287	24 300	29 300	2 700	3 500	21315	21315K
	160	55	2.1	330	410	33 500	42 000	2 500	3 200	22315B	22315BK
80	140	33	2	213	277	21 700	28 200	3 000	4 000	LH-22216E	LH-22216EK
	140	33	2	179	239	18 300	24 400	3 100	4 000	LH-22216B	LH-22216BK
	170	39	2.1	260	315	26 500	32 000	2 500	3 300	21316	21316K
	170	58	2.1	385	470	39 500	48 000	2 300	3 000	22316B	22316BK
85	150	36	2	251	320	25 600	33 000	2 800	3 800	LH-22217E	LH-22217EK
	150	36	2	206	272	21 000	27 800	2 900	3 800	LH-22217B	LH-22217BK
	180	41	3	289	355	29 500	36 000	2 400	3 100	21317	21317K
	180	60	3	415	510	42 500	52 000	2 200	2 900	22317B	22317BK
90	160	40	2	292	385	29 800	39 500	2 600	3 500	LH-22218E	LH-22218EK
	160	40	2	256	345	26 200	35 000	2 700	3 500	LH-22218B	LH-22218BK
	160	52.4	2	315	455	32 500	46 500	2 200	2 800	23218B	23218BK
	190	43	3	320	400	32 500	40 500	2 300	3 000	21318	21318K
	190	64	3	480	590	49 000	60 000	2 100	2 700	22318B	22318BK
95	170	43	2.1	294	390	30 000	39 500	2 500	3 300	22219B	22219BK
	200	45	3	335	420	34 000	43 000	2 100	2 700	21319	21319K
	200	67	3	500	615	51 000	63 000	1 900	2 500	22319B	22319BK
100	165	52	2	310	470	31 500	47 500	2 000	2 600	23120B	23120BK
	180	46	2.1	315	415	32 000	42 500	2 400	3 200	22220B	22220BK
	180	60.3	2.1	405	580	41 500	59 000	1 900	2 500	23220B	23220BK
	215	47	3	370	465	37 500	47 500	2 000	2 600	21320	21320K
	215	73	3	605	755	61 500	77 000	1 800	2 400	22320B	22320BK
110	170	45	2	282	455	28 800	46 500	2 200	2 800	23022B	23022BK
	180	56	2	370	580	37 500	59 500	1 800	2 400	23122B	23122BK
	180	69	2	450	755	46 000	77 000	1 800	2 400	24122B	24122BK30
	200	53	2.1	410	570	42 000	58 000	2 200	2 800	22222B	22222BK
	200	69.8	2.1	515	760	52 500	77 500	1 700	2 200	23222B	23222BK
	240	50	3	495	615	50 500	62 500	1 800	2 300	21322	21322K
	240	80	3	745	930	76 000	95 000	1 700	2 200	22322B	22322BK
120	180	46	2	296	495	30 000	50 500	2 000	2 600	23024B	23024BK

1) This value was achieved with machined cages and molded resin cages; for pressed cages, 75% of this value is allowable.
2) Bearings appended with "**K**" have a tapered bore ratio of 1:12. 3) Smallest allowable dimension for chamfer dimension *r*.
4) Bearing number with the prefix **LH** indicates LH series.

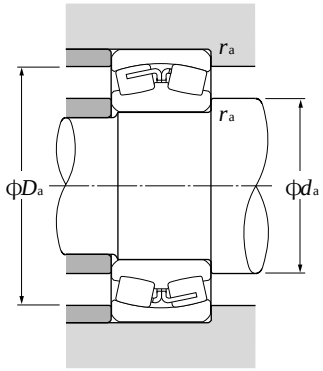

Equivalent radial load
dynamic

$P_r = XF_r + YF_a$

$\frac{F_a}{F_r} \leqq e$		$\frac{F_a}{F_r} > e$	
X	Y	X	Y
1	Y_1	0.67	Y_2

static

$P_{or} = F_r + Y_o F_a$

For values of e, Y_2 and Y_o see the table below.

Abutment and fillet dimensions (mm)					Constant	Axial load factors			Mass (approx.) (kg)	
d_a		D_a		r_{as}					cylindrical bore	tapered bore
min	max	min	max	max	e	Y_1	Y_2	Y_o		
83.5	—	—	121.5	1.5	0.24	2.81	4.19	2.75	1.65	1.61
87	—	—	148	2	0.24	2.84	4.23	2.78	3.81	3.76
87	—	—	148	2	0.37	1.80	2.69	1.76	5.25	5.13
90	94.5	125.5	130	2	0.22	3.01	4.48	2.94	1.99	1.94
90	—	—	130	2	0.26	2.64	3.93	2.58	2.15	2.11
92	—	—	158	2	0.23	2.95	4.39	2.88	4.53	4.47
92	—	—	158	2	0.37	1.80	2.69	1.76	6.05	5.91
95	100.5	135	140	2	0.23	2.96	4.41	2.90	2.49	2.43
95	—	—	140	2	0.26	2.60	3.88	2.55	2.66	2.61
99	—	—	166	2.5	0.25	2.69	4.00	2.63	5.35	5.28
99	—	—	166	2.5	0.37	1.82	2.71	1.78	7.1	6.94
100	107.5	144	150	2	0.24	2.86	4.25	2.79	3.24	3.16
100	—	—	150	2	0.26	2.55	3.80	2.49	3.5	3.42
100	—	—	150	2	0.33	2.04	3.03	1.99	4.45	4.32
104	—	—	176	2.5	0.24	2.83	4.22	2.77	6.3	6.21
104	—	—	176	2.5	0.37	1.80	2.69	1.76	8.35	8.16
107	—	—	158	2	0.26	2.63	3.92	2.57	4.1	4.01
109	—	—	186	2.5	0.23	3.00	4.46	2.93	7.1	7
109	—	—	186	2.5	0.37	1.80	2.69	1.76	9.76	9.54
110	—	—	155	2	0.32	2.12	3.15	2.07	4.3	4.16
112	—	—	168	2	0.26	2.55	3.80	2.49	4.95	4.84
112	—	—	168	2	0.34	1.98	2.94	1.93	6.47	6.28
114	—	—	201	2.5	0.22	3.01	4.48	2.94	8.89	8.78
114	—	—	201	2.5	0.37	1.80	2.69	1.76	12.4	12.1
120	—	—	160	2	0.26	2.59	3.85	2.53	3.71	3.58
120	—	—	170	2	0.31	2.17	3.24	2.13	5.4	5.22
120	—	—	170	2	0.38	1.76	2.63	1.73	7.07	6.96
122	—	—	188	2	0.27	2.51	3.74	2.46	7.2	7.04
122	—	—	188	2	0.35	1.91	2.84	1.86	9.71	9.43
124	—	—	226	2.5	0.21	3.20	4.77	3.13	11.2	11.1
124	—	—	226	2.5	0.36	1.87	2.79	1.83	17.1	16.7
130	—	—	170	2	0.25	2.69	4.01	2.63	4.05	3.9

Note: Upon request, bearings with oil inlets and oil grooves on the outer ring can also be manufactured. In such cases, please add the suffix "**D1**" to the end of the bearing number. (Example: **23024BD1**)

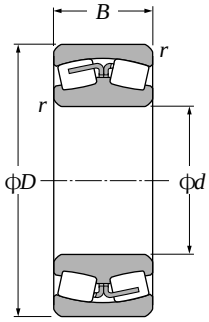

Cylindrical bore

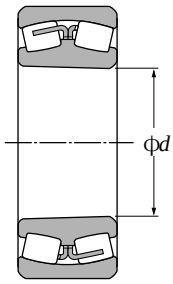

Tapered bore

d 120～160mm

Boundary dimensions mm				Basic load ratings kN dynamic		kgf dynamic		Limiting speeds[1] min^{-1}		Bearing numbers[4] cylindrical bore	Bearing numbers[4] tapered[2] bore
d	D	B	$r_{s\,min}$[3]	C_r	static C_{or}	C_r	static C_{or}	grease	oil		
120	180	60	2	390	670	39 500	68 500	1 800	2 300	**24024B**	**24024BK30**
	180	60	2	395	695	40 000	71 000	1 800	2 300	**24024C**	**24024CK30**
	200	62	2	455	705	46 500	71 500	1 600	2 100	**23124B**	**23124BK**
	200	80	2	575	945	58 500	96 500	1 600	2 100	**24124B**	**24124BK30**
	215	58	2.1	485	700	49 500	71 500	2 000	2 600	**22224B**	**22224BK**
	215	76	2.1	585	880	59 500	89 500	1 500	2 000	**23224B**	**23224BK**
	260	86	3	880	1 120	89 500	114 000	1 500	2 000	**22324B**	**22324BK**
130	200	52	2	375	620	38 500	63 500	1 800	2 300	**23026B**	**23026BK**
	200	69	2	505	895	51 500	91 000	1 600	2 100	**24026B**	**24026BK30**
	200	69	2	490	860	50 000	87 500	1 600	2 100	**24026C**	**24026CK30**
	210	64	2	495	795	50 500	81 000	1 500	2 000	**23126B**	**23126BK**
	210	80	2	585	995	60 000	102 000	1 500	2 000	**24126B**	**24126BK30**
	230	64	3	570	790	58 000	80 500	1 800	2 400	**22226B**	**22226BK**
	230	80	3	685	1 060	70 000	108 000	1 500	1 900	**23226B**	**23226BK**
	280	93	4	1 000	1 290	102 000	131 000	1 400	1 800	**22326B**	**22326BK**
140	210	53	2	405	690	41 000	70 500	1 700	2 200	**23028B**	**23028BK**
	210	69	2	510	945	52 000	96 500	1 500	1 900	**24028B**	**24028BK30**
	210	69	2	520	940	53 000	95 500	1 500	1 900	**24028C**	**24028CK30**
	225	68	2.1	540	895	55 000	91 000	1 400	1 800	**23128B**	**23128BK**
	225	85	2.1	670	1 150	68 500	117 000	1 400	1 800	**24128B**	**24128BK30**
	250	68	3	685	975	70 000	99 500	1 700	2 200	**22228B**	**22228BK**
	250	88	3	805	1 270	82 000	129 000	1 300	1 700	**23228B**	**23228BK**
	300	102	4	1 130	1 460	115 000	149 000	1 300	1 700	**22328B**	**22328BK**
150	225	56	2.1	445	775	45 500	79 000	1 500	2 000	**23030B**	**23030BK**
	225	75	2.1	585	1 060	59 500	108 000	1 400	1 800	**24030B**	**24030BK30**
	225	75	2.1	600	1 090	61 000	111 000	1 400	1 800	**24030C**	**24030CK30**
	250	80	2.1	730	1 190	74 500	121 000	1 300	1 700	**23130B**	**23130BK**
	250	100	2.1	885	1 520	90 500	155 000	1 300	1 700	**24130B**	**24130BK30**
	270	73	3	775	1 160	79 000	119 000	1 600	2 000	**22230B**	**22230BK**
	270	96	3	935	1 460	95 000	149 000	1 200	1 600	**23230B**	**23230BK**
	320	108	4	1 270	1 750	130 000	179 000	1 200	1 600	**22330B**	**22330BK**
160	220	45	2	320	610	33 000	62 500	1 500	2 000	**23932**	**23932K**
	240	60	2.1	505	885	51 500	90 000	1 500	1 900	**23032B**	**23032BK**
	240	80	2.1	650	1 200	66 500	122 000	1 300	1 700	**24032B**	**24032BK30**
	240	80	2.1	665	1 250	67 500	127 000	1 300	1 700	**24032C**	**24032CK30**

1) This value was achieved with machined cages and molded resin cages; for pressed cages, 75% of this value is allowable.
2) Bearings appended with "**K**" have a tapered bore ratio of 1:12. 3) Smallest allowable dimension for chamfer dimension r.

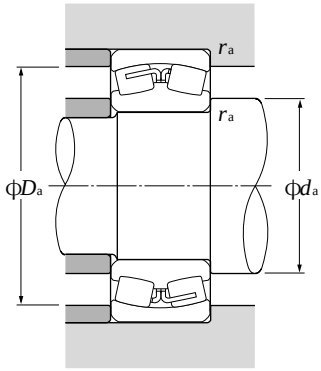

Equivalent radial load
dynamic

$P_r = XF_r + YF_a$

$\frac{F_a}{F_r} \leqq e$		$\frac{F_a}{F_r} > e$	
X	Y	X	Y
1	Y_1	0.67	Y_2

static

$P_{or} = F_r + Y_o F_a$

For values of e, Y_2 and Y_o see the table below.

Abutment and fillet dimensions mm			Constant	Axial load factors			Mass (approx.) kg	
d_a min	D_a max	r_{as} max	e	Y_1	Y_2	Y_o	cylindrical bore	tapered bore
130	170	2	0.33	2.06	3.07	2.02	5.48	5.39
130	170	2	0.32	2.12	3.15	2.07	5.48	4.91
130	190	2	0.31	2.17	3.24	2.13	7.7	7.46
130	190	2	0.40	1.68	2.50	1.64	10.3	10.1
132	203	2	0.27	2.47	3.68	2.42	9.1	8.89
132	203	2	0.36	1.89	2.82	1.85	12.1	11.7
134	246	2.5	0.37	1.80	2.69	1.76	21.5	21
140	190	2	0.26	2.63	3.92	2.57	5.9	5.69
140	190	2	0.34	1.98	2.95	1.94	8.08	7.95
140	190	2	0.32	2.12	3.15	2.07	7.91	7.78
140	200	2	0.30	2.23	3.32	2.18	8.47	8.2
140	200	2	0.38	1.78	2.65	1.74	11	10.8
144	216	2.5	0.28	2.39	3.56	2.33	11.2	10.9
144	216	2.5	0.35	1.92	2.86	1.88	14.3	13.9
148	262	3	0.37	1.81	2.69	1.77	26.8	26.2
150	200	2	0.25	2.73	4.06	2.67	6.35	6.12
150	200	2	0.32	2.09	3.12	2.05	8.57	8.43
150	200	2	0.30	2.23	3.32	2.18	8.48	7.66
152	213	2	0.30	2.25	3.35	2.20	10.2	9.86
152	213	2	0.38	1.80	2.68	1.76	13.3	13.1
154	236	2.5	0.28	2.39	3.55	2.33	14	13.7
154	236	2.5	0.36	1.90	2.83	1.86	18.8	18.2
158	282	3	0.37	1.80	2.69	1.76	33.8	33
162	213	2	0.24	2.76	4.11	2.70	7.73	7.45
162	213	2	0.33	2.06	3.07	2.02	10.7	10.5
162	213	2	0.30	2.25	3.34	2.20	10.5	10.3
162	238	2	0.32	2.11	3.15	2.06	15.6	15.1
162	238	2	0.40	1.69	2.51	1.65	20.2	20
164	256	2.5	0.27	2.46	3.66	2.4	18.1	17.7
164	256	2.5	0.36	1.88	2.79	1.83	24.1	23.4
168	302	3	0.35	1.92	2.86	1.88	42.7	41.8
170	210	2	0.18	3.69	5.49	3.61	5.5	5.33
172	228	2	0.25	2.74	4.09	2.68	9.42	9.09
172	228	2	0.32	2.10	3.13	2.06	13	12.8
172	228	2	0.31	2.18	3.24	2.13	12	11.8

Note: An oil groove is provided for outer rings of bearings with an outer diameter (D dimension) of 320 mm or more. See page **B-226** on dimensions. We can make bearings with oil hole or oil groove in the outer ring, per your request, for an outer diameter of 320mm or less. Such bearings are indicated by attaching "**D1**" to the end of the bearing number. (ex. **23032BD1**)

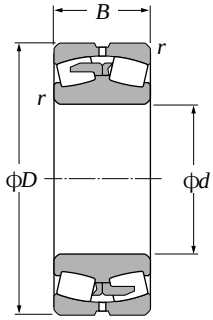

Cylindrical bore

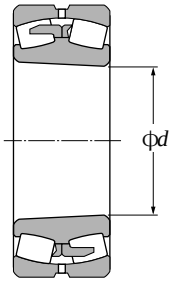

Tapered bore

d 160～200mm

Boundary dimensions mm				Basic load ratings kN dynamic		kgf static		Limiting speeds[1] min^{-1}		Bearing numbers[4] cylindrical bore	Bearing numbers[4] tapered[2] bore
d	D	B	$r_{s\,min}$[3]	C_r	C_{or}	C_r	C_{or}	grease	oil		
160	270	86	2.1	840	1 370	85 500	140 000	1 200	1 600	**23132B**	**23132BK**
	270	109	2.1	1 040	1 780	106 000	181 000	1 200	1 600	**24132B**	**24132BK30**
	290	80	3	870	1 290	88 500	132 000	1 500	1 900	**22232B**	**22232BK**
	290	104	3	1 050	1 660	107 000	170 000	1 200	1 500	**23232B**	**23232BK**
	340	114	4	1 410	1 990	144 000	203 000	1 200	1 500	**22332B**	**22332BK**
170	230	45	2	330	650	34 000	66 000	1 500	1 900	**23934**	**23934K**
	260	67	2.1	630	1 080	64 000	110 000	1 400	1 800	**23034B**	**23034BK**
	260	90	2.1	800	1 470	81 500	150 000	1 200	1 600	**24034B**	**24034BK30**
	260	90	2.1	815	1 500	83 000	153 000	1 200	1 600	**24034C**	**24034CK30**
	280	88	2.1	885	1 490	90 500	152 000	1 200	1 500	**23134B**	**23134BK**
	280	109	2.1	1 080	1 880	110 000	191 000	1 200	1 500	**24134B**	**24134BK30**
	310	86	4	1 000	1 520	102 000	155 000	1 400	1 800	**22234B**	**22234BK**
	310	110	4	1 180	1 960	120 000	200 000	1 100	1 400	**23234B**	**23234BK**
	360	120	4	1 540	2 180	157 000	223 000	1 100	1 400	**22334B**	**22334BK**
180	250	52	2	440	835	45 000	85 000	1 400	1 800	**23936**	**23936K**
	280	74	2.1	740	1 290	75 500	132 000	1 300	1 700	**23036B**	**23036BK**
	280	100	2.1	965	1 770	98 500	181 000	1 200	1 500	**24036B**	**24036BK30**
	280	100	2.1	965	1 770	98 500	181 000	1 200	1 500	**24036C**	**24036CK30**
	300	96	3	1 030	1 730	105 000	176 000	1 100	1 400	**23136B**	**23136BK**
	300	118	3	1 250	2 210	127 000	225 000	1 100	1 400	**24136B**	**24136BK30**
	320	86	4	1 040	1 610	106 000	164 000	1 300	1 700	**22236B**	**22236BK**
	320	112	4	1 230	2 000	125 000	204 000	1 000	1 300	**23236B**	**23236BK**
	380	126	4	1 740	2 560	177 000	261 000	1 000	1 300	**22336B**	**22336BK**
190	260	52	2	460	890	47 000	91 000	1 300	1 700	**23938**	**23938K**
	290	75	2.1	755	1 350	77 000	138 000	1 200	1 600	**23038B**	**23038BK**
	290	100	2.1	995	1 850	102 000	188 000	1 100	1 400	**24038B**	**24038BK30**
	290	100	2.1	970	1 820	98 500	186 000	1 100	1 400	**24038C**	**24038CK30**
	320	104	3	1 190	2 020	122 000	206 000	1 000	1 300	**23138B**	**23138BK**
	320	128	3	1 420	2 480	144 000	253 000	1 000	1 300	**24138B**	**24138BK30**
	340	92	4	1 160	1 810	118 000	185 000	1 200	1 600	**22238B**	**22238BK**
	340	120	4	1 400	2 330	143 000	237 000	920	1 200	**23238B**	**23238BK**
	400	132	5	1 870	2 790	191 000	284 000	920	1 200	**22338B**	**22338BK**
200	280	60	2.1	545	1 100	56 000	112 000	1 200	1 600	**23940**	**23940K**
	310	82	2.1	915	1 620	93 000	165 000	1 200	1 500	**23040B**	**23040BK**
	310	109	2.1	1 160	2 140	118 000	219 000	1 000	1 300	**24040B**	**24040BK30**

1）This value was achieved with machined cages and molded resin cages; for pressed cages, 75% of this value is allowable.
2）Bearings appended with "**K**" have a tapered bore ratio of 1:12. 3）Smallest allowable dimension for chamfer dimension r.

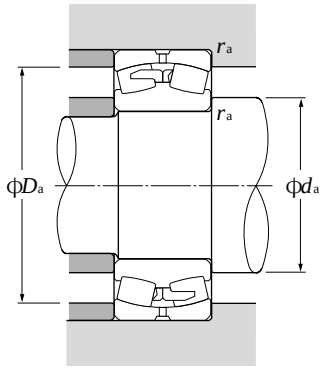

Equivalent radial load
dynamic

$P_r = XF_r + YF_a$

$\frac{F_a}{F_r} \leqq e$		$\frac{F_a}{F_r} > e$	
X	Y	X	Y
1	Y_1	0.67	Y_2

static

$P_{or} = F_r + Y_o F_a$

For values of e, Y_2 and Y see the table below.

Abutment and fillet dimensions mm			Constant	Axial load factors			Mass (approx.) kg	
d_a min	D_a max	r_{as} max	e	Y_1	Y_2	Y_o	cylindrical bore	tapered bore
172	258	2	0.32	2.11	3.15	2.07	19.8	19.2
172	258	2	0.40	1.67	2.48	1.63	26	25.6
174	276	2.5	0.28	2.42	3.60	2.37	22.7	22.2
174	276	2.5	0.36	1.86	2.77	1.82	30	29.1
178	322	3	0.35	1.94	2.89	1.90	50.8	49.7
180	220	2	0.17	3.91	5.83	3.83	5.8	5.62
182	248	2	0.25	2.66	3.96	2.60	12.7	12.3
182	248	2	0.34	1.98	2.95	1.94	17.7	17.4
182	248	2	0.31	2.16	3.22	2.12	17.4	17.1
182	268	2	0.31	2.15	3.21	2.11	21.5	20.8
182	268	2	0.39	1.74	2.59	1.70	27.2	26.8
188	292	3	0.28	2.39	3.56	2.34	28	27.3
188	292	3	0.36	1.87	2.79	1.83	36.8	35.7
188	342	3	0.34	1.96	2.91	1.91	59.8	58.5
190	240	2	0.19	3.52	5.25	3.45	8.21	7.95
192	268	2	0.26	2.59	3.85	2.53	16.7	16.1
192	268	2	0.35	1.91	2.85	1.87	23.3	22.9
192	268	2	0.33	2.04	3.04	2.00	23	22.6
194	286	2.5	0.32	2.11	3.15	2.07	25.1	24.2
194	286	2.5	0.39	1.72	2.56	1.68	34.3	33.8
198	302	3	0.27	2.49	3.70	2.43	29.3	28.6
198	302	3	0.35	1.91	2.84	1.86	39	37.8
198	362	3	0.34	1.97	2.93	1.92	70	68.5
200	250	2	0.18	3.81	5.67	3.73	8.6	8.34
202	278	2	0.26	2.65	3.94	2.59	17.7	17.1
202	278	2	0.33	2.03	3.02	1.98	24.3	23.9
202	278	2	0.31	2.16	3.22	2.12	23	22.6
204	306	2.5	0.33	2.07	3.09	2.03	35.3	34.2
204	306	2.5	0.40	1.69	2.51	1.65	42.8	42.2
208	322	3	0.27	2.47	3.68	2.42	36.6	35.8
208	322	3	0.36	1.89	2.82	1.85	47.6	46.2
212	378	4	0.34	1.97	2.94	1.93	81	79.3
212	268	2	0.17	3.91	5.82	3.82	12.1	11.7
212	298	2	0.26	2.59	3.85	2.53	22.7	21.9
212	298	2	0.35	1.94	2.89	1.90	31	30.5

Note: An oil groove is provided for outer rings of bearings with an outer diameter (D dimension) of 320 mm or more. See page **B-234** on dimensions. We can make bearings with oil hole or oil groove in the outer ring, per your request, for an outer diameter of 320mm or less. Such bearings are indicated by attaching "**D1**" to the end of the bearing number. (ex. **23032BD1**)

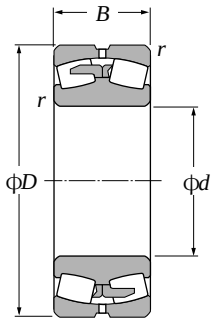

Cylindrical bore

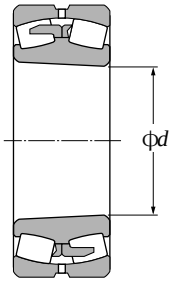

Tapered bore

d 200～280mm

Boundary dimensions mm				Basic load ratings dynamic kN		Basic load ratings static kgf		Limiting speeds min^{-1}		Bearing numbers[3]	
d	D	B	$r_{s\,min}$[2]	C_r	C_{or}	C_r	C_{or}	grease	oil	cylindrical bore	tapered[1] bore
200	340	112	3	1 350	2 270	137 000	231 000	920	1 200	**23140B**	**23140BK**
	340	140	3	1 630	2 900	166 000	295 000	920	1 200	**24140B**	**24140BK30**
	360	98	4	1 310	2 010	134 000	205 000	1 100	1 500	**22240B**	**22240BK**
	360	128	4	1 610	2 640	165 000	269 000	920	1 200	**23240B**	**23240BK**
	420	138	5	2 040	3 050	208 000	310 000	850	1 100	**22340B**	**22340BK**
220	300	60	2.1	565	1 170	57 500	119 000	1 100	1 400	**23944**	**23944K**
	340	90	3	1 060	1 920	108 000	195 000	1 000	1 300	**23044B**	**23044BK**
	340	118	3	1 350	2 570	138 000	262 000	920	1 200	**24044B**	**24044BK30**
	370	120	4	1 540	2 670	157 000	272 000	850	1 100	**23144B**	**23144BK**
	370	150	4	1 880	3 400	192 000	345 000	850	1 100	**24144B**	**24144BK30**
	400	108	4	1 580	2 460	161 000	251 000	1 000	1 300	**22244B**	**22244BK**
	400	144	4	2 010	3 350	205 000	340 000	770	1 000	**23244B**	**23244BK**
	460	145	5	2 350	3 500	240 000	360 000	770	1 000	**22344B**	**22344BK**
240	320	60	2.1	565	1 190	58 000	121 000	1 000	1 300	**23948**	**23948K**
	360	92	3	1 130	2 140	116 000	219 000	920	1 200	**23048B**	**23048BK**
	360	118	3	1 410	2 770	144 000	282 000	850	1 100	**24048B**	**24048BK30**
	400	128	4	1 730	3 050	177 000	310 000	770	1 000	**23148B**	**23148BK**
	400	160	4	2 110	3 800	215 000	390 000	770	1 000	**24148B**	**24148BK30**
	440	120	4	1 940	3 100	198 000	315 000	920	1 200	**22248B**	**22248BK**
	440	160	4	2 430	4 100	247 000	420 000	720	940	**23248B**	**23248BK**
	500	155	5	2 720	4 100	278 000	420 000	720	930	**22348B**	**22348BK**
260	360	75	2.1	760	1 580	77 500	161 000	920	1 200	**23952**	**23952K**
	400	104	4	1 420	2 620	144 000	267 000	850	1 100	**23052B**	**23052BK**
	400	140	4	1 830	3 550	186 000	365 000	750	980	**24052B**	**24052BK30**
	440	144	4	2 140	3 850	219 000	395 000	710	920	**23152B**	**23152BK**
	440	180	4	2 510	4 600	256 000	470 000	710	920	**24152B**	**24152BK30**
	480	130	5	2 230	3 600	228 000	365 000	850	1 100	**22252B**	**22252BK**
	480	174	5	2 760	4 700	281 000	480 000	660	860	**23252B**	**23252BK**
	540	165	6	3 100	4 750	320 000	485 000	650	850	**22352B**	**22352BK**
280	380	75	2.1	830	1 750	84 500	179 000	850	1 100	**23956**	**23956K**
	420	106	4	1 510	2 920	154 000	297 000	770	1 000	**23056B**	**23056BK**
	420	140	4	1 950	3 950	199 000	405 000	690	900	**24056B**	**24056BK30**
	460	146	5	2 300	4 250	234 000	435 000	650	850	**23156B**	**23156BK**
	460	180	5	2 730	5 200	278 000	530 000	650	850	**24156B**	**24156BK30**
	500	130	5	2 310	3 800	236 000	390 000	770	1 000	**22256B**	**22256BK**

1) Bearings appended with "**K**" have a tapered bore ratio of 1:12; bearings appended with "**K30**" have a tapered bore ratio of 1:30.
2) Smallest allowable dimension for chamfer dimension r.

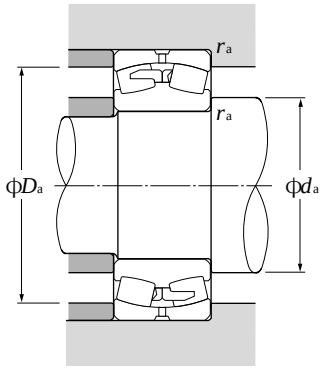

Equivalent radial load
dynamic

$P_r = XF_r + YF_a$

$\frac{F_a}{F_r} \leqq e$		$\frac{F_a}{F_r} > e$	
X	Y	X	Y
1	Y_1	0.67	Y_2

static

$P_{or} = F_r + Y_o F_a$

For values of e, Y_2 and Y_o see the table below.

Abutment and fillet dimensions mm			Constant	Axial load factors			Mass (approx.) kg	
d_a min	D_a max	r_{as} max	e	Y_1	Y_2	Y_o	cylindrical bore	tapered bore
214	326	2.5	0.33	2.05	3.05	2.00	43.3	42
214	326	2.5	0.41	1.64	2.44	1.60	53.4	52.6
218	342	3	0.28	2.45	3.64	2.39	44	43
218	342	3	0.36	1.88	2.79	1.83	57.2	55.5
222	398	4	0.34	1.98	2.95	1.94	93.2	91.2
232	288	2	0.19	3.62	5.39	3.54	13.1	12.7
234	326	2.5	0.26	2.59	3.85	2.53	29.9	28.8
234	326	2.5	0.34	1.97	2.94	1.93	40.2	39.6
238	352	3	0.33	2.07	3.09	2.03	53.3	51.6
238	352	3	0.41	1.66	2.47	1.62	67	66
238	382	3	0.27	2.46	3.66	2.40	60.4	59.1
238	382	3	0.36	1.85	2.76	1.81	80	77.6
242	438	4	0.33	2.06	3.07	2.02	117	115
252	308	2	0.16	4.13	6.15	4.04	14	13.6
254	346	2.5	0.25	2.69	4.01	2.63	33.4	32.2
254	346	2.5	0.32	2.09	3.12	2.05	43	42.3
258	382	3	0.32	2.11	3.15	2.07	65.8	63.8
258	382	3	0.40	1.69	2.51	1.65	82.2	80.9
258	422	3	0.28	2.43	3.62	2.38	81.7	80
258	422	3	0.37	1.83	2.72	1.79	108	105
262	478	4	0.32	2.10	3.13	2.06	148	145
272	348	2	0.19	3.53	5.26	3.45	24	23.3
278	382	3	0.26	2.63	3.92	2.57	48.5	46.8
278	382	3	0.34	1.96	2.91	1.91	65.2	64.1
278	422	3	0.33	2.05	3.06	2.01	91.4	88.6
278	422	3	0.41	1.63	2.43	1.60	114	112
282	458	4	0.28	2.45	3.64	2.39	106	104
282	458	4	0.37	1.83	2.72	1.79	141	137
288	512	5	0.32	2.13	3.18	2.09	183	179
292	368	2	0.17	3.88	5.78	3.79	26.4	25.6
298	402	3	0.25	2.73	4.06	2.67	52.4	50.6
298	402	3	0.33	2.06	3.07	2.02	69	67.9
302	438	4	0.32	2.13	3.18	2.09	97.7	94.6
302	438	4	0.39	1.73	2.58	1.69	120	118
302	478	4	0.26	2.57	3.83	2.51	112	110

Note: Please refer to page **B-234** for outer ring oil inlet and oil groove dimensions.

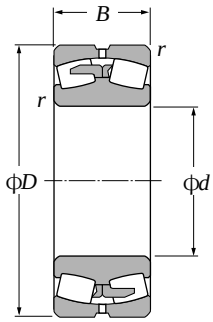

Cylindrical bore

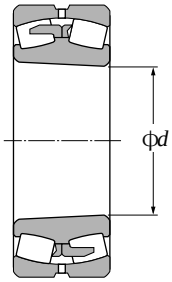

Tapered bore

d 280～380mm

Boundary dimensions mm				Basic load ratings dynamic kN		Basic load ratings static kgf		Limiting speeds min^{-1}		Bearing numbers	
d	D	B	$r_{s\,min}$[2]	C_r	C_{or}	C_r	C_{or}	grease	oil	cylindrical bore	tapered[1] bore
280	500	176	5	2 930	5 150	298 000	525 000	610	790	**23256B**	**23256BK**
	580	175	6	3 500	5 350	360 000	545 000	600	780	**22356B**	**22356BK**
300	420	90	3	1 110	2 320	113 000	237 000	770	1 000	**23960**	**23960K**
	460	118	4	1 890	3 550	193 000	365 000	720	940	**23060B**	**23060BK**
	460	160	4	2 450	4 950	250 000	505 000	650	840	**24060B**	**24060BK30**
	500	160	5	2 750	5 000	280 000	510 000	600	780	**23160B**	**23160BK**
	500	200	5	3 300	6 400	340 000	650 000	600	780	**24160B**	**24160BK30**
	540	140	5	2 670	4 350	272 000	440 000	720	930	**22260B**	**22260BK**
	540	192	5	3 450	6 000	355 000	615 000	560	730	**23260B**	**23260BK**
	620	185	7.5	3 600	5 400	365 000	550 000	550	720	**22360B**	**22360BK**
320	440	90	3	1 140	2 460	116 000	251 000	720	930	**23964**	**23964K**
	480	121	4	1 960	3 850	200 000	395 000	680	880	**23064B**	**23064BK**
	480	160	4	2 510	5 200	255 000	530 000	600	780	**24064B**	**24064BK30**
	540	176	5	3 100	5 800	320 000	590 000	560	730	**23164B**	**23164BK**
	540	218	5	3 850	7 300	390 000	745 000	560	730	**24164B**	**24164BK30**
	580	150	5	3 100	5 050	315 000	515 000	660	860	**22264B**	**22264BK**
	580	208	5	4 000	7 050	410 000	720 000	520	680	**23264B**	**23264BK**
340	460	90	3	1 220	2 650	124 000	270 000	650	870	**23968**	**23968K**
	520	133	5	2 310	4 550	235 000	465 000	630	820	**23068B**	**23068BK**
	520	180	5	3 000	6 200	305 000	630 000	550	720	**24068B**	**24068BK30**
	580	190	5	3 600	6 600	365 000	670 000	520	680	**23168B**	**23168BK**
	580	243	5	4 600	8 950	470 000	910 000	520	680	**24168B**	**24168BK30**
	620	224	6	4 450	8 000	455 000	815 000	490	630	**23268B**	**23268BK**
360	480	90	3	1 320	2 930	135 000	298 000	630	820	**23972**	**23972K**
	540	134	5	2 370	4 700	242 000	480 000	590	770	**23072B**	**23072BK**
	540	180	5	3 100	6 600	320 000	675 000	520	680	**24072B**	**24072BK30**
	600	192	5	3 750	7 050	385 000	715 000	490	630	**23172B**	**23172BK**
	600	243	5	4 600	9 150	470 000	935 000	490	630	**24172B**	**24172BK30**
	650	232	6	4 850	8 700	495 000	885 000	450	590	**23272B**	**23272BK**
380	520	106	4	1 560	3 550	159 000	360 000	590	770	**23976**	**23976K**
	560	135	5	2 510	5 150	256 000	525 000	550	720	**23076B**	**23076BK**
	560	180	5	3 250	7 100	330 000	725 000	490	640	**24076B**	**24076BK30**
	620	194	5	3 900	7 500	400 000	765 000	450	590	**23176B**	**23176BK**
	620	243	5	4 800	9 650	490 000	985 000	450	590	**24176B**	**24176BK30**

1) Bearings appended with "**K**" have a tapered bore ratio of 1:12; bearings appended with "**K30**" have a tapered bore ratio of 1:30.
2) Smallest allowable dimension for chamfer dimension r.

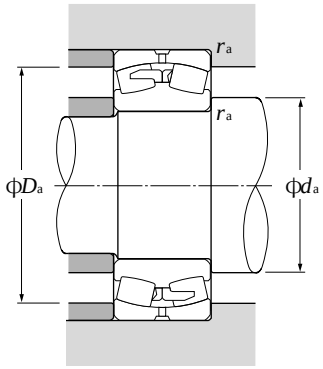

Equivalent radial load
dynamic

$P_r = XF_r + YF_a$

$\frac{F_a}{F_r} \leqq e$		$\frac{F_a}{F_r} > e$	
X	Y	X	Y
1	Y_1	0.67	Y_2

static

$P_{or} = F_r + Y_o F_a$

For values of e, Y_2 and Y_o see the table below.

Abutment and fillet dimensions mm			Constant	Axial load factors			Mass (approx.) kg	
d_a min	D_a max	r_{as} max	e	Y_1	Y_2	Y_o	cylindrical bore	tapered bore
302	478	4	0.36	1.90	2.83	1.86	150	145
308	552	5	0.31	2.16	3.22	2.12	224	220
314	406	2.5	0.20	3.34	4.98	3.27	40	38.7
318	442	3	0.25	2.66	3.96	2.60	72.4	70.2
318	442	3	0.34	1.97	2.93	1.92	98	96.4
322	478	4	0.32	2.11	3.15	2.07	131	127
322	478	4	0.40	1.69	2.51	1.65	161	159
322	518	4	0.26	2.57	3.83	2.51	141	138
322	518	4	0.36	1.88	2.79	1.83	193	187
336	584	6	0.32	2.13	3.17	2.08	270	265
334	426	2.5	0.19	3.50	5.21	3.42	43	41.7
338	462	3	0.25	2.73	4.06	2.67	78.2	75.5
338	462	3	0.33	2.06	3.07	2.02	103	101
342	518	4	0.33	2.06	3.07	2.02	167	162
342	518	4	0.40	1.67	2.48	1.63	207	204
342	558	4	0.26	2.57	3.83	2.51	172	168
342	558	4	0.36	1.86	2.77	1.82	243	236
354	446	2.5	0.17	3.91	5.83	3.83	44.7	43.3
362	498	4	0.25	2.68	3.99	2.62	104	100
362	498	4	0.34	1.98	2.95	1.94	140	138
362	558	4	0.33	2.05	3.06	2.01	210	204
362	558	4	0.42	1.61	2.39	1.57	269	265
368	592	5	0.37	1.84	2.75	1.80	300	291
374	466	2.5	0.17	3.99	5.93	3.90	47.2	45.7
382	518	4	0.24	2.78	4.14	2.72	110	106
382	518	4	0.33	2.06	3.07	2.02	147	145
382	578	4	0.32	2.11	3.15	2.07	222	215
382	578	4	0.40	1.67	2.48	1.63	281	277
388	622	5	0.36	1.87	2.78	1.83	339	329
398	502	3	0.19	3.54	5.27	3.46	69.9	67.7
402	538	4	0.24	2.87	4.27	2.80	115	111
402	538	4	0.30	2.23	3.32	2.18	153	150
402	598	4	0.31	2.16	3.22	2.12	235	228
402	598	4	0.39	1.73	2.58	1.69	292	287

Note: Please refer to page **B-234** for outer ring oil inlet and oil groove dimensions.

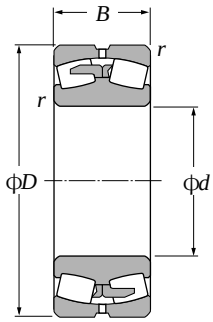

Cylindrical bore

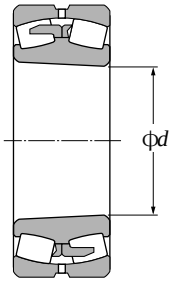

Tapered bore

d 380～500mm

Boundary dimensions mm				Basic load ratings dynamic kN		Basic load ratings static kgf		Limiting speeds min^{-1}		Bearing numbers	
d	D	B	$r_{s\,min}$[2]	C_r	C_{or}	C_r	C_{or}	grease	oil	cylindrical bore	tapered[1] bore
380	680	240	6	5 200	9 650	530 000	985 000	430	550	**23276B**	**23276BK**
400	540	106	4	1 580	3 650	161 000	370 000	550	720	**23980**	**23980K**
	600	148	5	2 980	6 050	305 000	615 000	520	680	**23080B**	**23080BK**
	600	200	5	3 850	8 400	390 000	855 000	460	600	**24080B**	**24080BK30**
	650	200	6	4 200	8 050	425 000	820 000	430	560	**23180B**	**23180BK**
	650	250	6	5 100	10 300	520 000	1 060 000	430	560	**24180B**	**24180BK30**
	720	256	6	5 850	10 600	595 000	1 080 000	400	520	**23280B**	**23280BK**
420	560	106	4	1 630	3 850	166 000	390 000	530	690	**23984**	**23984K**
	620	150	5	3 100	6 400	315 000	650 000	490	640	**23084B**	**23084BK**
	620	200	5	3 850	8 450	395 000	865 000	440	570	**24084B**	**24084BK30**
	700	224	6	5 200	9 950	530 000	1 020 000	410	530	**23184B**	**23184BK**
	700	280	6	6 150	12 200	625 000	1 240 000	410	530	**24184B**	**24184BK30**
	760	272	7.5	6 550	12 000	665 000	1 230 000	380	490	**23284B**	**23284BK**
440	600	118	4	2 030	4 700	207 000	480 000	500	650	**23988**	**23988K**
	650	157	6	3 300	6 850	335 000	695 000	470	610	**23088B**	**23088BK**
	650	212	6	4 300	9 450	440 000	960 000	420	540	**24088B**	**24088BK30**
	720	226	6	5 200	10 100	530 000	1 030 000	390	500	**23188B**	**23188BK**
	720	280	6	6 450	13 100	660 000	1 330 000	390	500	**24188B**	**24188BK30**
	790	280	7.5	6 900	12 800	705 000	1 310 000	360	470	**23288B**	**23288BK**
460	620	118	4	2 100	4 950	214 000	505 000	480	620	**23992**	**23992K**
	680	163	6	3 600	7 450	365 000	760 000	450	580	**23092B**	**23092BK**
	680	218	6	4 600	10 200	470 000	1 040 000	390	510	**24092B**	**24092BK30**
	760	240	7.5	5 700	11 400	585 000	1 160 000	360	470	**23192B**	**23192BK**
	760	300	7.5	7 100	14 500	725 000	1 480 000	360	470	**24192B**	**24192BK30**
	830	296	7.5	7 750	14 500	790 000	1 470 000	340	440	**23292B**	**23292BK**
480	650	128	5	2 330	5 500	238 000	565 000	450	590	**23996**	**23996K**
	700	165	6	3 650	7 700	370 000	785 000	420	550	**23096B**	**23096BK**
	700	218	6	4 650	10 500	475 000	1 070 000	380	490	**24096B**	**24096BK30**
	790	248	7.5	6 200	12 300	635 000	1 260 000	350	450	**23196B**	**23196BK**
	790	308	7.5	7 450	15 300	760 000	1 560 000	350	450	**24196B**	**24196BK30**
	870	310	7.5	8 300	15 500	845 000	1 580 000	320	420	**23296B**	**23296BK**
500	670	128	5	2 370	5 600	242 000	570 000	430	560	**239/500**	**239/500K**
	720	167	6	3 850	8 300	390 000	845 000	410	530	**230/500B**	**230/500BK**

1) Bearings appended with "**K**" have a tapered bore ratio of 1:12; bearings appended with "**K30**" have a tapered bore ratio of 1:30.
2) Smallest allowable dimension for chamfer dimension r.

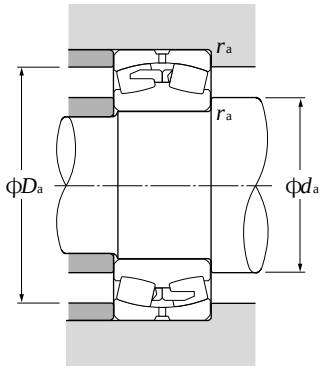

Equivalent radial load
dynamic

$P_r = XF_r + YF_a$

$\frac{F_a}{F_r} \leqq e$		$\frac{F_a}{F_r} > e$	
X	Y	X	Y
1	Y_1	0.67	Y_2

static

$P_{or} = F_r + Y_o F_a$

For values of e, Y_2 and Y_o see the table below.

Abutment and fillet dimensions mm			Constant	Axial load factors			Mass (approx.) kg	
d_a min	D_a max	r_{as} max	e	Y_1	Y_2	Y_o	cylindrical bore	tapered bore
408	652	5	0.36	1.89	2.82	1.85	380	369
418	522	3	0.18	3.71	5.53	3.63	73	70.7
422	578	4	0.24	2.80	4.16	2.73	149	144
422	578	4	0.32	2.09	3.11	2.04	202	200
428	622	5	0.31	2.21	3.28	2.16	264	256
428	622	5	0.38	1.77	2.63	1.73	329	324
428	692	5	0.37	1.81	2.69	1.77	457	443
438	542	3	0.17	3.95	5.88	3.86	76.2	73.8
442	598	4	0.24	2.85	4.24	2.78	157	152
442	598	4	0.32	2.13	3.18	2.09	210	207
448	672	5	0.32	2.11	3.15	2.07	354	343
448	672	5	0.40	1.69	2.51	1.65	440	433
456	724	6	0.36	1.86	2.77	1.82	544	528
458	582	3	0.18	3.66	5.46	3.58	101	98
468	622	5	0.24	2.85	4.24	2.78	181	175
468	622	5	0.32	2.11	3.15	2.07	245	241
468	692	5	0.31	2.15	3.21	2.11	370	358
468	692	5	0.39	1.75	2.61	1.71	456	449
476	754	6	0.36	1.88	2.80	1.84	600	582
478	602	3	0.17	3.95	5.88	3.86	107	104
488	652	5	0.23	2.88	4.29	2.82	206	200
488	652	5	0.31	2.15	3.21	2.11	276	272
496	724	6	0.31	2.14	3.19	2.10	443	429
496	724	6	0.39	1.71	2.55	1.67	550	541
496	794	6	0.36	1.87	2.78	1.83	704	683
502	628	4	0.18	3.85	5.73	3.76	123	119
508	672	5	0.23	2.94	4.38	2.88	217	209
508	672	5	0.30	2.22	3.30	2.17	285	280
516	754	6	0.31	2.15	3.21	2.11	492	477
516	754	6	0.39	1.74	2.59	1.70	608	600
516	834	6	0.36	1.87	2.78	1.83	814	790
522	648	4	0.17	4.02	5.98	3.93	131	127
528	692	5	0.23	2.98	4.44	2.91	226	218

Note: Please refer to page **B-234** for outer ring oil inlet and oil groove dimensions.

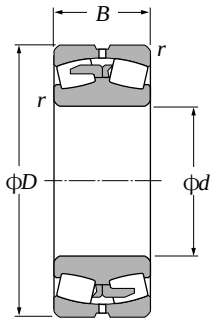

Cylindrical bore

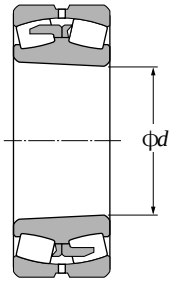

Tapered bore

d 500～670mm

Boundary dimensions mm				Basic load ratings dynamic kN		Basic load ratings static kgf		Limiting speeds min^{-1}		Bearing numbers	
d	D	B	$r_{s\,min}$ [2]	C_r	C_{or}	C_r	C_{or}	grease	oil	cylindrical bore	tapered [1] bore
500	720	218	6	4 750	10 900	485 000	1 110 000	350	460	**240/500B**	**240/500BK30**
	830	264	7.5	6 950	13 700	705 000	1 400 000	330	430	**231/500B**	**231/500BK**
	830	325	7.5	8 050	16 700	825 000	1 700 000	330	430	**241/500B**	**241/500BK30**
	920	336	7.5	9 400	17 800	960 000	1 820 000	310	400	**232/500B**	**232/500BK**
530	710	136	5	2 640	6 450	269 000	655 000	400	520	**239/530**	**239/530K**
	780	185	6	4 400	9 350	445 000	955 000	380	490	**230/530B**	**230/530BK**
	780	250	6	5 600	12 700	570 000	1 290 000	330	430	**240/530B**	**240/530BK30**
	870	272	7.5	7 000	14 200	715 000	1 450 000	310	400	**231/530B**	**231/530BK**
	870	335	7.5	8 300	17 400	850 000	1 770 000	310	400	**241/530B**	**241/530BK30**
	980	355	9.5	10 400	19 800	1 060 000	2 020 000	280	370	**232/530B**	**232/530BK**
560	750	140	5	2 830	6 700	288 000	680 000	380	490	**239/560**	**239/560K**
	820	195	6	4 800	10 500	490 000	1 070 000	350	450	**230/560B**	**230/560BK**
	820	258	6	6 100	14 100	620 000	1 440 000	310	400	**240/560B**	**240/560BK30**
	920	280	7.5	7 650	15 500	780 000	1 580 000	280	370	**231/560B**	**231/560BK**
	920	355	7.5	9 950	20 800	1 010 000	2 120 000	280	370	**241/560B**	**241/560BK30**
	1 030	365	9.5	11 100	21 100	1 130 000	2 150 000	260	340	**232/560B**	**232/560BK**
600	800	150	5	3 150	7 800	325 000	795 000	350	450	**239/600**	**239/600K**
	870	200	6	5 250	12 000	535 000	1 220 000	310	420	**230/600B**	**230/600BK**
	870	272	6	6 450	15 600	655 000	1 590 000	280	370	**240/600B**	**240/600BK30**
	980	300	7.5	9 000	18 400	920 000	1 880 000	260	340	**231/600B**	**231/600BK**
	980	375	7.5	10 700	23 200	1 090 000	2 360 000	260	340	**241/600B**	**241/600BK30**
	1 090	388	9.5	12 200	23 700	1 240 000	2 420 000	250	320	**232/600B**	**232/600BK**
630	850	165	6	3 700	9 250	375 000	945 000	320	420	**239/630**	**239/630K**
	920	212	7.5	5 900	13 000	600 000	1 330 000	310	400	**230/630B**	**230/630BK**
	920	290	7.5	7 550	17 900	770 000	1 830 000	270	350	**240/630B**	**240/630BK30**
	1 030	315	7.5	9 600	19 900	975 000	2 030 000	250	320	**231/630B**	**231/630BK**
	1 030	400	7.5	11 600	25 000	1 180 000	2 550 000	250	320	**241/630B**	**241/630BK30**
	1 150	412	12	13 700	26 800	1 400 000	2 740 000	230	300	**232/630B**	**232/630BK**
670	900	170	6	4 100	10 300	420 000	1 050 000	300	390	**239/670**	**239/670K**
	980	230	7.5	6 550	14 600	665 000	1 490 000	280	360	**230/670B**	**230/670BK**
	980	308	7.5	8 650	20 600	885 000	2 100 000	250	320	**240/670B**	**240/670BK30**
	1 090	336	7.5	11 000	22 800	1 120 000	2 330 000	230	300	**231/670B**	**231/670BK**
	1 090	412	7.5	12 700	28 000	1 300 000	2 850 000	230	300	**241/670B**	**241/670BK30**
	1 220	438	12	16 100	32 000	1 640 000	3 250 000	220	280	**232/670B**	**232/670BK**

1）Bearings appended with "**K**" have a tapered bore ratio of 1:12; bearings appended with "**K30**" have a tapered bore ratio of 1:30.
2）Smallest allowable dimension for chamfer dimension r.

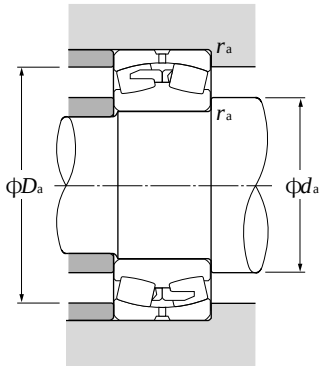

Equivalent radial load

dynamic

$P_r = XF_r + YF_a$

$\frac{F_a}{F_r} \leqq e$		$\frac{F_a}{F_r} > e$	
X	Y	X	Y
1	Y_1	0.67	Y_2

static

$P_{or} = F_r + Y_o F_a$

For values of e, Y_2 and Y_o see the table below.

Abutment and fillet dimensions mm			Constant	Axial load factors			Mass (approx.) kg	
d_a min	D_a max	r_{as} max	e	Y_1	Y_2	Y_o	cylindrical bore	tapered bore
528	692	5	0.30	2.28	3.40	2.23	295	290
536	794	6	0.32	2.12	3.16	2.08	584	566
536	794	6	0.39	1.72	2.57	1.69	716	705
536	884	6	0.39	1.74	2.59	1.70	1 000	971
552	688	4	0.17	3.94	5.87	3.86	157	152
558	752	5	0.22	3.03	4.52	2.97	306	295
558	752	5	0.30	2.24	3.33	2.19	413	406
566	834	6	0.30	2.22	3.30	2.17	653	633
566	834	6	0.38	1.79	2.67	1.75	800	788
574	936	8	0.39	1.74	2.59	1.70	1 200	1 170
582	728	4	0.16	4.09	6.09	4.00	182	176
588	792	5	0.22	3.03	4.51	2.96	353	340
588	792	5	0.30	2.29	3.40	2.24	467	459
596	884	6	0.30	2.27	3.38	2.22	752	729
596	884	6	0.39	1.75	2.61	1.71	948	934
604	986	8	0.36	1.88	2.80	1.84	1 360	1 320
622	778	4	0.18	3.85	5.73	3.76	218	211
628	842	5	0.21	3.17	4.72	3.10	400	386
628	842	5	0.29	2.33	3.47	2.28	544	535
636	944	6	0.30	2.22	3.30	2.17	908	880
636	944	6	0.37	1.81	2.70	1.77	1 130	1 110
644	1 046	8	0.36	1.86	2.77	1.82	1 540	1 490
658	822	5	0.18	3.66	5.45	3.58	277	268
666	884	6	0.22	3.14	4.67	3.07	481	464
666	884	6	0.30	2.28	3.40	2.23	657	646
666	994	6	0.30	2.27	3.38	2.22	1 050	1 020
666	994	6	0.38	1.78	2.66	1.74	1 330	1 310
684	1 096	10	0.36	1.87	2.78	1.83	1 900	1 840
698	872	5	0.18	3.76	5.59	3.67	317	307
706	944	6	0.22	3.07	4.57	3.00	594	573
706	944	6	0.29	2.29	3.41	2.24	794	781
706	1 054	6	0.30	2.22	3.30	2.17	1 250	1 210
706	1 054	6	0.37	1.83	2.73	1.79	1 530	1 510
724	1 166	10	0.36	1.89	2.81	1.85	2 270	2 200

Note: Please refer to page **B-234** for outer ring oil inlet and oil groove dimensions.

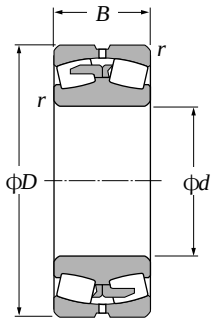

Cylindrical bore

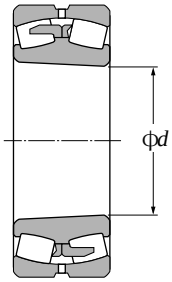

Tapered bore

d 710～1060mm

Boundary dimensions mm				Basic load ratings dynamic kN		Basic load ratings static kgf		Limiting speeds min^{-1}		Bearing numbers	
d	D	B	$r_{s\,min}$ 2)	C_r	C_{or}	C_r	C_{or}	grease	oil	cylindrical bore	tapered 1) bore
710	950	180	6	4 450	11 500	450 000	1 170 000	280	370	**239/710**	**239/710K**
	1 030	236	7.5	7 200	16 200	730 000	1 650 000	260	340	**230/710B**	**230/710BK**
	1 030	315	7.5	9 300	22 500	945 000	2 300 000	230	300	**240/710B**	**240/710BK30**
	1 150	345	9.5	11 600	24 900	1 190 000	2 540 000	220	280	**231/710B**	**231/710BK**
	1 150	438	9.5	14 500	32 000	1 470 000	3 250 000	220	280	**241/710B**	**241/710BK30**
	1 280	450	12	16 300	32 500	1 660 000	3 300 000	200	260	**232/710B**	**232/710BK**
750	1 000	185	6	5 000	13 000	510 000	1 330 000	260	340	**239/750**	**239/750K**
	1 090	250	7.5	8 150	18 300	835 000	1 860 000	250	320	**230/750B**	**230/750BK**
	1 090	335	7.5	10 100	24 600	1 030 000	2 500 000	220	280	**240/750B**	**240/750BK30**
	1 220	365	9.5	12 800	27 200	1 310 000	2 780 000	200	260	**231/750B**	**231/750BK**
	1 360	475	15	18 200	36 500	1 860 000	3 750 000	180	240	**232/750B**	**232/750BK**
800	1 060	195	6	5 400	13 700	550 000	1 400 000	240	310	**239/800**	**239/800K**
	1 150	258	7.5	8 400	19 500	860 000	1 990 000	220	290	**230/800B**	**230/800BK**
	1 150	345	7.5	11 200	27 800	1 140 000	2 840 000	200	260	**240/800B**	**240/800BK30**
	1 280	375	9.5	14 400	31 000	1 460 000	3 150 000	180	240	**231/800B**	**231/800BK**
850	1 120	200	6	5 850	15 100	595 000	1 540 000	220	290	**239/850**	**239/850K**
	1 220	272	7.5	9 750	22 700	995 000	2 310 000	210	270	**230/850B**	**230/850BK**
	1 220	365	7.5	12 500	31 500	1 270 000	3 200 000	180	240	**240/850B**	**240/850BK30**
	1 360	400	12	15 500	34 000	1 580 000	3 500 000	170	220	**231/850B**	**231/850BK**
900	1 180	206	6	6 650	17 300	675 000	1 770 000	210	270	**239/900**	**239/900K**
	1 280	280	7.5	10 300	24 700	1 050 000	2 520 000	190	250	**230/900B**	**230/900BK**
	1 280	375	7.5	13 200	33 500	1 350 000	3 450 000	170	220	**240/900B**	**240/900BK30**
	1 420	412	12	16 800	38 000	1 720 000	3 850 000	150	200	**231/900B**	**231/900BK**
950	1 250	224	7.5	7 750	20 500	790 000	2 090 000	190	250	**239/950**	**239/950K**
	1 360	300	7.5	11 500	28 400	1 180 000	2 900 000	180	230	**230/950B**	**230/950BK**
	1 360	412	7.5	15 500	40 000	1 580 000	4 100 000	160	210	**240/950B**	**240/950BK30**
1000	1 320	236	7.5	8 600	22 700	875 000	2 310 000	180	230	**239/1000**	**239/1000K**
	1 420	308	7.5	12 400	30 000	1 260 000	3 050 000	170	220	**230/1000B**	**230/1000BK**
	1 420	412	7.5	16 000	42 000	1 640 000	4 250 000	150	190	**240/1000B**	**240/1000BK30**
1060	1 400	250	7.5	9 300	24 700	950 000	2 520 000	160	210	**239/1060**	**239/1060K**
	1 500	325	9.5	13 600	33 500	1 390 000	3 400 000	150	200	**230/1060B**	**230/1060BK**
	1 500	438	9.5	17 800	47 000	1 810 000	4 800 000	140	180	**240/1060B**	**240/1060BK30**

1) Bearings appended with "**K**" have a tapered bore ratio of 1:12; bearings appended with "**K30**" have a tapered bore ratio of 1:30.
2) Smallest allowable dimension for chamfer dimension r.

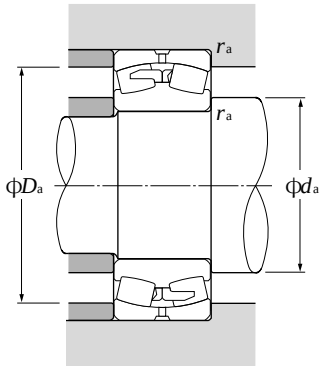

Equivalent radial load
dynamic

$P_r = XF_r + YF_a$

$\frac{F_a}{F_r} \leqq e$		$\frac{F_a}{F_r} > e$	
X	Y	X	Y
1	Y_1	0.67	Y_2

static

$P_{or} = F_r + Y_o F_a$

For values of e, Y_2 and Y_o see the table below.

Abutment and fillet dimensions mm			Constant	Axial load factors			Mass (approx.) kg	
d_a min	D_a max	r_{as} max	e	Y_1	Y_2	Y_o	cylindrical bore	tapered bore
738	922	5	0.18	3.85	5.73	3.76	375	363
746	994	6	0.22	3.02	4.50	2.96	663	640
746	994	6	0.29	2.36	3.51	2.31	884	870
754	1 106	8	0.29	2.32	3.45	2.27	1 420	1 380
754	1 106	8	0.37	1.80	2.69	1.76	1 800	1 770
764	1 226	10	0.35	1.91	2.84	1.87	2 540	2 470
778	972	5	0.17	3.90	5.81	3.81	412	399
786	1 054	6	0.21	3.20	4.76	3.13	790	763
786	1 054	6	0.29	2.35	3.49	2.29	1 060	1 040
794	1 176	8	0.29	2.32	3.45	2.27	1 700	1 650
814	1 296	12	0.35	1.92	2.86	1.88	3 050	2 960
828	1 032	5	0.17	4.05	6.04	3.96	487	471
836	1 114	6	0.21	3.15	4.69	3.08	890	859
836	1 114	6	0.28	2.41	3.59	2.36	1 190	1 170
844	1 236	8	0.29	2.32	3.45	2.27	1 890	1 830
878	1 092	5	0.16	4.25	6.32	4.15	550	532
886	1 184	6	0.20	3.32	4.95	3.25	1 050	1 010
886	1 184	6	0.28	2.42	3.61	2.37	1 410	1 390
904	1 306	10	0.28	2.37	3.54	2.32	2 270	2 200
928	1 152	5	0.16	4.32	6.44	4.23	623	603
936	1 244	6	0.20	3.32	4.95	3.25	1 170	1 130
936	1 244	6	0.27	2.48	3.70	2.43	1 570	1 540
954	1 366	10	0.28	2.42	3.60	2.36	2 500	2 420
986	1 214	6	0.16	4.20	6.26	4.11	774	749
986	1 324	6	0.21	3.26	4.85	3.18	1 430	1 380
986	1 324	6	0.28	2.39	3.56	2.34	1 970	1 940
1 036	1 284	6	0.16	4.21	6.26	4.11	916	887
1 036	1 384	6	0.20	3.37	5.02	3.29	1 580	1 520
1 036	1 384	6	0.27	2.51	3.73	2.45	2 110	2 080
1 096	1 364	6	0.16	4.28	6.37	4.19	1 090	1 060
1 104	1 456	8	0.20	3.36	5.00	3.28	1 850	1 790
1 104	1 456	8	0.27	2.49	3.71	2.44	2 450	2 140

Note: Please refer to page **B-234** for outer ring oil inlet and oil groove dimensions.

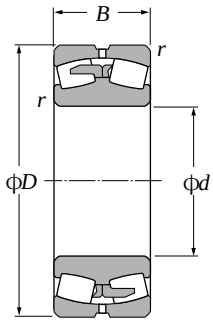

Cylindrical bore

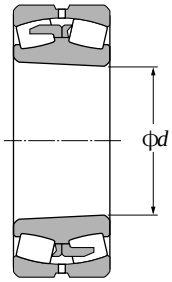

Tapered bore

d 1120～1400mm

Boundary dimensions mm				Basic load ratings dynamic kN		Basic load ratings static kgf		Limiting speeds min^{-1}		Bearing numbers	
d	D	B	$r_{s\,min}$[2]	C_r	C_{or}	C_r	C_{or}	grease	oil	cylindrical bore	tapered[1] bore
1120	1 460	250	7.5	9 850	26 700	1 000 000	2 720 000	150	200	**239/1120**	**239/1120K**
	1 580	345	9.5	15 600	39 000	1 590 000	4 000 000	150	190	**230/1120B**	**230/1120BK**
	1 580	462	9.5	19 500	52 500	1 990 000	5 350 000	120	160	**240/1120B**	**240/1120BK30**
1180	1 540	272	7.5	11 000	29 800	1 120 000	3 050 000	140	180	**239/1180**	**239/1180K**
1250	1 630	280	7.5	12 100	33 500	1 230 000	3 400 000	120	160	**239/1250**	**239/1250K**
1320	1 720	300	7.5	13 600	38 000	1 390 000	3 900 000	120	150	**239/1320**	**239/1320K**
1400	1 820	315	9.5	15 100	43 000	1 540 000	4 400 000	100	130	**239/1400**	**239/1400K**

1）"**K**" indicates bearings have tapered bore with a taper ratio of 1: 12.
2）Smallest allowable dimension for chamfer dimension r.

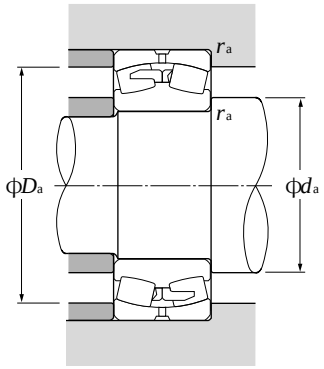

Equivalent radial load
dynamic

$P_r = XF_r + YF_a$

$\frac{F_a}{F_r} \leqq e$		$\frac{F_a}{F_r} > e$	
X	Y	X	Y
1	Y_1	0.67	Y_2

static

$P_{or} = F_r + Y_o F_a$

For values of e, Y_2 and Y_o see the table below.

Abutment and fillet dimensions mm			**Constant**	**Axial load factors**			**Mass** (approx.) kg	
d_a min	D_a max	r_{as} max	e	Y_1	Y_2	Y_o	cylindrical bore	tapered bore
1 156	1 424	6	0.15	4.42	6.58	4.32	1 140	1 100
1 164	1 536	8	0.21	3.29	4.80	3.21	2 160	2 090
1 164	1 536	8	0.27	2.50	3.72	2.44	2 890	2 840
1 216	1 504	6	0.15	4.40	6.55	4.30	1 390	1 340
1 286	1 594	6	0.15	4.42	6.58	4.32	1 600	1 550
1 356	1 684	6	0.16	4.34	6.46	4.24	1 900	1 840
1 444	1 776	8	0.15	4.39	6.54	4.29	2 230	2 160

Note: Please refer to page **B-234** for outer ring oil inlet and oil groove dimensions.

(For spherical roller bearings)

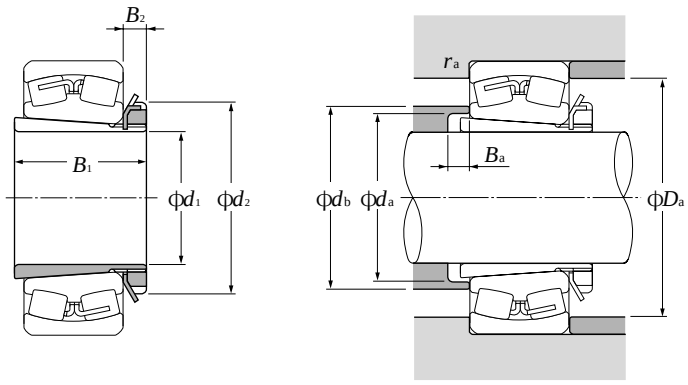

d_1 35 ～ 70mm

Boundary dimensions mm				Bearing numbers	Abutment and fillet dimensions mm						Mass[1] kg
d_1	B_1	d_2	B_2		d_a min	d_b max	B_a min	D_a min	D_a max	r_{as} max	(approx.)
35	36	58	10	LH-22208CK;**H 308X**	44	50	5	—	73	1	0.189
	36	58	10	21308CK;**H 308X**	44	54	5	—	81.5	1.5	0.189
	46	58	10	22308CK;**H2308X**	45	52	5	—	81.5	1.5	0.224
40	39	65	11	LH-22209CK;**H 309X**	49	57	8	—	78	1	0.248
	39	65	11	21309CK;**H 309X**	49	61	5	—	91.5	1.5	0.248
	50	65	11	22309CK;**H2309X**	50	58	5	—	91.5	1.5	0.28
45	42	70	12	LH-22210CK;**H 310X**	54	63	10	—	83	1	0.303
	42	70	12	21310CK;**H 310X**	54	67	5	—	100	2	0.303
	55	70	12	22310CK;**H2310X**	56	65	5	—	100	2	0.362
50	45	75	12	LH-22211EK;**H 311X**	60	67	11	89.5	91.5	1.5	0.345
	45	75	12	LH-22211BK;**H 311X**	60	67	11	—	91.5	1.5	0.345
	45	75	12	21311K ;**H 311X**	60	73	6	—	110	2	0.345
	59	75	12	22311BK;**H2311X**	61	71	6	—	110	2	0.42
55	47	80	13	LH-22212EK;**H 312X**	65	72	9	98	101.5	1.5	0.394
	47	80	13	LH-22212BK;**H 312X**	65	72	9	—	101.5	1.5	0.394
	47	80	13	21312K ;**H 312X**	65	79	5	—	118	2	0.394
	62	80	13	22312BK;**H2312X**	66	77	5	—	118	2	0.481
60	50	85	14	LH-22213EK;**H 313X**	70	78.5	8	107	111.5	1.5	0.458
	50	85	14	LH-22213BK;**H 313X**	70	78.5	9	—	111.5	1.5	0.458
	50	85	14	21313K ;**H 313X**	70	85	5	—	128	2	0.458
	65	85	14	22313BK;**H2313X**	72	84	5	—	128	2	0.557
65	55	98	15	LH-22215EK;**H 315X**	80	89	12	117.5	121.5	1.5	0.831
	55	98	15	LH-22215BK;**H 315X**	80	89	12	—	121.5	1.5	0.831
	55	98	15	21315K ;**H 315X**	80	97	5	—	148	2	0.831
	73	98	15	22315BK;**H2315X**	82	96	5	—	148	2	1.05
70	59	105	17	LH-22216EK;**H 316X**	86	94.5	12	125.5	130	2	1.03
	59	105	17	LH-22216BK;**H 316X**	86	94.5	12	—	130	2	1.03
	59	105	17	21316K ;**H 316X**	86	103	5	—	158	2	1.03
	78	105	17	22316BK;**H2316X**	87	103	5	—	158	2	1.28

1) Indicates adapter mass.

Note: 1. Please refer to page **B-236 to B-239** for bearing dimensions, rated loads, and mass.
2. Please refer to page **C-2 to C-10** and **C-12 to C-14** for adapter locknut and washer dimensions.
3. Adapter numbers with the suffix "**X**" signify narrow slit type adapters, and use washers with straight inner tabs.

(For spherical roller bearings)

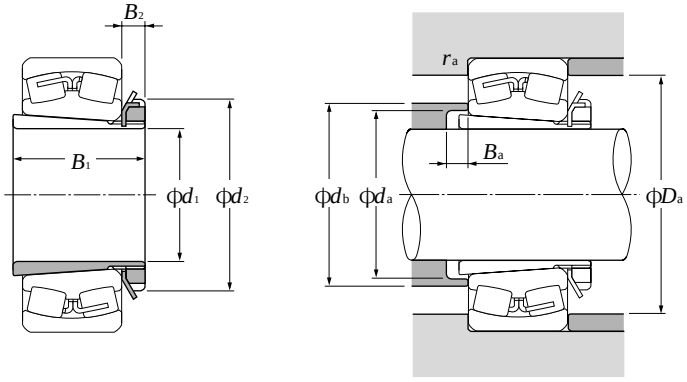

d_1 75～115mm

Boundary dimensions mm				Bearing numbers	Abutment and fillet dimensions mm						Mass[1] kg
					d_a	d_b	B_a	D_a		r_{as}	
d_1	B_1	d_2	B_2		min	max	min	min	max	max	(approx.)
75	63	110	18	LH-22217EK;**H 317X**	91	100.5	12	135	140	2	1.18
	63	110	18	LH-22217BK;**H 317X**	91	100.5	12	—	140	2	1.18
	63	110	18	21317K ;**H 317X**	91	110	6	—	166	2.5	1.18
	82	110	18	22317BK;**H2317X**	94	110	6	—	166	2.5	1.45
80	65	120	18	LH-22218EK;**H 318X**	96	107.5	10	144	150	2	1.37
	65	120	18	LH-22218BK;**H 318X**	96	107.5	10	—	150	2	1.37
	86	120	18	23218BK;**H2318X**	99	110	18	—	150	2	1.69
	65	120	18	21318K ;**H 318X**	96	116	6	—	176	2.5	1.37
	86	120	18	22318BK;**H2318X**	99	117	6	—	176	2.5	1.69
85	68	125	19	22219BK;**H 319X**	102	117	9	—	158	2	1.56
	68	125	19	21319K ;**H 319X**	102	123	7	—	186	2.5	1.56
	90	125	19	22319BK;**H2319X**	105	123	7	—	186	2.5	1.92
90	71	130	20	22220BK;**H 320X**	107	123	8	—	168	2	1.69
	97	130	20	23220BK;**H2320X**	110	122	19	—	168	2	2.15
	71	130	20	21320K ;**H 320X**	107	130	7	—	201	2.5	1.69
	97	130	20	22320BK;**H2320X**	110	129	7	—	201	2.5	2.15
100	81	145	21	23122BK;**H3122X**	117	127	7	—	170	2	2.25
	77	145	21	22222BK;**H 322X**	117	137	6	—	188	2	2.18
	105	145	21	23222BK;**H2322X**	121	135	17	—	188	2	2.74
	77	145	21	21322K ;**H 322X**	117	142	9	—	226	2.5	2.18
	105	145	21	22322BK;**H2322X**	121	142	7	—	226	2.5	2.74
110	72	145	22	23024BK;**H3024X**	127	136	7	—	170	2	1.93
	88	155	22	23124BK;**H3124X**	128	140	7	—	190	2	2.64
	88	155	22	22224BK;**H3124X**	128	150	11	—	203	2	2.64
	112	155	22	23224BK;**H2324X**	131	147	17	—	203	2	3.19
	112	155	22	22324BK;**H2324X**	131	154	7	—	246	2.5	3.19
115	80	155	23	23026BK;**H3026**	137	147	8	—	190	2	2.85
	92	165	23	23126BK;**H3126**	138	152	8	—	200	2	3.66
	92	165	23	22226BK;**H3126**	138	161	8	—	216	2.5	3.66
	121	165	23	23226BK;**H2326**	142	160	21	—	216	2.5	4.6

1) Indicates adapter mass.

Note: 1. Please refer to page **B-238 to B-241** for bearing dimensions, rated loads, and mass.
2. Please refer to page **C-2 to C-10** and **C-12 to C-14** for adapter locknut and washer dimensions.
3. Adapter numbers with the suffix "**X**" signify narrow slit type adapters, and use washers with straight inner tabs.

(For spherical roller bearings)

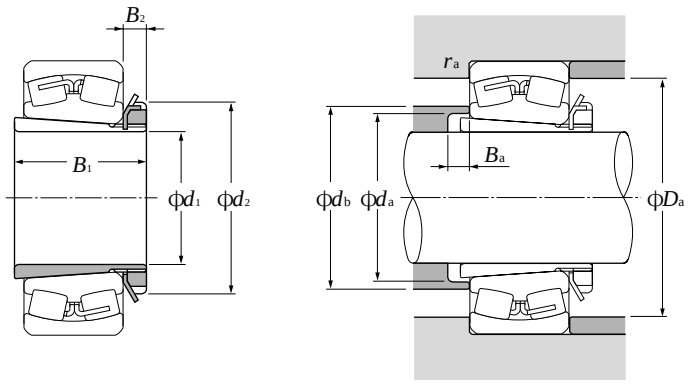

d_1 115～170mm

Boundary dimensions mm				Bearing numbers	Abutment and fillet dimensions mm					Mass[1] kg
d_1	B_1	d_2	B_2		d_a min	d_b max	B_a min	D_a max	r_{as} max	(approx.)
115	121	165	23	22326BK;**H2326**	142	167	8	262	3	4.6
	82	165	24	23028BK;**H3028**	147	158	8	200	2	3.16
	97	180	24	23128BK;**H3128**	149	165	8	213	2	4.34
125	97	180	24	22228BK;**H3128**	149	173	8	236	2.5	4.34
	131	180	24	23228BK;**H2328**	152	172	22	236	2.5	5.55
	131	180	24	22328BK;**H2328**	152	179	8	282	3	5.55
	87	180	26	23030BK;**H3030**	158	170	8	213	2	3.89
	111	195	26	23130BK;**H3130**	160	178	8	238	2	5.52
135	111	195	26	22230BK;**H3130**	160	188	15	256	2.5	5.52
	139	195	26	23230BK;**H2330**	163	185	20	256	2.5	6.63
	139	195	26	22330BK;**H2330**	163	192	8	302	3	6.63
	93	190	28	23032BK;**H3032**	168	181	8	228	2	5.21
	119	210	28	23132BK;**H3132**	170	190	8	258	2	7.67
140	119	210	28	22232BK;**H3132**	170	200	14	276	2.5	7.67
	147	210	28	23232BK;**H2332**	174	198	18	276	2.5	9.14
	147	210	28	22332BK;**H2332**	174	205	8	322	3	9.14
	101	200	29	23034BK;**H3034**	179	193	8	248	2	5.99
	122	220	29	23134BK;**H3134**	180	202	8	268	2	8.38
150	122	220	29	22234BK;**H3134**	180	212	10	292	3	8.38
	154	220	29	23234BK;**H2334**	185	218	18	292	3	10.2
	154	220	29	22334BK;**H2334**	185	218	8	342	3	10.2
	109	210	30	23036BK;**H3036**	189	204	8	268	2	6.83
	131	230	30	23136BK;**H3136**	191	215	8	286	2.5	9.5
160	131	230	30	22236BK;**H3136**	191	225	18	302	3	9.5
	161	230	30	23236BK;**H2336**	195	223	22	302	3	11.3
	161	230	30	22336BK;**H2336**	195	230	8	362	3	11.3
	112	220	31	23038BK;**H3038**	199	215	9	278	2	7.45
	141	240	31	23138BK;**H3138**	202	228	9	306	2.5	10.8
170	141	240	31	22238BK;**H3138**	202	238	21	322	3	10.8
	169	240	31	23238BK;**H2338**	206	236	21	322	3	12.6
	169	240	31	22338BK;**H2338**	206	243	9	378	4	12.6

1) Indicates adapter mass.

Note: 1. Please refer to page **B-240 to B-243** for bearing dimensions, rated loads, and mass.
2. Please refer to page **C-2 to C-10** and **C-12 to C-14** for adapter locknut and washer dimensions.

(For spherical roller bearings)

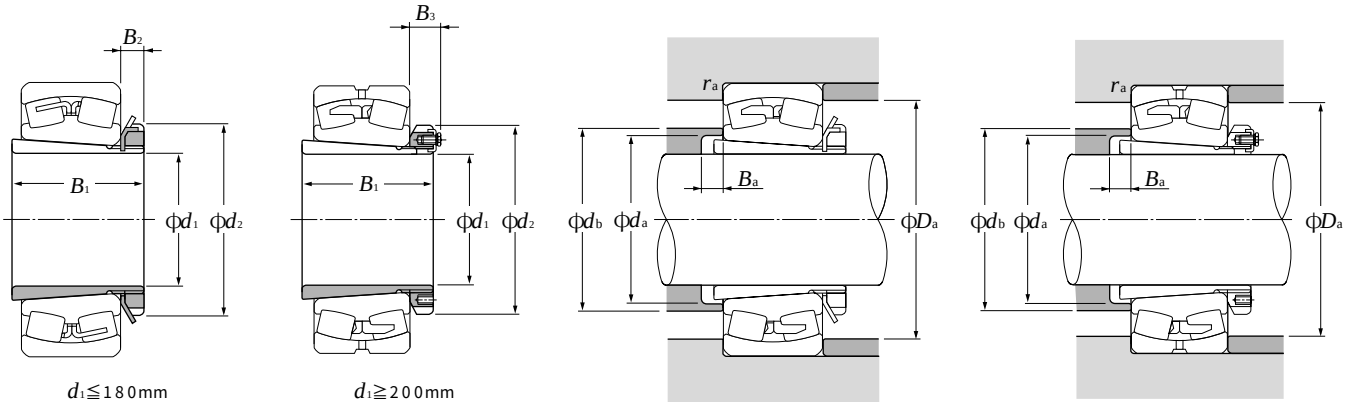

$d_1 \leqq 180$mm　　$d_1 \geqq 200$mm

d_1 180～300mm

Boundary dimensions mm					Bearing numbers	Abutment and fillet dimensions mm					Mass[1] kg
d_1	B_1	d_2	B_2	B_3		d_a min	d_b max	B_a min	D_a max	r_{as} max	(approx.)
180	120	240	32	—	23040BK;**H3040**	210	227	10	298	2	9.19
	150	250	32	—	23140BK;**H3140**	212	240	10	326	2.5	12.1
	150	250	32	—	22240BK;**H3140**	212	250	24	342	3	12.1
	176	250	32	—	23240BK;**H2340**	216	248	20	342	3	13.9
	176	250	32	—	22340BK;**H2340**	216	255	10	398	4	13.9
200	126	260	—	41	23044BK;**H3044**	231	250	12	326	2.5	10.2
	158	280	—	44	23144BK;**H3144**	233	264	10	352	3	14.7
	158	280	—	44	22244BK;**H3144**	233	274	22	382	3	14.7
	183	280	—	44	23244BK;**H2344**	236	271	11	382	3	16.7
	183	280	—	44	22344BK;**H2344**	236	278	10	438	4	16.7
220	133	290	—	46	23048BK;**H3048**	251	272	11	346	2.5	13.2
	169	300	—	46	23148BK;**H3148**	254	288	11	382	3	17.3
	169	300	—	46	22248BK;**H3148**	254	298	19	422	3	17.3
	196	300	—	46	23248BK;**H2348**	257	295	6	422	3	19.7
	196	300	—	46	22348BK;**H2348**	257	302	11	478	4	19.7
240	145	310	—	46	23052BK;**H3052**	272	295	13	382	3	15.1
	187	330	—	49	23152BK;**H3152**	276	313	11	422	3	22
	187	330	—	49	22252BK;**H3152**	276	323	25	458	4	22
	208	330	—	49	23252BK;**H2352**	278	319	2	458	4	24.2
	208	330	—	49	22352BK;**H2352**	278	326	11	512	5	24.2
260	152	330	—	50	23056BK;**H3056**	292	317	12	402	3	17.7
	192	350	—	51	23156BK;**H3156**	296	336	12	438	4	24.5
	192	350	—	51	22256BK;**H3156**	296	346	28	478	4	24.5
	221	350	—	51	23256BK;**H2356**	299	343	11	478	4	27.8
	221	350	—	51	22356BK;**H2356**	299	350	12	552	5	27.8
280	168	360	—	54	23060BK;**H3060**	313	340	12	442	3	22.8
	208	380	—	53	23160BK;**H3160**	317	361	12	478	4	30.2
	208	380	—	53	22260BK;**H3160**	317	371	32	518	4	30.2
	240	380	—	53	23260BK;**H3260**	321	368	12	518	4	34.1
300	171	380	—	55	23064BK;**H3064**	334	363	13	462	3	24.6
	226	400	—	56	23164BK;**H3164**	339	384	13	518	4	34.9
	226	400	—	56	22264BK;**H3164**	339	394	39	558	4	34.9

1）Indicates adapter mass.

Note: 1. Please refer to page **B-242 to B-247** for bearing dimensions, rated loads, and mass.
2. Please refer to page **C-2 to C-10** and **C-12 to C-14** for adapter locknut and washer dimensions.

(For spherical roller bearings)

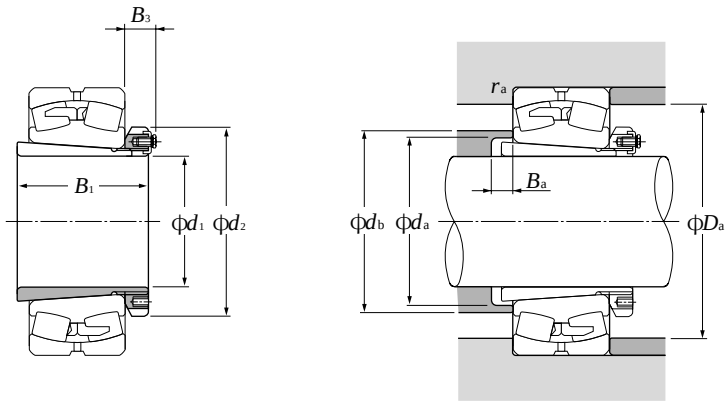

d_1 300～470mm

Boundary dimensions mm				Bearing numbers	Abutment and fillet dimensions mm					Mass[1] kg
d_1	B_1	d_2	B_3		d_a min	d_b max	B_a min	D_a max	r_{as} max	(approx.)
300	258	400	56	23264BK;**H3264**	343	393	13	558	4	39.3
320	187	400	58	23068BK;**H3068**	355	386	14	498	4	28.7
	254	440	72	23168BK;**H3168**	360	409	14	558	4	49.5
	288	440	72	23268BK;**H3268**	364	421	14	592	5	54.6
340	188	420	58	23072BK;**H3072**	375	408	14	518	4	30.5
	259	460	75	23172BK;**H3172**	380	432	14	578	4	54.2
	299	460	75	23272BK;**H3272**	385	442	14	622	5	60.2
360	193	450	62	23076BK;**H3076**	396	431	15	538	4	35.8
	264	490	77	23176BK;**H3176**	401	456	15	598	4	61.7
	310	490	77	23276BK;**H3276**	405	465	15	652	5	69.6
380	210	470	66	23080BK;**H3080**	417	454	15	578	4	41.3
	272	520	82	23180BK;**H3180**	421	479	15	622	5	70.6
	328	520	82	23280BK;**H3280**	427	488	15	692	5	81
400	212	490	66	23084BK;**H3084**	437	476	16	598	4	43.7
	304	540	90	23184BK;**H3184**	443	504	16	672	5	84.2
	352	540	90	23284BK;**H3284**	448	515	16	724	6	94
410	228	520	77	23088BK;**H3088**	458	499	17	622	5	65.2
	307	560	90	23188BK;**H3188**	464	527	17	692	5	104
	361	560	90	23288BK;**H3288**	469	539	17	754	6	118
430	234	540	77	23092BK;**H3092**	478	521	17	652	5	69.5
	326	580	95	23192BK;**H3192**	485	551	17	724	6	116
	382	580	95	23292BK;**H3292**	491	563	17	794	6	132
450	237	560	77	23096BK;**H3096**	499	544	18	672	5	73.3
	335	620	95	23196BK;**H3196**	505	575	18	754	6	133
	397	620	95	23296BK;**H3296**	512	590	18	834	6	152
470	247	580	85	230/500BK;**H30/500**	519	566	18	692	5	81.8
	356	630	100	231/500BK;**H31/500**	527	600	18	794	6	143
	428	630	100	232/500BK;**H32/500**	534	618	18	884	6	166

1) Indicates adapter mass.

Note: 1. Please refer to page **B-242 to B-251** for bearing dimensions, rated loads, and mass.
2. Please refer to page **C-2 to C-10** and **C-12 to C-14** for adapter locknut and washer dimensions.

(For spherical roller bearings)

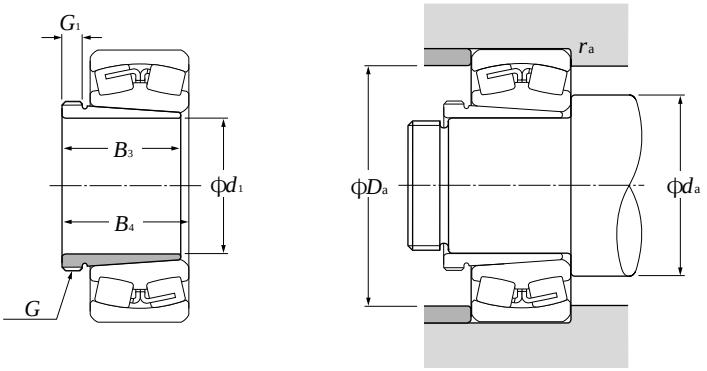

d_1 35～70mm

d_1	Boundary dimensions mm thread[1] G	B_3	G_1	B_4[2]	Bearing numbers	Abutment and fillet dimensions mm d_a min	d_a max	D_a min	D_a max	r_{as} max	Mass[3] kg (approx.)	Appro-priate nut no.[4]
35	M45 × 1.5	29	6	32	LH-22208CK ;**AH 308**	47	—	—	73	1	0.09	AN09
	M45 × 1.5	29	6	32	21308CK ;**AH 308**	48.5	—	—	81.5	1.5	0.09	AN09
	M45 × 1.5	40	7	43	22308CK ;**AH 2308**	48.5	—	—	81.5	1.5	0.128	AN09
40	M50 × 1.5	31	6	34	LH-22209CK ;**AH 309**	52	—	—	78	1	0.109	AN10
	M50 × 1.5	31	6	34	21309CK ;**AH 309**	53.5	—	—	91.5	1.5	0.109	AN10
	M50 × 1.5	44	7	47	22309CK ;**AH 2309**	53.5	—	—	91.5	1.5	0.164	AN10
45	M55 × 2	35	7	38	LH-22210CK ;**AHX 310**	57	—	—	83	1	0.137	AN11
	M55 × 2	35	7	38	21310CK ;**AHX 310**	60	—	—	100	2	0.137	AN11
	M55 × 2	50	9	53	22310CK ;**AHX 2310**	60	—	—	100	2	0.209	AN11
50	M60 × 2	37	7	40	LH-22211EK;**AHX 311**	63.5	67	89.5	91.5	1.5	0.161	AN12
	M60 × 2	37	7	40	LH-22211BK;**AHX 311**	63.5	—	—	91.5	1.5	0.161	AN12
	M60 × 2	37	7	40	21311K ;**AHX 311**	65	—	—	110	2	0.161	AN12
	M60 × 2	54	10	57	22311BK;**AHX 2311**	65	—	—	110	2	0.253	AN12
55	M65 × 2	40	8	43	LH-22212EK ;**AHX 312**	68.5	72	98	101.5	1.5	0.189	AN13
	M65 × 2	40	8	43	LH-22212BK ;**AHX 312**	68.5	—	—	101.5	1.5	0.189	AN13
	M65 × 2	40	8	43	21312K ;**AHX 312**	72	—	—	118	2	0.189	AN13
	M65 × 2	58	11	61	22312BK ;**AHX 2312**	72	—	—	118	2	0.297	AN13
60	M75 × 2	42	8	45	LH-22213EK ;**AH 313**	73.5	78.5	107	111.5	1.5	0.253	AN15
	M75 × 2	42	8	45	LH-22213BK ;**AH 313**	73.5	—	—	111.5	1.5	0.253	AN15
	M75 × 2	42	8	45	21313K ;**AH 313**	77	—	—	128	2	0.253	AN15
	M75 × 2	61	12	64	22313BK ;**AH 2313**	77	—	—	128	2	0.395	AN15
65	M80 × 2	43	8	47	LH-22214EK ;**AH 314**	78.5	83.5	112.5	116.5	1.5	0.28	AN16
	M80 × 2	43	8	47	LH-22214BK ;**AH 314**	78.5	—	—	116.5	1.5	0.28	AN16
	M80 × 2	43	8	47	21314K ;**AH 314**	82	—	—	138	2	0.28	AN16
	M80 × 2	64	12	68	22314BK ;**AHX 2314**	82	—	—	138	2	0.466	AN16
70	M85 × 2	45	8	49	LH-22215EK ;**AH 315**	83.5	89	117.5	121.5	1.5	0.313	AN17
	M85 × 2	45	8	49	LH-22215BK ;**AH 315**	83.5	—	—	121.5	1.5	0.313	AN17
	M85 × 2	45	8	49	21315K ;**AH 315**	87	—	—	148	2	0.313	AN17
	M85 × 2	68	12	72	22315BK ;**AHX 2315**	87	—	—	148	2	0.534	AN17

1) Standard thread shapes and dimensions are as per **JIS B0207** (metric thread).
2) Indicates reference dimensions before attachment of withdrawal sleeve.
3) Indicates withdrawal sleeve mass.
4) Indicates number of nut to be used at time of disassembly. See pages **C-2 to C-10** for nut dimensions.
Note: 1. Please refer to page **B-236, B-239** for bearing dimensions, rated loads, and mass.

(For spherical roller bearings)

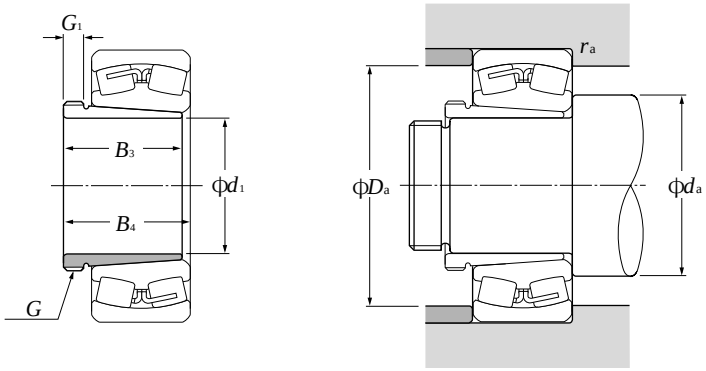

d_1 75～115mm

d_1	Boundary dimensions mm thread[1] G	B_3	G_1	B_4[2]	Bearing numbers	Abutment and fillet dimensions mm d_a min	d_a max	D_a min	D_a max	r_{as} max	Mass[3] kg (approx.)	Appro-priate nut no.[4]
75	M90 × 2	48	8	52	LH-22216EK;**AH 316**	90	94.5	125.5	130	2	0.365	AN18
	M90 × 2	48	8	52	LH-22216BK;**AH 316**	90	—	—	130	2	0.365	AN18
	M90 × 2	48	8	52	21316K ;**AH 316**	92	—	—	158	2	0.365	AN18
	M90 × 2	71	12	75	22316BK;**AHX 2316**	92	—	—	158	2	0.597	AN18
80	M95 × 2	52	9	56	LH-22217EK;**AHX 317**	95	100.5	135	140	2	0.429	AN19
	M95 × 2	52	9	56	LH-22217BK;**AHX 317**	95	—	—	140	2	0.429	AN19
	M95 × 2	52	9	56	21317K ;**AHX 317**	99	—	—	166	2.5	0.429	AN19
	M95 × 2	74	13	78	22317BK;**AHX 2317**	99	—	—	166	2.5	0.67	AN19
85	M100 × 2	53	9	57	LH-22218EK;**AHX 318**	100	107.5	144	150	2	0.461	AN20
	M100 × 2	53	9	57	LH-22218BK;**AHX 318**	100	—	—	150	2	0.461	AN20
	M100 × 2	63	10	67	23218BK;**AHX 3218**	100	—	—	150	2	0.576	AN20
	M100 × 2	53	9	57	21318K ;**AHX 318**	104	—	—	176	2.5	0.461	AN20
	M100 × 2	79	14	83	22318BK;**AHX 2318**	104	—	—	176	2.5	0.779	AN20
90	M105 × 2	57	10	61	22219BK;**AHX 319**	107	—	—	158	2	0.532	AN21
	M105 × 2	57	10	61	21319K ;**AHX 319**	109	—	—	186	2.5	0.532	AN21
	M105 × 2	85	16	89	22319BK;**AHX 2319**	109	—	—	186	2.5	0.886	AN21
95	M110 × 2	59	10	63	22220BK;**AHX 320**	112	—	—	168	2	0.582	AN22
	M110 × 2	73	11	77	23220BK;**AHX 3220**	112	—	—	168	2	0.767	AN22
	M110 × 2	59	10	63	21320K ;**AHX 320**	114	—	—	201	2.5	0.582	AN22
	M110 × 2	90	16	94	22320BK;**AHX 2320**	114	—	—	201	2.5	0.998	AN22
105	M120 × 2	68	11	72	23122BK ;**AHX 3122**	120	—	—	170	2	0.76	AN24
	M115 × 2	82	13	91	24122BK30 ;**AH 24122**	120	—	—	170	2	0.73	AN23
	M120 × 2	68	11	72	22222BK ;**AHX 3122**	122	—	—	188	2	0.76	AN24
	M125 × 2	82	11	86	23222BK ;**AHX 3222**	122	—	—	188	2	1.04	AN25
	M120 × 2	63	12	67	21322K ;**AHX 322**	124	—	—	226	2.5	0.663	AN24
	M125 × 2	98	16	102	22322BK ;**AHX 2322**	124	—	—	226	2.5	1.35	AN25
115	M130 × 2	60	13	64	23024BK ;**AHX 3024**	130	—	—	170	2	0.75	AN26
	M125 × 2	73	13	82	24024BK30 ;**AH 24024**	130	—	—	170	2	0.65	AN25
	M125 × 2	73	13	82	24024CK30 ;**AH 24024**	130	—	—	170	2	0.65	AN25
	M130 × 2	75	12	79	23124BK ;**AHX 3124**	130	—	—	190	2	0.95	AN26

1) Standard thread shapes and dimensions are as per **JIS B0207** (metric thread).
2) Indicates reference dimensions before attachment of withdrawal sleeve.
3) Indicates withdrawal sleeve mass.
4) Indicates number of nut to be used at time of disassembly. See pages **C-2 to C-10** for nut dimensions.
Note: 1. Please refer to page **B-238, B-241** for bearing dimensions, rated loads, and mass.

(For spherical roller bearings)

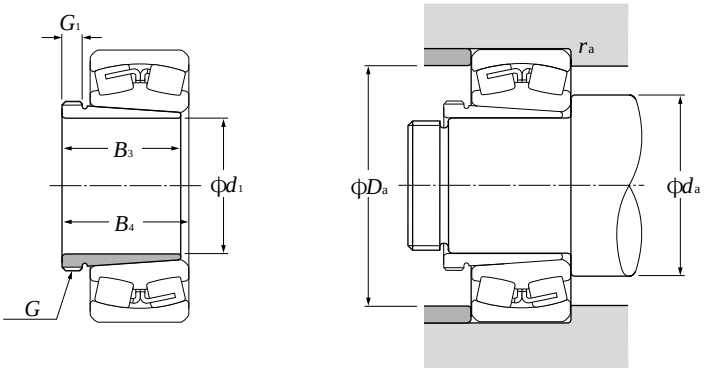

d_1 115～150mm

Boundary dimensions mm					Bearing numbers	Abutment and fillet dimensions mm			Mass[3] kg	Appro-priate nut no.[4]
d_1	thread[1] G	B_3	G_1	B_4[2]		d_a min	D_a max	r_{as} max	(approx.)	
115	M130 × 2	93	13	102	24124BK30 ; **AH 24124**	130	190	2	1	AN26
	M130 × 2	75	12	79	22224BK ; **AHX 3124**	132	203	2	0.95	AN26
	M135 × 2	90	13	94	23224BK ; **AHX 3224**	132	203	2	1.3	AN27
	M135 × 2	105	17	109	22324BK ; **AHX 2324**	134	246	2.5	1.6	AN27
125	M140 × 2	67	14	71	23026BK ; **AHX 3026**	140	190	2	0.93	AN28
	M135 × 2	83	14	93	24026BK30 ; **AH 24026**	140	190	2	0.84	AN27
	M135 × 2	83	14	93	24026CK30 ; **AH 24026**	140	190	2	0.84	AN27
	M140 × 2	78	12	82	23126BK ; **AHX 3126**	140	200	2	1.08	AN28
	M140 × 2	94	14	104	24126BK30 ; **AH 24126**	140	200	2	1.11	AN28
	M140 × 2	78	12	82	22226BK ; **AHX 3126**	144	216	2.5	1.08	AN28
	M145 × 2	98	15	102	23226BK ; **AHX 3226**	144	216	2.5	1.58	AN29
	M145 × 2	115	19	119	22326BK ; **AHX 2326**	148	262	3	1.97	AN29
135	M150 × 2	68	14	73	23028BK ; **AHX 3028**	150	200	2	1.01	AN30
	M145 × 2	83	14	93	24028BK30 ; **AH 24028**	150	200	2	0.91	AN29
	M145 × 2	83	14	93	24028CK30 ; **AH 24028**	150	200	2	0.91	AN29
	M150 × 2	83	14	88	23128BK ; **AHX 3128**	152	213	2	1.28	AN30
	M150 × 2	99	14	109	24128BK30 ; **AH 24128**	152	213	2	1.25	AN30
	M150 × 2	83	14	88	22228BK ; **AHX 3128**	154	236	2.5	1.28	AN30
	M155 × 3	104	15	109	23228BK ; **AHX 3228**	154	236	2.5	1.84	AN31
	M155 × 3	125	20	130	22328BK ; **AHX 2328**	158	282	3	2.33	AN31
145	M160 × 3	72	15	77	23030BK ; **AHX 3030**	162	213	2	1.15	AN32
	M155 × 3	90	15	101	24030BK30 ; **AH 24030**	162	213	2	1.04	AN31
	M155 × 3	90	15	101	24030CK30 ; **AH 24030**	162	213	2	1.04	AN31
	M165 × 3	96	15	101	23130BK ; **AHX 3130**	162	238	2	1.79	AN33
	M160 × 3	115	15	126	24130BK30 ; **AH 24130**	162	238	2	1.56	AN32
	M165 × 3	96	15	101	22230BK ; **AHX 3130**	164	256	2.5	1.79	AN33
	M165 × 3	114	17	119	23230BK ; **AHX 3230**	164	256	2.5	2.22	AN33
	M165 × 3	135	24	140	22330BK ; **AHX 2330**	168	302	3	2.82	AN33
150	M170 × 3	77	16	82	23032BK ; **AH 3032**	172	228	2	2.06	AN34
	M170 × 3	95	15	106	24032BK30 ; **AH 24032**	172	228	2	2.33	AN34
	M170 × 3	95	15	106	24032CK30 ; **AH 24032**	172	228	2	2.33	AN34
	M180 × 3	103	16	108	23132BK ; **AH 3132**	172	258	2	3.21	AN36

1) Standard thread shapes and dimensions are as per **JIS B0207** (metric thread).
2) Indicates reference dimensions before attachment of withdrawal sleeve.
3) ndicates withdrawal sleeve mass.
4) Indicates number of nut to be used at time of disassembly. See pages **C-2 to C-10** for nut dimensions.
Note: 1. Please refer to page **B-240, B-243** for bearing dimensions, rated loads, and mass.

(For spherical roller bearings)

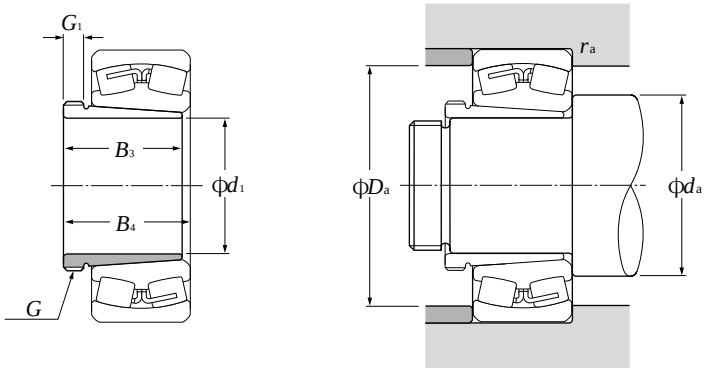

d_1 150～190mm

Boundary dimensions mm					Bearing numbers	Abutment and fillet dimensions mm			Mass[3] kg	Appro-priate nut no.[4]
d_1	thread[1] G	B_3	G_1	B_4[2]		d_a min	D_a max	r_{as} max	(approx.)	
150	M170 × 3	124	15	135	24132BK30 ;**AH 24132**	172	258	2	3	AN34
	M180 × 3	103	16	108	22232BK ;**AH 3132**	174	276	2.5	3.21	AN36
	M180 × 3	124	20	130	23232BK ;**AH 3232**	174	276	2.5	4.08	AN36
	M180 × 3	140	24	146	22332BK ;**AH 2332**	178	322	3	4.72	AN36
160	M180 × 3	85	17	90	23034BK ;**AH 3034**	182	248	2	2.43	AN36
	M180 × 3	106	16	117	24034BK30 ;**AH 24034**	182	248	2	2.8	AN36
	M180 × 3	106	16	117	24034CK30 ;**AH 24034**	182	248	2	2.8	AN36
	M190 × 3	104	16	109	23134BK ;**AH 3134**	182	268	2	3.4	AN38
	M180 × 3	125	16	136	24134BK30 ;**AH 24134**	182	268	2	3.21	AN36
	M190 × 3	104	16	109	22234BK ;**AH 3134**	188	292	3	3.4	AN38
	M190 × 3	134	24	140	23234BK ;**AH 3234**	188	292	3	4.8	AN38
	M190 × 3	146	24	152	22334BK ;**AH 2334**	188	342	3	5.25	AN38
170	M190 × 3	92	17	98	23036BK ;**AH 3036**	192	268	2	2.81	AN38
	M190 × 3	116	16	127	24036BK30 ;**AH 24036**	192	268	2	3.1	AN38
	M190 × 3	116	16	127	24036CK30 ;**AH 24036**	192	268	2	3.1	AN38
	M200 × 3	116	19	122	23136BK ;**AH 3136**	194	286	2.5	4.22	AN40
	M190 × 3	134	16	145	24136BK30 ;**AH 24136**	194	286	2.5	3.68	AN38
	M200 × 3	105	17	110	22236BK ;**AH 2236**	198	302	3	3.73	AN40
	M200 × 3	140	24	146	23236BK ;**AH 3236**	198	302	3	5.32	AN40
	M200 × 3	154	26	160	22336BK ;**AH 2336**	198	362	3	5.83	AN40
180	Tr205 × 4	96	18	102	23038BK ;**AH 3038**	202	278	2	3.32	HNL41
	M200 × 3	118	18	131	24038BK30 ;**AH 24038**	202	278	2	3.5	AN40
	M200 × 3	118	18	131	24038CK30 ;**AH 24038**	202	278	2	3.5	AN40
	Tr210 × 4	125	20	131	23138BK ;**AH 3138**	204	306	2.5	4.89	HN42
	M200 × 3	146	18	159	24138BK30 ;**AH 24138**	204	306	2.5	4.28	AN40
	Tr210 × 4	112	18	117	22238BK ;**AH 2238**	208	322	3	4.25	HN42
	Tr210 × 4	145	25	152	23238BK ;**AH 3238**	208	322	3	5.9	HN42
	Tr210 × 4	160	26	167	22338BK ;**AH 2338**	212	378	4	6.63	HN42
190	Tr215 × 4	102	19	108	23040BK ;**AH 3040**	212	298	2	3.8	HNL43
	Tr210 × 4	127	18	140	24040BK30 ;**AH 24040**	212	298	2	3.93	HN42
	Tr220 × 4	134	21	140	23140BK ;**AH 3140**	214	326	2.5	5.49	HN44
	Tr210 × 4	158	18	171	24140BK30 ;**AH 24140**	214	326	2.5	5.1	HN42

1) Standard thread shapes and dimensions are as per **JIS B0207** (metric thread).
2) Indicates reference dimensions before attachment of withdrawal sleeve.
3) Indicates withdrawal sleeve mass.
4) Indicates number of nut to be used at time of disassembly. See pages **C-2 to C-10** for nut dimensions.
Note: 1. Please refer to page **B-242, B-245** for bearing dimensions, rated loads, and mass.

(For spherical roller bearings)

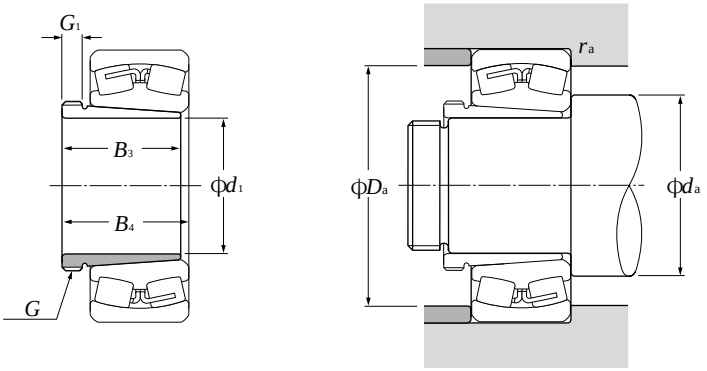

d_1 190～260mm

Boundary dimensions mm					Bearing numbers	Abutment and fillet dimensions mm			Mass[3] kg	Appro-priate nut no.[4]
d_1	thread[1] G	B_3	G_1	B_4[2]		d_a min	D_a max	r_{as} max	(approx.)	
190	Tr220 × 4	118	19	123	22240BK ;**AH 2240**	218	342	3	4.68	HN44
	Tr220 × 4	153	25	160	23240BK ;**AH 3240**	218	342	3	6.68	HN44
	Tr220 × 4	170	30	177	22340BK ;**AH 2340**	222	398	4	7.54	HN44
200	Tr235 × 4	111	20	117	23044BK ;**AH 3044**	234	326	2.5	7.4	HNL47
	Tr230 × 4	138	20	152	24044BK30 ;**AH 24044H**	234	326	2.5	8.25	HN46
	Tr240 × 4	145	23	151	23144BK ;**AH 3144**	238	352	3	10.4	HN48
	Tr230 × 4	170	20	184	24144BK30 ;**AH 24144H**	238	352	3	10.2	HN46
	Tr240 × 4	130	20	136	22244BK ;**AH 2244**	238	382	3	9.1	HN48
	Tr240 × 4	181	30	189	23244BK ;**AH 2344**	238	382	3	13.5	HN48
	Tr240 × 4	181	30	189	22344BK ;**AH 2344**	242	438	4	13.5	HN48
220	Tr260 × 4	116	21	123	23048BK ;**AH 3048**	254	346	2.5	8.75	HNL52
	Tr250 × 4	138	20	153	24048BK30 ;**AH 24048H**	254	346	2.5	8.98	HN50
	Tr260 × 4	154	25	161	23148BK ;**AH 3148**	258	382	3	12	HN52
	Tr260 × 4	180	20	195	24148BK30 ;**AH 24148H**	258	382	3	12.5	HN52
	Tr260 × 4	144	21	150	22248BK ;**AH 2248**	258	422	3	11.1	HN52
	Tr260 × 4	189	30	197	23248BK ;**AH 2348**	258	422	3	15.5	HN52
	Tr260 × 4	189	30	197	22348BK ;**AH 2348**	262	478	4	15.5	HN52
240	Tr280 × 4	128	23	135	23052BK ;**AH 3052**	278	382	3	10.7	HNL56
	Tr270 × 4	162	22	178	24052BK30 ;**AH 24052**	278	382	3	11.8	HN54
	Tr290 × 4	172	26	179	23152BK ;**AH 3152**	278	422	3	16.2	HN58
	Tr280 × 4	202	22	218	24152BK30 ;**AH 24152H**	278	422	3	15.4	HN56
	Tr290 × 4	155	23	161	22252BK ;**AH 2252**	282	458	4	14	HN58
	Tr290 × 4	205	30	213	23252BK ;**AH 2352**	282	458	4	19.6	HN58
	Tr290 × 4	205	30	213	22352BK ;**AH 2352**	288	512	5	19.6	HN58
260	Tr300 × 4	131	24	139	23056BK ;**AH 3056**	298	402	3	12	HNL60
	Tr290 × 4	162	22	179	24056BK30 ;**AH 24056H**	298	402	3	12.8	HN58
	Tr310 × 5	175	28	183	23156BK ;**AH 3156**	302	438	4	17.5	HN62
	Tr300 × 4	202	22	219	24156BK30 ;**AH 24156H**	302	438	4	16.3	HN60
	Tr310 × 5	155	24	163	22256BK ;**AH 2256**	302	478	4	15.2	HN62
	Tr310 × 5	212	30	220	23256BK ;**AH 2356**	302	478	4	21.6	HN62
	Tr310 × 5	212	30	220	22356BK ;**AH 2356**	308	552	5	21.6	HN62

1) Standard thread shapes and dimensions are as per **JIS B0207** (metric thread).
2) Indicates reference dimensions before attachment of withdrawal sleeve.
3) Indicates withdrawal sleeve mass.
4) Indicates number of nut to be used at time of disassembly. See pages **C-2 to C-10** for nut dimensions.

Note: 1. Please refer to page **B-244, B-247** for bearing dimensions, rated loads, and mass.
2. Withdrawal sleeve numbers appended with the suffix "**H**" signify high pressure oil (hydraulic) design. (See page **B-227**)

(For spherical roller bearings)

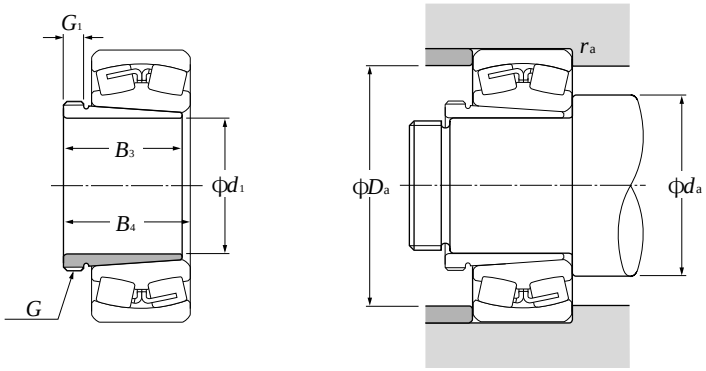

d_1 280～400mm

Boundary dimensions mm					Bearing numbers	Abutment and fillet dimensions mm			Mass[3] kg	Appro-priate nut no.[4]
d_1	thread[1] G	B_3	G_1	B_4[2]		d_a min	D_a max	r_{as} max	(approx.)	
280	Tr320 × 5	145	26	153	23060BK ;**AH 3060**	318	442	3	14.4	HNL64
	Tr310 × 5	184	24	202	24060BK30 ;**AH 24060H**	318	442	3	15.5	HN62
	Tr330 × 5	192	30	200	23160BK ;**AH 3160**	322	478	4	20.8	HN66
	Tr320 × 5	224	24	242	24160BK30 ;**AH 24160H**	322	478	4	19.5	HN64
	Tr330 × 5	170	26	178	22260B ;**AH 2260**	322	518	4	18.1	HN66
	Tr330 × 5	228	34	236	23260BK ;**AH 3260**	322	518	4	26	HN66
300	Tr345 × 5	149	27	157	23064BK ;**AH 3064**	338	462	3	16	HNL69
	Tr330 × 5	184	24	202	24064BK30 ;**AH 24064H**	338	462	3	16.6	HN66
	Tr350 × 5	209	31	217	23164BK ;**AH 3164**	342	518	4	24.5	HN70
	Tr340 × 5	242	24	260	24164BK30 ;**AH 24164H**	342	518	4	21.4	HN68
	Tr350 × 5	180	27	190	22264BK ;**AH 2264**	342	558	4	20.2	HN70
	Tr350 × 5	246	36	254	23264BK ;**AH 3264**	342	558	4	30.6	HN70
320	Tr365 × 5	162	28	171	23068BK ;**AH 3068**	362	498	4	19.5	HN73
	Tr360 × 5	206	26	225	24068BK30 ;**AH 24068H**	362	498	4	21.7	HNL72
	Tr370 × 5	225	33	234	23168BK ;**AH 3168**	362	558	4	29	HN74
	Tr360 × 5	269	26	288	24168BK30 ;**AH 24168H**	362	558	4	27.1	HN72
340	Tr385 × 5	167	30	176	23072BK ;**AH 3072**	382	518	4	21	HNL77
	Tr380 × 5	206	26	226	24072BK30 ;**AH 24072H**	382	518	4	22.7	HNL76
	Tr400 × 5	229	35	238	23172BK ;**AH 3172**	382	578	4	33	HN80
	Tr380 × 5	269	26	289	24172BK30 ;**AH 24172H**	382	578	4	29.6	HN76
360	Tr410 × 5	170	31	180	23076BK ;**AH 3076**	402	538	4	23.2	HNL82
	Tr400 × 5	208	28	228	24076BK30 ;**AH 24076H**	402	538	4	23.7	HNL80
	Tr420 × 5	232	36	242	23176BK ;**AH 3176**	402	598	4	35.7	HN84
	Tr400 × 5	271	28	291	24176BK30 ;**AH 24176H**	402	598	4	31.3	HN80
380	Tr430 × 5	183	33	193	23080BK ;**AH 3080**	422	578	4	27.3	HNL86
	Tr420 × 5	228	28	248	24080BK30 ;**AH 24080H**	422	578	4	27.1	HNL84
	Tr440 × 5	240	38	250	23180BK ;**AH 3180**	428	622	5	39.5	HN88
	Tr420 × 5	278	28	298	24180BK30 ;**AH 24180H**	428	622	5	34.4	HN84
400	Tr450 × 5	186	34	196	23084BK ;**AH 3084**	442	598	4	29	HNL90
	Tr440 × 5	230	30	252	24084BK30 ;**AH 24084H**	442	598	4	29	HNL88

1) Standard thread shapes and dimensions are as per **JIS B0207** (metric thread).
2) Indicates reference dimensions before attachment of withdrawal sleeve.
3) Indicates withdrawal sleeve mass.
4) Indicates number of nut to be used at time of disassembly. See pages **C-2 to C-10** for nut dimensions.
Note: 1. Please refer to page **B-246, B-249** for bearing dimensions, rated loads, and mass.
2. Withdrawal sleeve numbers appended with the suffix "**H**" signify high pressure oil (hydraulic) design. (See page **B-235**)

Withdrawal Sleeves

(For spherical roller bearings)

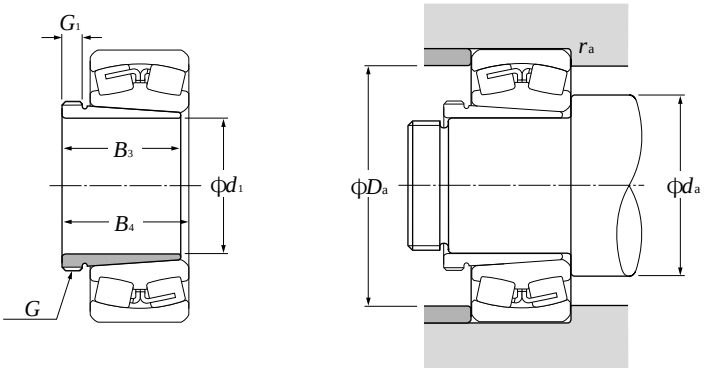

d_1 400～480mm

d_1	Boundary dimensions mm thread[1] G	B_3	G_1	B_4[2]	Bearing numbers	Abutment and fillet dimensions mm d_a min	D_a max	r_{as} max	Mass[3] kg (approx.)	Appro-priate nut no.[4]
400	Tr460 × 5	266	40	276	23184BK ; **AH 3184**	448	672	5	46.5	HN92
	Tr440 × 5	310	30	332	24184BK30 ; **AH 24184H**	448	672	5	40.3	HN88
420	Tr470 × 5	194	35	205	23088BK ; **AHX 3088**	468	622	5	32	HNL94
	Tr460 × 5	242	30	264	24088BK30 ; **AH 24088H**	468	622	5	31.9	HNL92
	Tr480 × 5	270	42	281	23188BK ; **AHX 3188**	468	692	5	49.8	HN96
440	Tr460 × 5	310	30	332	24188BK30 ; **AH 24188H**	468	692	5	42.3	HN92
	Tr490 × 5	202	37	213	23092BK ; **AHX 3092**	488	652	5	35.2	HNL98
	Tr480 × 5	250	32	273	24092BK30 ; **AH 24092H**	488	652	5	34.7	HNL96
	Tr510 × 6	285	43	296	23192BK ; **AHX 3192**	496	724	6	57.9	HN102
	Tr480 × 5	332	32	355	24192BK30 ; **AH 24192H**	496	724	6	47.6	HN96
460	Tr520 × 6	205	38	217	23096BK ; **AHX 3096**	508	672	5	39.2	HNL104
	Tr500 × 5	250	32	273	24096BK30 ; **AH 24096H**	508	672	5	36.6	HNL100
	Tr530 × 6	295	45	307	23196BK ; **AHX 3196**	516	754	6	63.1	HN106
	Tr500 × 5	340	32	363	24196BK30 ; **AH 24196H**	516	754	6	52.6	HN100
480	Tr540 × 6	209	40	221	230/500BK ; **AHX 30/500**	528	692	5	42.5	HNL108
	Tr530 × 6	253	35	276	240/500BK30 ; **AH 240/500H**	528	692	5	43.9	HNL106
	Tr550 × 6	313	47	325	231/500BK ; **AHX 31/500**	536	794	6	70.9	HN110
	Tr530 × 6	360	35	383	241/500BK30 ; **AH 241/500H**	536	794	6	59	HN106

1) Standard thread shapes and dimensions are as per **JIS B0207** (metric thread).
2) Indicates reference dimensions before attachment of withdrawal sleeve.
3) Indicates withdrawal sleeve mass.
4) Indicates number of nut to be used at time of disassembly. See pages **C-2 to C-10** for nut dimensions.

Note: 1. Please refer to page **B-248, B-251** for bearing dimensions, rated loads, and mass.
2. Withdrawal sleeve numbers appended with the suffix "**H**" signify high pressure oil (hydraulic) design. (See page **B-227**)

NTN
NTN
NTN

Single direction thrust ball bearings

Double direction angular contact thrust ball bearings

High speed / axial load duplex angular contact thrust ball bearings

Spherical roller thrust bearings

These bearings are designed primarily to support axial loads at contact angles between 30˚ and 90˚. Just as with radial bearings, these bearings differ according to the type of rolling element they use: there are thrust ball bearings that use balls and thrust roller bearings that use rollers.

The configuration and characteristics of each type of bearing are given.

With thrust bearings, it is necessary to supply an axial preload in order to prevent slipping movement between the bearing's rolling elements and raceways. For more detailed information on this point, please refer to the material concerning bearing preload on page A-62.

1. Single direction thrust ball bearings

As shown in **Diagram 1**, the steel balls of single direction thrust ball bearings are arranged between a pair of shaft housing washers (bearing shaft washer and housing shaft washer), and the normal contact angle is 90˚. Axial loads can be supported in only one direction, radial loads can not be accommodated, therefore these bearings are unsuitable for high speed operation.

Table 1 lists the standard cage types for single direction thrust ball bearings.

Table 1 Standard cage types for single direction thrust ball bearings

Bearing series	511	512	513	514
Molded resin cage	51100 ～51107	51200 ～51207	–	–
Pressed cage	51108 ～51152	51208 ～51224	51305 ～51320	51405 ～51415
Machined cage	51156 ～511/530	51226 ～51260	51322 ～51340	51416 ～51420

Note: Due to their material properties, molded resin cages can not be used in applications where temperatures exceed 120˚C.

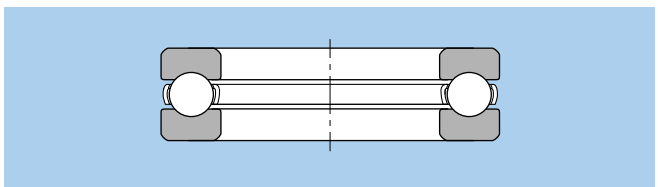

Diagram 1. Single direction thrust ball bearing (with pressed cage)

2. Angular contact thrust ball bearings

Angular contact thrust ball bearings are high precision bearings which are widely used to handle axial loads from machine tool main shafts. These bearings come in a number of varieties including double direction angular contact thrust ball bearings (series 5629 and 5620), and high speed / axial load duplex angular contact thrust ball bearings (HTA series).

These bearings have the same bore diameter and outer diameter as double row cylindrical roller bearings (series NN30, NN49, and NNU49) and can be arranged for use together. **Table 2** shows the construction and characteristics of these various bearings.

Table 2 Angular contact thrust ball bearing construction and characteristics

Bearing no.	Double direction angular contact thrust bearing	High speed / axial load duplex angular contact thrust ball bearing
Bearing series	Series 5629, 5620	HTA, DB series
Bearing construction	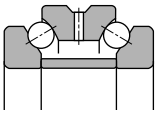	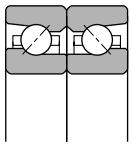
Initial contact angle	60°	40°, 30°
Standard cage type	Machined cage	Molded resin cage, Machined cage
Characteristics	● 5629 is used in combination with NN (NNU) 49 and 5620 with NN30. ● High axial direction rigidity; can support axial loads in either direction ● Unsuitable for vertical shafts ● Oil inlet and oil groove dimensions listed in dimension charts	● HTA9, DB can be arranged and used with NN (NNU) 49: HTA0, DB can be arranged and used with NN30 ● Bearing outer diameter dimension same as double direction angular contact thrust ball bearings minus tolerances (suffix code: L); can only support axial loads ● Axial rigidity is less than that of high-speed duplex angular contact ball bearings (for axial loads). ● Allowable axial load should be regulated to approx. 1/6 of the rated basic static load
Bearing accuracy	See **Table 6.9** on p. A-41	See **Table 3**
Standard preload	See **Table 5**	
Interchangeability	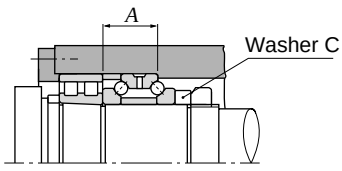 Double direction angular contact thrust ball bearing Series 5629 Series 5620 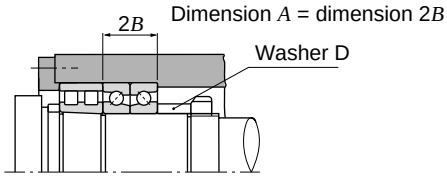 High speed / axial load duplex angular contact thrust ball bearing HTA9DB series HTA0DB series Because dimension A = dimension $2B$, it is necessary to change the washer dimension.	

For more details about these bearings, please refer to the **NTN** machine tool precision bearing catalog.

Table 3 Standard cages for duplex angular contact ball bearings for high-speed axial loads

Bearing series	HTA 9	HTA 0
Formed resin cage	–	HTA 010～HTA 032
Machined cage	HTA 920～HTA 964	HTA 005～HTA 009 HTA 034～HTA 064

Table 4 Tolerance of high speed / axial load duplex angular contact thrust ball bearings

Table 4.1 Inner rings

Units μm

Nominal bore dia. d mm over	up to/incl.	Dimensional tolerance of mean bore diameter within plane Δ_{dmp} Class 5 High	Class 5 Low	Class 4 ❶ High	Class 4 Low	Bore diameter variation V_{dp} Diameter series 9 Class 5 Max	Diameter series 9 Class 4 Max	Diameter series 0 Class 5 Max	Diameter series 0 Class 4 Max	Dimensional tolerance of mean inside diameter within planee V_{dmp} Class 5 Max	Class 4 Max	Side runout with bore S_d Class 5 Max	Class 4 Max	Axial runout S_{ia} Class 5 Max	Class 4 Max	Tolerance of combination width Δ_{Bs} Class 5 High	Class 5 Low	Class 4 High	Class 4 Low	Width variation V_{Bs} Class 5 Max	Class 4 Max
18	30	0	−6	0	−5	6	5	5	4	3	2.5	8	4	5	3	0	−240	0	−120	5	2.5
30	50	0	−8	0	−6	8	6	6	5	4	3	8	4	5	3	0	−240	0	−120	5	3
50	80	0	−9	0	−7	9	7	7	5	5	3.5	8	5	6	5	0	−300	0	−150	6	4
80	120	0	−10	0	−8	10	8	8	6	5	4	9	5	6	5	0	−400	0	−200	7	4
120	150	0	−13	0	−10	13	10	10	8	7	5	10	6	8	6	0	−500	0	−250	8	5
150	180	0	−13	0	−10	13	10	10	8	7	5	10	6	8	6	0	−500	0	−250	8	5
180	250	0	−15	0	−12	15	12	12	9	8	6	11	7	8	6	0	−600	0	−300	10	6
250	315	0	−18	0	−14	18	14	14	11	9	8	13	8	10	8	0	−700	0	−350	13	8
315	400	0	−23	0	−16	23	17	18	12	12	9	15	10	13	10	0	−800	0	−400	15	10

❶ The allowable deviation of single bore diameter deviation Δ_{ds} is identical to the allowable deviation of the single plane mean bore diameter deviation.

Table 4.2 Outer ring

Units μm

Nominal outside dia. D mm over	up to/incl.	Dimensional tolerance of mean bore diameter Δ_{Dmp} within plane and outer diameter tolerance Δ_{Ds} Class 5 High	Class 4 Low	Axial runout S_{ea} Class 5 Max	Class 4 Max	Width variation V_{cs} Class 5 Max	Class 4 Max
30	50	−25	−36	8	5	5	2.5
50	80	−30	−43	10	5	6	3
80	120	−36	−51	11	6	8	4
120	150	−43	−61	13	7	8	5
150	180	−43	−61	14	8	8	5
180	250	−50	−70	15	10	10	7
250	315	−56	−79	18	10	11	7
315	400	−62	−87	20	13	13	8
400	500	−68	−95	23	15	15	10

Note: 1. These standards are NTN standards.
2. Bearing which use these accuracies should be appended with the accuracies code L.
(Example: HTA 020 DB / GNP 4L)

Table 4 Standard preload

Units N {kgf}

Bore dia. no	5629		5620		HTA9DB		HTA0DB		HTA0ADB	
	Normal preload GN	Medium preload GM	Normal preload GN	Medium preload GM	Normal preload GN	Medium preload GM	Normal preload GN	Medium preload GM	Normal preload GN	Medium preload GM
05			294 {30}	685 {70}			390 {40}	685 {70}	147 {15}	294 {30}
06			490 {50}	785 {80}						
07							685 {70}	1,270 {130}	294 {30}	590 {60}
08										
09										
10			980 {100}	1,670 {170}						
11									490 {50}	885 {90}
12	——	——			——	——				
13										
14			1,470 {150}	2,450 {250}			980 {100}	1,570 {160}	590 {60}	1,470 {150}
15										
16								1,960 {200}		
17									885 {90}	1,960 {200}
18							1,470 {150}	2,450 {250}		
19										
20	1,470 {150}	2,450 {250}	1,960 {200}	3,250 {330}	980 {100}	1,670 {170}				
21									980 {100}	2,450 {250}
22							1,960 {200}	3,450 {350}		
24	1,960 {200}	2,940 {300}			1,270 {130}	2,450 {250}	2,940 {300}	5,400 {550}	1,470 {150}	3,450 {350}
26										
28										
30					1,960 {200}	3,450 {350}				
32							3,900 {400}	7,350 {750}	2,450 {250}	4,900 {500}
34										
36	2,450 {250}	3,900 {400}	2,450 {250}	3,900 {400}	3,450 {350}	5,900 {600}	4,900 {500}	9,300 {950}		
38									3,450 {350}	6,850 {700}
40					3,900 {400}	6,850 {700}				
44	2,940 {300}	4,400 {450}	2,940 {300}	4,400 {450}			6,850 {700}	12,700 {1,300}		
48									3,900 {400}	7,850 {800}
52					4,900 {500}	8,850 {900}	8,850 {900}	15,700 {1,600}		
56	3,900 {400}	5,900 {600}							5,900 {600}	11,800 {1,200}
60			3,900 {400}	5,900 {600}	5,900 {600}	11,800 {1,200}	10,800 {1,100}	17,700 {1,800}		
64	4,900 {500}	7,350 {750}								

3. Spherical roller thrust bearings

Just like spherical roller bearings, the center of the spherical surface for spherical roller thrust bearings is the point where the raceway surface of the housing raceway disc meets the center axis of the bearing. Since spherical roller thrust bearings incorporate barrel-shaped rollers as rolling elements, they also have self-aligning properties. (See **Diagram 2**)

Under normal load conditions, the allowable misalignment is 1˚ to 2˚, although this will vary depending upon the bearing's dimension series.

These bearings use machined copper alloy cages and a guide sleeve is attached to the inner ring to guide the cage. The axial load capacity of these bearings is high, and a certain amount of radial load can also be accommodated when the ring is in an axially loaded state. However, it is necessary to operate these bearings where the load condition meet $F_r/F_a \leqq 0.55$.

These bearings have some spots where lubricant cannot enter such as the gap between the cage and guide sleeve. It is necessary to use oil lubrication even in low speed operation.

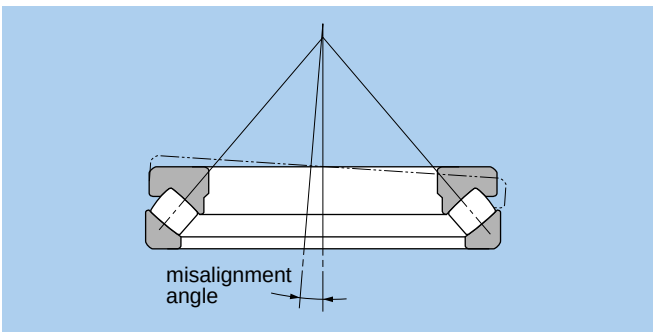

Diagram 2. Spherical roller thrust bearings

4. Cylindrical roller thrust bearings

Thrust bearings incorporating cylindrical rollers are available in single row, double row, triple row, and four row varieties. (See **Diagram 3**) NTN Engineering offers the 811, 812 and 893 series of standard series bearings that conform to dimension series 11, 12 and 93 prescribed in JIS, as well as other special dimensions.

Cylindrical roller thrust bearings are able to receive axial loads only, and have high axial rigidity which makes them well suited for heavy axial loads. Needle roller bearing information for series 811, 812, and 893 is also listed in the dimension tables.

Furthermore, bearings with dimensions not listed in the dimension tables are also manufactured. Contact NTN Engineering for more information.

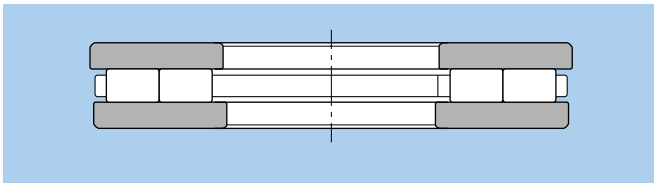

Diagram 3. Double row cylindrical roller thrust bearings

5. Tapered roller thrust bearings

Although not listed in the dimension tables, tapered roller bearings like those in **Diagram 4** are also manufactured. Contact **NTN** Engineering for more detailed information.

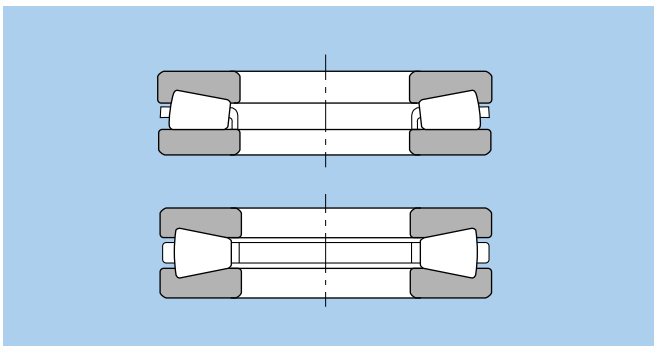

Diagram 4. Tapered roller thrust bearings

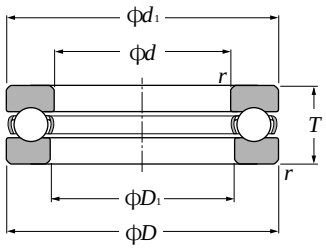

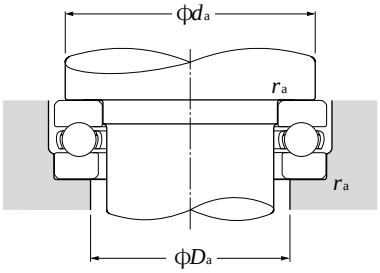

Equivalent bearing load
dynamic
$P_a = F_a$

static
$P_{oa} = F_a$

d 10～50mm

Boundary dimensions mm				Basic load ratings dynamic kN		static kN		Limiting speeds min^{-1}		Bearing numbers	Dimensions mm		Abutment and fillet dimensions mm			Mass kg
d	D	T	$r_{s\,min}$ [1]	C_a	C_{oa}	C_a	C_{oa}	grease	oil		$d_{1s\,max}$ [2]	$D_{1s\,min}$ [3]	d_a min	D_a max	r_{as} max	(approx.)
10	24	9	0.3	10.0	14.0	1 020	1 420	6 700	9 500	**51100**	24	11	18	16	0.3	0.021
	26	11	0.6	12.7	17.1	1 290	1 740	5 800	8 300	**51200**	26	12	20	16	0.6	0.03
12	26	9	0.3	10.3	15.4	1 050	1 570	6 400	9 200	**51101**	26	13	20	18	0.3	0.023
	28	11	0.6	13.2	19.0	1 340	1 940	5 600	8 000	**51201**	28	14	22	18	0.6	0.034
15	28	9	0.3	10.5	16.8	1 070	1 710	6 200	8 800	**51102**	28	16	23	20	0.3	0.024
	32	12	0.6	16.6	24.8	1 690	2 530	5 000	7 100	**51202**	32	17	25	22	0.6	0.046
17	30	9	0.3	10.8	18.2	1 100	1 850	6 000	8 500	**51103**	30	18	25	22	0.3	0.026
	35	12	0.6	17.2	27.3	1 750	2 780	4 800	6 800	**51203**	35	19	28	24	0.6	0.054
20	35	10	0.3	14.2	24.7	1 450	2 520	5 200	7 500	**51104**	35	21	29	26	0.3	0.04
	40	14	0.6	22.3	37.5	2 270	3 850	4 100	5 900	**51204**	40	22	32	28	0.6	0.081
25	42	11	0.6	19.6	37.0	1 990	3 800	4 600	6 500	**51105**	42	26	35	32	0.6	0.06
	47	15	0.6	27.8	50.5	2 830	5 150	3 700	5 300	**51205**	47	27	38	34	0.6	0.111
	52	18	1	35.5	61.5	3 650	6 250	3 200	4 600	**51305**	52	27	41	36	1	0.176
	60	24	1	55.5	89.5	5 650	9 100	2 600	3 700	**51405**	60	27	46	39	1	0.33
30	47	11	0.6	20.4	42.0	2 080	4 300	4 300	6 200	**51106**	47	32	40	37	0.6	0.069
	52	16	0.6	29.3	58.0	2 990	5 950	3 400	4 900	**51206**	52	32	43	39	0.6	0.139
	60	21	1	43.0	78.5	4 350	8 000	2 800	3 900	**51306**	60	32	48	42	1	0.269
	70	28	1	72.5	126	7 400	12 800	2 200	3 200	**51406**	70	32	54	46	1	0.516
35	52	12	0.6	20.4	44.5	2 080	4 550	3 900	5 600	**51107**	52	37	45	42	0.6	0.085
	62	18	1	39.0	78.0	4 000	7 950	2 900	4 200	**51207**	62	37	51	46	1	0.215
	68	24	1	55.5	105	5 650	10 700	2 400	3 500	**51307**	68	37	55	48	1	0.383
	80	32	1.1	87.0	155	8 850	15 800	1 900	2 800	**51407**	80	37	62	53	1	0.759
40	60	13	0.6	26.9	63.0	2 740	6 400	3 500	5 000	**51108**	60	42	52	48	0.6	0.125
	68	19	1	47.0	98.5	4 800	10 000	2 700	3 900	**51208**	68	42	57	51	1	0.276
	78	26	1	69.0	135	7 050	13 700	2 200	3 100	**51308**	78	42	63	55	1	0.548
	90	36	1.1	112	205	11 500	20 900	1 700	2 500	**51408**	90	42	70	60	1	1.08
45	65	14	0.6	27.9	69.0	2 840	7 050	3 200	4 600	**51109**	65	47	57	53	0.6	0.148
	73	20	1	48.0	105	4 850	10 700	2 600	3 700	**51209**	73	47	62	56	1	0.317
	85	28	1	80.0	163	8 150	16 700	2 000	2 900	**51309**	85	47	69	61	1	0.684
	100	39	1.1	130	242	13 200	24 700	1 600	2 200	**51409**	100	47	78	67	1	1.43
50	70	14	0.6	28.8	75.5	2 930	7 700	3 100	4 500	**51110**	70	52	62	58	0.6	0.161
	78	22	1	48.5	111	4 950	11 400	2 400	3 400	**51210**	78	52	67	61	1	0.378

1) Smallest allowable dimension for chamfer dimension r. 2) Maximum allowable dimension for shaft washer outer dimension d_1.
3) Smallest allowable dimension for housing washer inner dimension D_1.

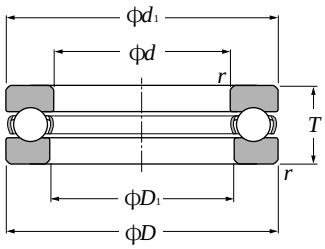

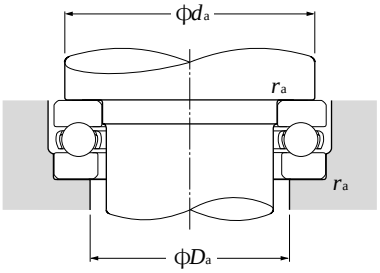

Equivalent bearing load
dynamic
$P_a = F_a$

static
$P_{oa} = F_a$

d 50～90mm

Boundary dimensions mm			Basic load ratings dynamic kN		static kN		Limiting speeds min^{-1}		Bearing numbers	Dimensions mm		Abutment and fillet dimensions mm			Mass kg
d	D	T	$r_{s\,min}$ [1]	C_a	C_{oa}	C_a	C_{oa}	grease	oil		$d_{1s\,max}$ [2]	$D_{1s\,min}$ [3]	d_a min	D_a max	r_{as} max	(approx.)
50	95	31	1.1	96.5	202	9 850	20 600	1 800	2 600	**51310**	95	52	77	68	1	0.951
	110	43	1.5	148	283	15 100	28 800	1 400	2 000	**51410A**	110	52	86	74	1.5	1.9
55	78	16	0.6	35.0	93.0	3 550	9 500	2 800	4 000	**51111**	78	57	69	64	0.6	0.226
	90	25	1	69.5	159	7 100	16 200	2 100	3 000	**51211**	90	57	76	69	1	0.608
	105	35	1.1	119	246	12 200	25 100	1 600	2 300	**51311**	105	57	85	75	1	1.29
	120	48	1.5	178	360	18 200	36 500	1 300	1 800	**51411**	120	57	94	81	1.5	2.52
60	85	17	1	41.5	113	4 200	11 500	2 600	3 700	**51112**	85	62	75	70	1	0.296
	95	26	1	73.5	179	7 500	18 200	2 000	2 800	**51212**	95	62	81	74	1	0.676
	110	35	1.1	123	267	12 600	27 200	1 600	2 300	**51312**	110	62	90	80	1	1.37
	130	51	1.5	214	435	21 800	44 500	1 200	1 700	**51412**	130	62	102	88	1.5	3.12
65	90	18	1	41.5	117	4 250	12 000	2 400	3 500	**51113**	90	67	80	75	1	0.338
	100	27	1	75.0	189	7 650	19 200	1 900	2 700	**51213**	100	67	86	79	1	0.767
	115	36	1.1	128	287	13 000	29 300	1 500	2 200	**51313**	115	67	95	85	1	1.51
	140	56	2	232	495	23 600	50 500	1 100	1 600	**51413**	140	68	110	95	2	3.96
70	95	18	1	43.0	127	4 400	12 900	2 400	3 400	**51114**	95	72	85	80	1	0.356
	105	27	1	76.0	199	7 750	20 200	1 800	2 600	**51214**	105	72	91	84	1	0.793
	125	40	1.1	148	340	15 100	34 500	1 400	2 000	**51314**	125	72	103	92	1	2.01
	150	60	2	250	555	25 500	56 500	1 000	1 500	**51414**	150	73	118	102	2	4.86
75	100	19	1	44.5	136	4 550	13 900	2 200	3 200	**51115**	100	77	90	85	1	0.399
	110	27	1	77.5	209	7 900	21 300	1 800	2 600	**51215**	110	77	96	89	1	0.874
	135	44	1.5	171	395	17 400	40 500	1 300	1 800	**51315**	135	77	111	99	1.5	2.61
	160	65	2	269	615	27 400	63 000	940	1 400	**51415**	160	78	125	110	2	5.97
80	105	19	1	44.5	141	4 550	14 400	2 200	3 100	**51116**	105	82	95	90	1	0.422
	115	28	1	78.5	218	8 000	22 300	1 700	2 400	**51216**	115	82	101	94	1	0.916
	140	44	1.5	176	425	18 000	43 000	1 200	1 800	**51316**	140	82	116	104	1.5	2.72
	170	68	2.1	270	620	27 500	63 500	890	1 300	**51416**	170	83	133	117	2	7.77
85	110	19	1	46.0	150	4 700	15 300	2 100	3 000	**51117**	110	87	100	95	1	0.444
	125	31	1	95.5	264	9 700	26 900	1 600	2 200	**51217**	125	88	109	101	1	1.25
	150	49	1.5	201	490	20 500	50 000	1 100	1 600	**51317**	150	88	124	111	1.5	3.52
	180	72	2.1	288	685	29 400	70 000	840	1 200	＊**51417**	177	88	141	124	2	9.17
90	120	22	1	59.5	190	6 100	19 400	1 900	2 700	**51118**	120	92	108	102	1	0.687
	135	35	1.1	117	325	11 900	33 000	1 400	2 000	**51218**	135	93	117	108	1	1.7
	155	50	1.5	198	490	20 200	50 000	1 100	1 600	**51318**	155	93	129	116	1.5	3.74
	190	77	2.1	305	750	31 500	76 500	790	1 100	＊**51418**	187	93	149	131	2	11

1）Smallest allowable dimension for chamfer dimension r. 2）Maximum allowable dimension for shaft washer outer dimension d_1. 3）Smallest allowable dimension for housing washer inner dimension D_1. Note: Bearing numbers marked "＊" signify bearings where the bearing shaft washer outer diameter is smaller than the housing shaft washer outer diameter. Therefore when using these bearings, it is possible to use the housing bore as is, without providing a ground undercut on the outer diameter section of the bearing shaft washer as shown in the drawing.

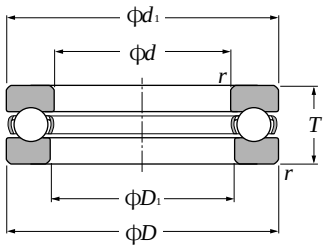

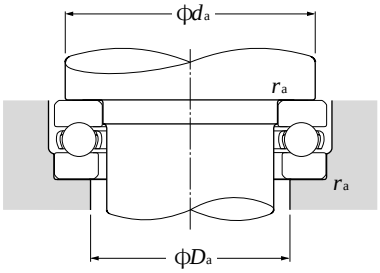

Equivalent bearing load
dynamic
$P_a = F_a$

static
$P_{oa} = F_a$

d 100～200mm

Boundary dimensions mm				Basic load ratings dynamic kN	static kN	dynamic kgf	static kgf	Limiting speeds min-1		Bearing numbers	Dimensions mm		Abutment and fillet dimensions mm			Mass kg
d	D	T	$r_{s\,min}$ 1)	C_a	C_{oa}	C_a	C_{oa}	grease	oil		$d_{1s\,max}$ 2)	$D_{1s\,min}$ 3)	d_a min	D_a max	r_{as} max	(approx.)
100	135	25	1	85.0	268	8 700	27 300	1 700	2 400	**51120**	135	102	121	114	1	0.987
	150	38	1.1	147	410	14 900	42 000	1 300	1 800	**51220**	150	103	130	120	1	2.29
	170	55	1.5	237	595	24 100	60 500	990	1 400	**51320**	170	103	142	128	1.5	4.88
	210	85	3	370	970	37 500	99 000	710	1 000	∗ **51420**	205	103	165	145	2.5	14.7
110	145	25	1	87.0	288	8 900	29 400	1 600	2 300	**51122**	145	112	131	124	1	1.07
	160	38	1.1	153	450	15 600	46 000	1 200	1 800	**51222**	160	113	140	130	1	2.46
	190	63	2	267	705	27 300	72 000	870	1 200	∗ **51322**	187	113	158	142	2	7.67
120	155	25	1	89.0	310	9 100	31 500	1 500	2 200	**51124**	155	122	141	134	1	1.11
	170	39	1.1	154	470	15 700	48 000	1 200	1 700	**51224**	170	123	150	140	1	2.71
	210	70	2.1	296	805	30 000	82 500	780	1 100	∗ **51324**	205	123	173	157	2	10.8
130	170	30	1	104	350	10 600	36 000	1 300	1 900	**51126**	170	132	154	146	1	1.73
	190	45	1.5	191	565	19 400	57 500	1 000	1 500	∗ **51226**	187	133	166	154	1.5	4.22
	225	75	2.1	330	960	33 500	97 500	720	1 000	∗ **51326**	220	134	186	169	2	12.7
140	180	31	1	107	375	10 900	38 500	1 300	1 800	∗ **51128**	178	142	164	156	1	1.9
	200	46	1.5	193	595	19 700	60 500	980	1 400	∗ **51228**	197	143	176	164	1.5	4.77
	240	80	2.1	350	1 050	35 500	107 000	670	960	∗ **51328**	235	144	199	181	2	15.3
150	190	31	1	109	400	11 100	41 000	1 200	1 800	∗ **51130**	188	152	174	166	1	2
	215	50	1.5	220	685	22 400	70 000	900	1 300	∗ **51230**	212	153	189	176	1.5	5.87
	250	80	2.1	360	1 130	37 000	115 000	660	940	∗ **51330**	245	154	209	191	2	16.1
160	200	31	1	112	425	11 400	43 500	1 200	1 700	∗ **51132**	198	162	184	176	1	2.1
	225	51	1.5	223	720	22 800	73 000	870	1 200	∗ **51232**	222	163	199	186	1.5	6.32
	270	87	3	450	1 470	45 500	150 000	600	860	∗ **51332**	265	164	225	205	2.5	20.7
170	215	34	1.1	134	510	13 700	52 000	1 100	1 600	∗ **51134**	213	172	197	188	1	2.77
	240	55	1.5	261	835	26 600	85 000	810	1 200	∗ **51234**	237	173	212	198	1.5	7.81
	280	87	3	465	1 570	47 000	160 000	590	840	∗ **51334**	275	174	235	215	2.5	21.6
180	225	34	1.1	135	525	13 700	54 000	1 100	1 500	∗ **51136**	222	183	207	198	1	2.92
	250	56	1.5	266	875	27 100	89 000	780	1 100	∗ **51236**	247	183	222	208	1.5	8.34
	300	95	3	490	1 700	50 000	174 000	540	780	∗ **51336**	295	184	251	229	2.5	27.5
190	240	37	1.1	170	655	17 400	67 000	980	1 400	∗ **51138**	237	193	220	210	1	3.75
	270	62	2	310	1 060	31 500	108 000	710	1 000	∗ **51238**	267	194	238	222	2	11.3
	320	105	4	545	1 950	55 500	199 000	500	710	∗ **51338**	315	195	266	244	3	35
200	250	37	1.1	172	675	17 500	69 000	960	1 400	∗ **51140**	247	203	230	220	1	3.92

1）Smallest allowable dimension for chamfer dimension r. 2）Maximum allowable dimension for shaft washer outer dimension d_1. 3）Smallest allowable dimension for housing washer inner dimension D_1. Note: Bearing numbers marked "∗" signify bearings where the bearing shaft washer outer diameter is smaller than the housing shaft washer outer diameter. Therefore when using these bearings, it is possible to use the housing bore as is, without providing a ground undercut on the outer diameter section of the bearing shaft washer as shown in the drawing.

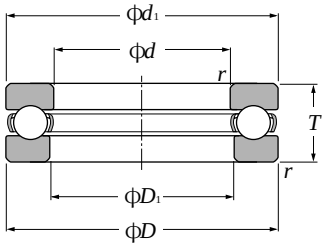

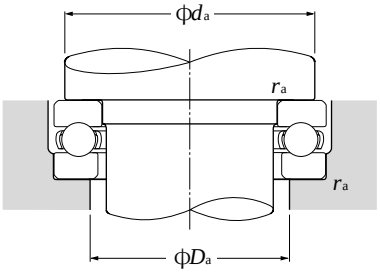

Equivalent bearing load
dynamic
$P_a = F_a$

static
$P_{oa} = F_a$

d 200～530mm

Boundary dimensions mm				Basic load ratings dynamic kN		static kN		Limiting speeds min^{-1}		Bearing numbers	Dimensions mm		Abutment and fillet dimensions mm			Mass kg
d	D	T	$r_{s\,min}$ 1)	C_a	C_{oa}	C_a	C_{oa}	grease	oil		$d_{1s\,max}$ 2)	$D_{1s\,min}$ 3)	d_a min	D_a max	r_{as} max	(approx.)
200	280	62	2	315	1 110	32 000	113 000	700	990	∗ **51240**	277	204	248	232	2	11.8
	340	110	4	595	2 220	61 000	227 000	470	670	∗ **51340**	335	205	282	258	3	41.8
220	270	37	1.1	177	740	18 100	75 500	920	1 300	∗ **51144**	267	223	250	240	1	4.27
	300	63	2	325	1 210	33 000	123 000	660	950	∗ **51244**	297	224	268	252	2	13
240	300	45	1.5	228	935	23 200	95 000	780	1 100	∗ **51148**	297	243	276	264	1.5	6.87
	340	78	2.1	415	1 650	42 500	168 000	550	790	∗ **51248**	335	244	299	281	2	22.4
260	320	45	1.5	232	990	23 600	101 000	750	1 100	∗ **51152**	317	263	296	284	1.5	7.38
	360	79	2.1	440	1 810	45 000	184 000	530	760	∗ **51252**	355	264	319	301	2	24.2
280	350	53	1.5	305	1 270	31 000	130 000	650	940	∗ **51156**	347	283	322	308	1.5	11.8
	380	80	2.1	460	1 970	47 000	201 000	510	730	∗ **51256**	375	284	339	321	2	26.1
300	380	62	2	355	1 560	36 000	159 000	580	820	∗ **51160**	376	304	348	332	2	17.2
	420	95	3	590	2 680	60 000	273 000	440	630	∗ **51260**	415	304	371	349	2.5	40.6
320	400	63	2	365	1 660	37 000	169 000	550	790	∗ **51164**	396	324	368	352	2	18.4
340	420	64	2	375	1 760	38 000	179 000	530	760	∗ **51168**	416	344	388	372	2	19.7
360	440	65	2	380	1 860	39 000	190 000	510	730	∗ **51172**	436	364	408	392	2	21.1
380	460	65	2	380	1 910	39 000	195 000	500	710	∗ **51176**	456	384	428	412	2	22.3
400	480	65	2	390	2 010	40 000	205 000	480	690	∗ **51180**	476	404	448	432	2	23.3
420	500	65	2	395	2 110	40 500	215 000	470	670	∗ **51184**	495	424	468	452	2	24.4
440	540	80	2.1	515	2 850	52 500	291 000	400	580	∗ **51188**	535	444	499	481	2	40
460	560	80	2.1	525	3 000	53 500	305 000	390	560	∗ **51192**	555	464	519	501	2	41.6
480	580	80	2.1	525	3 100	54 000	315 000	380	550	∗ **51196**	575	484	539	521	2	43.3
500	600	80	2.1	575	3 400	58 500	345 000	370	540	**511/500**	595	504	559	541	2	45
530	640	85	3	645	4 000	66 000	405 000	350	500	**511/530**	635	534	595	575	2.5	55.8

1) Smallest allowable dimension for chamfer dimension r. 2) Maximum allowable dimension for shaft washer outer dimension d_1. 3) Smallest allowable dimension for housing washer inner dimension D_1. Note: Bearing numbers marked "∗" signify bearings where the bearing shaft washer outer diameter is smaller than the housing shaft washer outer diameter. Therefore when using these bearings, it is possible to use the housing bore as is, without providing a ground undercut on the outer diameter section of the bearing shaft washer as shown in the drawing.

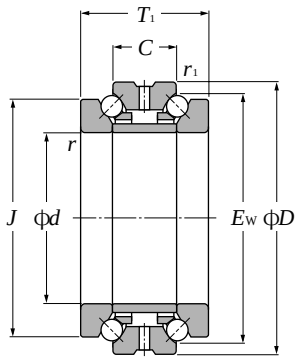

d 25～120mm

d small dia. type	d large dia. type	Boundary dimensions mm D	T1	C	rs min 1)	r1s min 1)	Basic load ratings dynamic kN Ca	static kN Coa	dynamic kgf Ca	static kgf Coa	Limiting speeds min-1 grease	oil	Bearing numbers small dia. type	large dia. type
25	**27**	47	28	14	0.6	0.3	13.2	28.3	1 350	2 890	7 600	10 000	**562005**	**562005M**
30	**32**	55	32	16	1	0.6	14.0	32.5	1 420	3 350	6 600	8 800	**562006**	**562006M**
35	**37**	62	34	17	1	0.6	19.7	48.5	2 010	4 950	6 000	8 100	**562007**	**562007M**
40	**42**	68	36	18	1	0.6	23.8	58.5	2 430	5 950	5 600	7 500	**562008**	**562008M**
45	**47**	75	38	19	1	0.6	26.0	69.0	2 650	7 000	5 200	6 900	**562009**	**562009M**
50	**52**	80	38	19	1	0.6	26.8	74.0	2 730	7 550	5 000	6 700	**562010**	**562010M**
55	**57**	90	44	22	1.1	0.6	37.0	99.0	3 800	10 100	4 400	5 900	**562011**	**562011M**
60	**62**	95	44	22	1.1	0.6	37.5	103	3 850	10 500	4 300	5 700	**562012**	**562012M**
65	**67**	100	44	22	1.1	0.6	39.0	111	3 950	11 300	4 200	5 600	**562013**	**562013M**
70	**73**	110	48	24	1.1	0.6	47.5	140	4 850	14 300	3 800	5 100	**562014**	**562014M**
75	**78**	115	48	24	1.1	0.6	49.0	150	5 000	15 300	3 700	4 900	**562015**	**562015M**
80	**83**	125	54	27	1.1	0.6	57.5	178	5 850	18 200	3 300	4 500	**562016**	**562016M**
85	**88**	130	54	27	1.1	0.6	58.0	184	5 950	18 800	3 300	4 400	**562017**	**562017M**
90	**93**	140	60	30	1.5	1	67.5	216	6 850	22 000	3 000	4 000	**562018**	**562018M**
95	**98**	145	60	30	1.5	1	68.0	223	6 950	22 700	2 900	3 900	**562019**	**562019M**
100	**104**	140	48	24	1.1	0.6	52.0	179	5 300	18 200	2 800	3 700	**562920**	**562920M**
	103	150	60	30	1.5	1	68.5	229	7 000	23 400	2 900	3 800	**562020**	**562020M**
105	**109**	145	48	24	1.1	0.6	53.5	188	5 450	19 200	2 700	3 600	**562921**	**562921M**
	109	160	66	33	2	1	78.5	266	8 000	27 100	2 600	3 500	**562021**	**562021M**
110	**114**	150	48	24	1.1	0.6	54.0	193	5 500	19 700	2 700	3 600	**562922**	**562922M**
	114	170	72	36	2	1	96.0	315	9 750	32 500	2 400	3 300	**562022**	**562022M**
120	**124**	165	54	27	1.1	0.6	65.0	242	6 600	24 700	2 400	3 200	**562924**	**562924M**
	124	180	72	36	2	1	98.0	335	10 000	34 500	2 400	3 200	**562024**	**562024M**

1）Minimum allowable dimension for chamfer dimension r or r_1.　2）Ball's maximum circumscribed circle diameter dimension

Note: 1. For small diameter type, the cylindrical bore or tapered bore is provided on the small diameter of double row cylindrical roller bearing series **NNU49**, **NN49**, and **NN30**; for large diameter type (marked with "**M**"), the tapered bore is provided on the large diameter side.

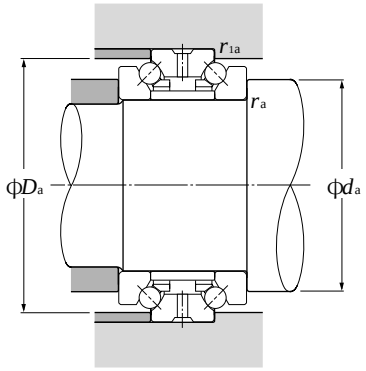

Equivalent bearing load
dynamic
$P_a = F_a$

static
$P_{oa} = F_a$

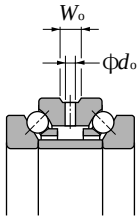

Dimensions mm		Abutment and fillet dimensions mm				Mass (approx.) kg	
J	E_w[2]	d_a min	D_a max	r_{as} max	r_{1as} max	small dia. type	large dia. type
40	41.3	33	44	0.6	0.3	0.197	0.177
47	48.5	40	50.5	1	0.6	0.301	0.28
53	55	45.5	57.5	1	0.6	0.394	0.35
58.5	61	50	63.5	1	0.6	0.482	0.44
65	67.5	56.5	70.5	1	0.6	0.605	0.54
70	72.5	61.5	75.5	1	0.6	0.638	0.59
78	81	67.5	84	1	0.6	0.988	0.9
83	86.1	72.5	89	1	0.6	1.06	0.96
88	91	77.5	94	1	0.6	1.08	1
97	100	85	104	1	0.6	1.53	1.4
102	105	90	109	1	0.6	1.61	1.5
110	113	96.5	119	1	0.6	2.2	2
115	118	102	124	1	0.6	2.31	2.1
123	127	109	133.5	1.5	1	3.05	2.7
128	132	114	138.5	1.5	1	3.18	2.9
126	129	114	134.5	1	0.6	2.04	1.8
133	137	119	143.5	1.5	1	3.32	3
131	134	119	139.5	1	0.6	2.12	1.87
142	146	127	152	2	1	4.19	3.7
136	139	124	144.5	1	0.6	2.21	1.95
150	155	133	162	2	1	5.35	4.9
150	154.5	138	159.5	1	0.6	3.06	2.75
160	165	143	172	2	1	5.73	5.2

Oil inlet, oil groove dimensions Units mm

Nominal outer diameter D over up to/incl.		Oil groove width W_o Bearing series		Oil inlet d_o Bearing series	
		5629	5620	5629	5620
—	50	—	4.5	—	2
50	80	—	6	—	3
80	150	8	8	4	4

Note: 2. The following bearing series can be assembled and used together: **5629 (M)** and **NNU49 (K)** and **NN49 (K)**; **5620 (M)** and **NN30 (K)**.
3. These are high precision bearings manufactured at NTN standard Class 5 or higher.

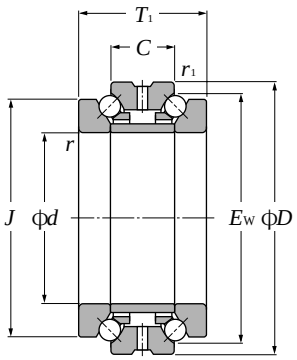

d 130～320mm

Boundary dimensions mm							Basic load ratings dynamic kN		Basic load ratings static kN		Basic load ratings dynamic kgf		Basic load ratings static kgf		Limiting speeds min-1		Bearing numbers	
d small dia. type	d large dia. type	D	T1	C	rs min 1)	r1s min 1)	Ca	Coa	Ca	Coa	Ca	Coa	Ca	Coa	grease	oil	small dia. type	large dia. type
130	134	180	60	30	1.5	1	75.0	284	7 650	28 900	2 200	2 900					562926	562926M
	135	200	84	42	2	1	139	460	14 200	47 000	2 100	2 800					562026	562026M
140	144	190	60	30	1.5	1	76.0	297	7 750	30 500	2 100	2 800					562928	562928M
	145	210	84	42	2	1	144	495	14 600	50 500	2 000	2 700					562028	562028M
150	155	210	72	36	2	1	107	410	10 900	41 500	1 800	2 400					562930	562930M
	155	225	90	45	2.1	1.1	147	525	15 000	53 500	1 900	2 500					562030	562030M
160	165	220	72	36	2	1	109	430	11 100	44 000	1 800	2 300					562932	562932M
	165	240	96	48	2.1	1.1	172	620	17 600	63 000	1 700	2 300					562032	562032M
170	175	230	72	36	2	1	111	450	11 300	46 000	1 700	2 300					562934	562934M
	176	260	108	54	2.1	1.1	202	735	20 600	75 000	1 600	2 100					562034	562034M
180	186	250	84	42	2	1	156	605	15 900	62 000	1 500	2 000					562936	562936M
	187	280	120	60	2.1	1.1	234	865	23 900	88 000	1 400	1 900					562036	562036M
190	196	260	84	42	2	1	157	625	16 000	63 500	1 500	2 000					562938	562938M
	197	290	120	60	2.1	1.1	236	890	24 100	91 000	1 400	1 900					562038	562038M
200	207	280	96	48	2.1	1.1	185	735	18 800	75 000	1 300	1 800					562940	562940M
	207	310	132	66	2.1	1.1	271	1 030	27 700	105 000	1 300	1 700					562040	562040M
220	227	300	96	48	2.1	1.1	190	795	19 400	81 000	1 300	1 700					562944	562944M
	228	340	144	72	3	1.1	335	1 270	34 000	129 000	1 200	1 500					562044	562044M
240	247	320	96	48	2.1	1.1	196	850	20 000	87 000	1 200	1 600					562948	562948M
	248	360	144	72	3	1.1	340	1 350	35 000	137 000	1 100	1 500					562048	562048M
260	269	360	120	60	2.1	1.1	261	1 130	26 600	116 000	1 000	1 400					562952	562952M
	269	400	164	82	4	1.5	405	1 710	41 500	174 000	980	1 300					562052	562052M
280	289	380	120	60	2.1	1.1	265	1 190	27 000	121 000	980	1 300					562956	562956M
	289	420	164	82	4	1.5	415	1 810	42 500	185 000	950	1 300					562056	562056M
300	310	420	144	72	3	1.1	335	1 510	34 500	154 000	840	1 100					562960	562960M
	310	460	190	95	4	1.5	475	2 170	48 500	221 000	830	1 100					562060	562060M
320	330	440	144	72	3	1.1	340	1 580	35 000	161 000	820	1 100					562964	562964M
	330	480	190	95	4	1.5	480	2 230	49 000	228 000	810	1 100					562064	562064M

1）Minimum allowable dimension for chamfer dimension r or r_1.　2）Ball's maximum circumscribed circle diameter dimension

Note: 1. For small diameter type, the cylindrical bore or tapered bore is provided on the small diameter of double row cylindrical roller bearing series **NNU49**, **NN49**, and **NN30**; for large diameter type (marked with "**M**"), the tapered bore is provided on the large diameter side.

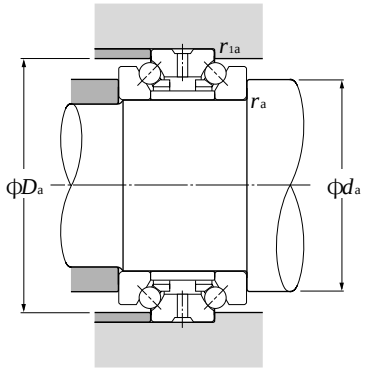

Equivalent bearing load
dynamic
$P_a = F_a$

static
$P_{oa} = F_a$

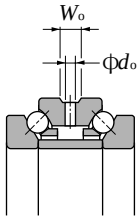

Dimensions		Abutment and fillet dimensions				Mass (approx.)	
mm		mm				kg	
J	E_w[2)]	d_a min	D_a max	r_{as} max	r_{1as} max	small dia. type	large dia. type
163	168	150	173.5	1.5	1	4.11	3.7
177	182	155	192	2	1	8.58	7.6
173	178	160	183.5	1.5	1	4.38	3.94
187	192	165	202	2	1	9.1	8.1
190	196.5	174	202	2	1	6.88	6.2
200	206	178	215	2	1	11.2	10
200	206.5	184	212	2	1	7.26	6.53
212	219	189	230	2	1	13.6	11.9
210	216.5	194	222	2	1	7.64	6.88
230	236	203	250	2	1	18.5	16.5
227	234	207	242	2	1	11.2	10
248	255	219	270	2	1	24.7	21.8
237	244	217	252	2	1	11.7	10.5
258	265	229	280	2	1	25.5	23
252	261	231	270	2	1	16.3	14.7
274	282	243	300	2	1	32.7	29.7
272	281	251	290	2	1	17.7	16
304	310	267	330	2.5	1	42.8	38.5
292	301	271	310	2	1	19	17
322	330	287	350	2.5	1	45.8	41.2
328	336	299	350	2	1	32.9	29.6
354	364	315	388	3	1.5	67	60.3
348	356	319	370	2	1	35	31.5
374	384	335	408	3	1.5	71.1	64
384	391	349	410	2.5	1	55	49.5
406	418	364	448	3	1.5	102	91.8
404	411	369	430	2.5	1	58.1	52.3
426	438	384	468	3	1.5	108	97.2

Oil inlet, oil groove dimensions

Units mm

Nominal outer diameter D		Oil groove width W_o		Oil inlet d_o	
		Bearing series		Bearing series	
over up to/incl.		5629	5620	5629	5620
80	150	8	8	4	4
150	200	8	12	4	6
200	210	12	12	6	6
210	260	12	14	6	6
260	320	14	16	6	8
320	400	16	23	8	12
400	480	22	22	12	12

Note: 2. The following bearing series can be assembled and used together: **5629 (M)** and **NNU49 (K)** and **NN49 (K)**; **5620 (M)** and **NN30 (K)**.
3. These are high precision bearings manufactured at NTN standard Class 5 or higher.

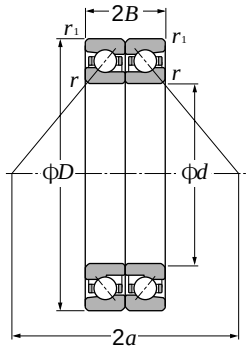

d 25～120mm

Boundary dimensions mm					Basic load ratings dynamic kN		dynamic kgf	static	Limiting speeds min-1		Bearing numbers
d	D	2B	$r_{s\,min}$ 1)	$r_{1s\,min}$ 1)	C_a	C_{oa}	C_a	C_{oa}	grease	oil	
25	47	21	0.6	0.3	16.2	22.1	1 650	2 260	16 000	21 000	HTA005DB
30	55	24	1	0.6	17.5	26.7	1 780	2 720	14 000	18 000	HTA006DB
35	62	25.5	1	0.6	25.2	38.0	2 570	3 900	12 000	16 000	HTA007DB
40	68	27	1	0.6	27.2	45.0	2 780	4 550	11 000	14 000	HTA008DB
45	75	28.5	1	0.6	27.9	48.5	2 840	4 950	9 700	13 000	HTA009DB
50	80	28.5	1	0.6	29.6	55.5	3 000	5 650	8 800	12 000	HTA010DB
55	90	33	1.1	0.6	32.0	64.0	3 250	6 500	8 000	11 000	HTA011DB
60	95	33	1.1	0.6	33.5	69.5	3 400	7 100	7 400	9 800	HTA012DB
65	100	33	1.1	0.6	34.0	72.0	3 450	7 350	6 900	9 200	HTA013DB
70	110	36	1.1	0.6	41.5	91.0	4 250	9 300	6 400	8 500	HTA014DB
75	115	36	1.1	0.6	44.0	101	4 500	10 300	5 900	7 900	HTA015DB
80	125	40.5	1.1	0.6	50.5	117	5 150	11 900	5 600	7 400	HTA016DB
85	130	40.5	1.1	0.6	51.0	120	5 200	12 300	5 200	7 000	HTA017DB
90	140	45	1.5	1	59.5	141	6 050	14 400	5 000	6 600	HTA018DB
95	145	45	1.5	1	60.0	146	6 100	14 900	4 700	6 300	HTA019DB
100	140	36	1.1	0.6	47.0	121	4 800	12 300	4 800	6 300	HTA920DB
	150	45	1.5	1	62.0	156	6 350	15 900	4 500	5 900	HTA020DB
105	145	36	1.1	0.6	48.5	128	4 950	13 000	4 500	6 000	HTA921DB
	160	49.5	2	1	71.0	181	7 250	18 400	4 200	5 600	HTA021DB
110	150	36	1.1	0.6	49.0	131	5 000	13 400	4 300	5 800	HTA922DB
	170	54	2	1	88.5	222	9 000	22 700	4 000	5 400	HTA022DB
120	165	40.5	1.1	0.6	57.0	156	5 800	15 900	4 000	5 300	HTA924DB
	180	54	2	1	89.0	228	9 050	23 300	3 700	4 900	HTA024DB

1) Minimum allowable dimension for chamfer dimension r or r_1.

Note: 1. This bearing can be used in place of high speed double direction angular contact thrust ball bearings. 2. These are high precision bearings manufactured at NTN standard Class 5 or higher.

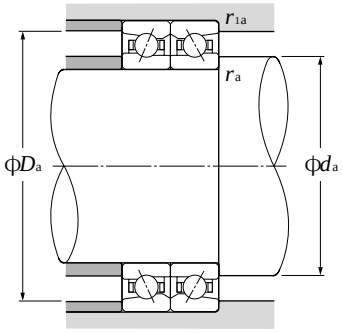

Abutment and fillet dimensions				Load center	Mass
mm				mm	kg
d_a min	D_a max	r_{as} max	r_{1as} max	$2a$	(approx.)
31	43.5	0.6	0.3	40.5	0.138
37.5	49	1	0.5	47.5	0.22
42.5	56	1	0.5	53.5	0.274
47.5	62	1	0.5	59	0.342
52.5	69	1	0.5	64.5	0.438
57.5	74	1	0.5	69	0.476
65	84	1	0.6	77.5	0.754
70	89	1	0.6	81.5	0.808
75	94	1	0.6	85.5	0.858
80	104	1	0.6	93.5	1.19
85	109	1	0.6	97.5	1.26
90	119	1	0.6	106	1.73
95	124	1	0.6	110	1.82
102	132.5	1.5	0.8	119	2.4
107	137.5	1.5	0.8	123	2.52
110	134	1	0.6	119	1.6
112	142.5	1.5	0.8	127	2.62
115	139	1	0.6	123	1.66
119	152.5	2	1	136	3.38
120	144	1	0.6	127	1.72
124	162.5	2	1	144	4.22
130	159	1	0.6	140	2.4
134	172.5	2	1	153	4.5

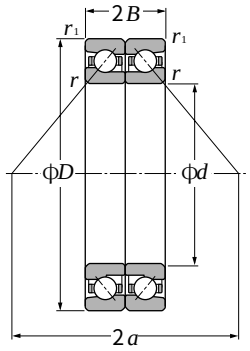

d 130～320mm

Boundary dimensions mm					Basic load ratings dynamic kN		Basic load ratings static kgf		Limiting speeds min-1		Bearing numbers
d	D	2B	$r_{s\,min}$ 1)	$r_{1s\,min}$ 1)	C_a	C_{oa}	C_a	C_{oa}	grease	oil	
130	180	45	1.5	1	68.0	193	6 950	19 600	3 600	4 800	HTA926DB
	200	63	2	1	128	325	13 000	33 000	3 400	4 500	HTA026DB
140	190	45	1.5	1	68.0	197	6 950	20 100	3 300	4 500	HTA928DB
	210	63	2	1	132	345	13 500	35 500	3 100	4 200	HTA028DB
150	210	54	2	1	95.5	270	9 750	27 600	3 100	4 200	HTA930DB
	225	67.5	2.1	1.1	136	370	13 800	37 500	2 900	3 900	HTA030DB
160	220	54	2	1	97.5	284	9 950	29 000	2 900	3 900	HTA932DB
	240	72	2.1	1.1	159	435	16 200	44 000	2 700	3 600	HTA032DB
170	230	54	2	1	99.5	298	10 100	30 500	2 700	3 600	HTA934DB
	260	81	2.1	1.1	182	500	18 600	51 000	2 500	3 400	HTA034DB
180	250	63	2	1	150	445	15 300	45 500	2 600	3 400	HTA936DB
	280	90	2.1	1.1	211	585	21 500	60 000	2 400	3 200	HTA036DB
190	260	63	2	1	153	470	15 600	48 000	2 400	3 200	HTA938DB
	290	90	2.1	1.1	214	605	21 800	61 500	2 200	3 000	HTA038DB
200	280	72	2.1	1.1	180	555	18 400	56 500	2 300	3 000	HTA940DB
	310	99	2.1	1.1	240	680	24 400	69 000	2 100	2 800	HTA040DB
220	300	72	2.1	1.1	185	595	18 900	60 500	2 100	2 700	HTA944DB
	340	108	3	1.1	300	860	30 500	87 500	1 900	2 600	HTA044DB
240	320	72	2.1	1.1	190	635	19 400	64 500	1 900	2 500	HTA948DB
	360	108	3	1.1	310	915	31 500	93 000	1 700	2 300	HTA048DB
260	360	90	2.1	1.1	250	830	25 400	84 500	1 700	2 300	HTA952DB
	400	123	4	1.5	365	1 160	37 500	118 000	1 600	2 100	HTA052DB
280	380	90	2.1	1.1	257	885	26 200	90 500	1 600	2 100	HTA956DB
	420	123	4	1.5	375	1 230	38 500	125 000	1 500	2 000	HTA056DB
300	420	108	3	1.1	325	1 130	33 500	115 000	1 400	1 900	HTA960DB
	460	142.5	4	1.5	430	1 470	44 000	150 000	1 400	1 800	HTA060DB
320	440	108	3	1.1	330	1 180	34 000	120 000	1 300	1 800	HTA964DB
	480	142.5	4	1.5	435	1 520	44 000	155 000	1 300	1 700	HTA064DB

1) Minimum allowable dimension for chamfer dimension r or r_1.

Note: 1. This bearing can be used in place of high speed double direction angular contact thrust ball bearings. 2. These are high precision bearings manufactured at NTN standard Class 5 or higher.

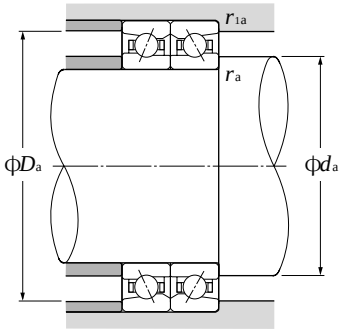

Abutment and fillet dimensions				Load center	Mass
mm				mm	kg
d_a min	D_a max	r_{as} max	r_{1as} max	$2a$	(approx.)
142	172.5	1.5	0.8	153	3.26
144	192.5	2	1	170	6.66
152	182.5	1.5	1	161	3.46
154	202.5	2	1	178	7.08
164	202.5	2	1	178	5.4
167	215	2	1	191	8.82
174	212.5	2	1	186	5.7
177	230	2	1	204	10.6
184	222.5	2	1	195	6
187	250	2	1	221	14.5
194	242.5	2	1	212	9.38
197	270	2	1	238	20.6
204	252.5	2	1	220	9.82
207	280	2	1	246	21.4
217	270	2	1	237	13.7
217	300	2	1	263	27.4
237	290	2	1	254	14.8
240	330	2.5	1	289	35.8
257	310	2	1	271	16
260	350	2.5	1	306	38.2
277	350	2	1	305	27.8
283	388	3	1.5	338	56.2
297	370	2	1	322	28
303	408	3	1.5	355	59.6
320	410	2.5	1	356	46.6
323	448	3	1.5	390	85.6
340	430	2.5	1	373	49
343	468	3	1.5	407	90

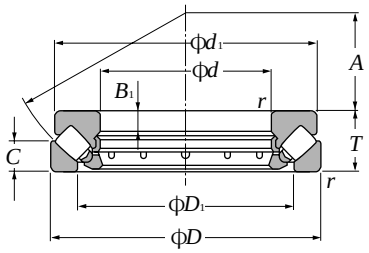

d 60～160mm

Boundary dimensions mm				Basic load ratings dynamic kN		static kN		Limiting speeds min-1	Bearing numbers	Dimensions mm				
d	D	T	$r_{s\,min}$ 1)	C_a	C_{oa}	C_a	C_{oa}	oil		D_1	d_1	B_1	C	A
60	130	42	1.5	283	805	28 900	82 000	2 600	**29412**	89	123	15	20	38
65	140	45	2	330	945	33 500	96 500	2 400	**29413**	96	133	16	21	42
70	150	48	2	365	1 040	37 000	106 000	2 200	**29414**	103	142	17	23	44
75	160	51	2	415	1 190	42 500	122 000	2 100	**29415**	109	152	18	24	47
80	170	54	2.1	460	1 380	47 000	141 000	1 900	**29416**	117	162	19	26	50
85	150	39	1.5	265	820	27 000	84 000	2 300	**29317**	114	143.5	13	19	50
	180	58	2.1	490	1 480	50 000	151 000	1 800	**29417**	125	170	21	28	54
90	155	39	1.5	285	915	29 100	93 500	2 300	**29318**	117	148.5	13	19	52
	190	60	2.1	545	1 680	56 000	172 000	1 700	**29418**	132	180	22	29	56
100	170	42	1.5	345	1 160	35 500	118 000	2 100	**29320**	129	163	14	20.8	58
	210	67	3	685	2 130	69 500	217 000	1 500	**29420**	146	200	24	32	62
110	190	48	2	445	1 500	45 000	152 000	1 800	**29322**	143	182	16	23	64
	230	73	3	845	2 620	86 500	267 000	1 400	**29422**	162	220	26	35	69
120	210	54	2.1	535	1 770	54 500	181 000	1 600	**29324**	159	200	18	26	70
	250	78	4	975	3 050	99 000	310 000	1 300	**29424**	174	236	29	37	74
130	225	58	2.1	615	2 100	62 500	215 000	1 500	**29326**	171	215	19	28	76
	270	85	4	1 080	3 550	110 000	360 000	1 200	**29426**	189	255	31	41	81
140	240	60	2.1	685	2 360	70 000	241 000	1 400	**29328**	183	230	20	29	82
	280	85	4	1 110	3 750	114 000	385 000	1 200	**29428**	199	268	31	41	86
150	215	39	1.5	340	1 340	34 500	136 000	1 800	**29230**	178	208	14	19	82
	250	60	2.1	675	2 390	68 500	243 000	1 400	**29330**	194	240	20	29	87
	300	90	4	1 280	4 350	131 000	445 000	1 100	**29430**	214	285	32	44	92
160	225	39	1.5	360	1 460	36 500	149 000	1 700	**29232**	188	219	14	19	86
	270	67	3	820	2 860	84 000	292 000	1 300	**29332**	208	260	24	32	92
	320	95	5	1 500	5 150	153 000	525 000	1 000	**29432**	229	306	34	45	99

1) Smallest allowable dimension for chamfer dimension *r*.

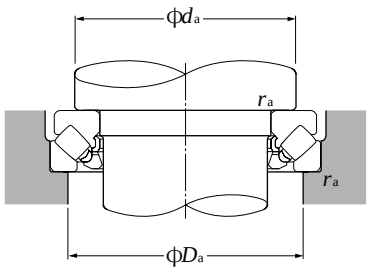

Equivalent bearing load

dynamic

$P_a = F_a + 1.2F_r$

static

$P_{oa} = F_a + 2.7F_r$

when $\frac{F_r}{F_a} \leqq 0.55$

Abutment and fillet dimensions mm			Mass kg
d_a min	D_a max	r_{as} max	(approx.)
90	108	1.5	2.78
100	115	2	3.44
105	125	2	4.19
115	132	2	5.07
120	140	2	6.09
115	135	1.5	2.94
130	150	2	7.2
120	140	1.5	3.08
135	157	2	8.38
130	150	1.5	3.94
150	175	2.5	11.5
145	165	2	5.78
165	190	2.5	15
160	180	2	7.92
180	205	3	18.6
170	195	2	9.76
195	225	3	23.7
185	205	2	11.4
205	235	3	25.2
179	196	1.5	4.56
195	215	2	12
220	250	3	30.5
189	206	1.5	4.88
210	235	2.5	15.9
230	265	4	37

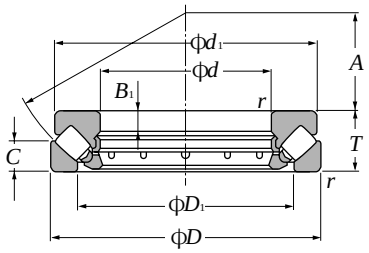

d 170～320mm

Boundary dimensions mm				Basic load ratings dynamic kN		Basic load ratings static kgf		Limiting speeds min-1	Bearing numbers	Dimensions mm				
d	D	T	$r_{s\,min}$ 1)	C_a	C_{oa}	C_a	C_{oa}	oil		D_1	d_1	B_1	C	A
170	240	42	1.5	425	1 770	43 500	180 000	1 600	**29234**	198	233	15	20	92
	280	67	3	855	3 050	87 000	310 000	1 200	**29334**	216	270	23	32	96
	340	103	5	1 660	5 750	169 000	590 000	940	**29434**	243	324	37	50	104
180	250	42	1.5	450	1 920	45 500	196 000	1 600	**29236**	208	243	15	20	97
	300	73	3	995	3 600	102 000	365 000	1 100	**29336**	232	290	25	35	103
	360	109	5	1 840	6 200	188 000	635 000	890	**29436**	255	342	39	52	110
190	270	48	2	530	2 230	54 000	227 000	1 400	**29238**	223	262	15	24	104
	320	78	4	1 150	4 250	117 000	430 000	1 100	**29338**	246	308	27	38	110
	380	115	5	2 010	6 800	205 000	695 000	840	**29438**	271	360	41	55	117
200	280	48	2	535	2 300	54 500	234 000	1 400	**29240**	236	271	15	24	108
	340	85	4	1 280	4 600	131 000	470 000	980	**29340**	261	325	29	41	116
	400	122	5	2 230	7 650	228 000	780 000	790	**29440**	286	380	43	59	122
220	300	48	2	555	2 480	56 500	253 000	1 300	**29244**	254	292	15	24	117
	360	85	4	1 390	5 200	141 000	530 000	940	**29344**	280	345	29	41	125
	420	122	6	2 300	8 100	235 000	825 000	760	**29444**	308	400	43	58	132
240	340	60	2.1	825	3 600	84 000	365 000	1 100	**29248**	283	330	19	30	130
	380	85	4	1 380	5 250	140 000	535 000	910	**29348**	300	365	29	41	135
	440	122	6	2 400	8 700	245 000	885 000	740	**29448**	326	420	43	59	142
260	360	60	2.1	870	3 950	88 500	400 000	1 100	**29252**	302	350	19	30	139
	420	95	5	1 710	6 800	175 000	695 000	810	**29352**	329	405	32	45	148
	480	132	6	2 740	10 000	279 000	1 020 000	670	**29452**	357	460	48	64	154
280	380	60	2.1	875	4 050	89 000	415 000	1 000	**29256**	323	370	19	30	150
	440	95	5	1 800	7 250	184 000	740 000	790	**29356**	348	423	32	46	158
	520	145	6	3 350	12 400	340 000	1 270 000	610	**29456**	387	495	52	68	166
300	420	73	3	1 190	5 350	121 000	545 000	870	**29260**	353	405	21	38	162
	480	109	5	2 140	8 250	218 000	840 000	700	**29360**	379	460	37	50	168
	540	145	6	3 450	13 200	350 000	1 340 000	590	**29460**	402	515	52	70	175
320	440	73	3	1 260	5 800	128 000	595 000	840	**29264**	372	430	21	38	172
	500	109	5	2 220	8 800	226 000	895 000	680	**29364**	399	482	37	53	180
	580	155	7.5	3 700	14 200	375 000	1 440 000	550	**29464**	435	555	55	75	191

1) Smallest allowable dimension for chamfer dimension *r*.

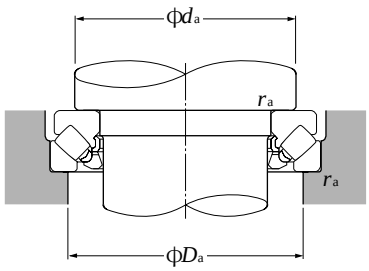

Equivalent bearing load
dynamic
$P_a = F_a + 1.2F_r$
static
$P_{oa} = F_a + 2.7F_r$
when $\frac{F_r}{F_a} \leqq 0.55$

Abutment and fillet dimensions mm			Mass kg
d_a min	D_a max	r_{as} max	(approx.)
201	218	1.5	6.02
220	245	2.5	16.6
245	285	4	45
211	228	1.5	6.27
235	260	2.5	21.2
260	300	4	52.9
225	245	2	8.8
250	275	3	26
275	320	4	62
235	255	2	9.14
265	295	3	31.9
290	335	4	73.3
260	275	2	9.94
285	315	3	34.5
310	355	5	77.8
285	305	2	17.5
300	330	3	36.6
330	375	5	82.6
305	325	2	18.6
330	365	4	52
360	405	5	108
325	345	2	19.8
350	390	4	54.6
390	440	5	140
355	380	2.5	30.9
380	420	4	75.8
410	460	5	147
375	400	2.5	33.5
400	440	4	79.9
435	495	6	181

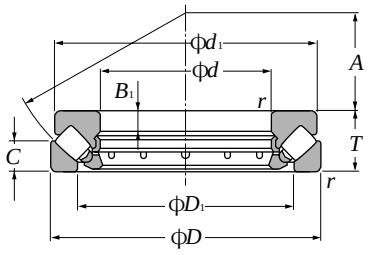

d 340～500mm

Boundary dimensions mm				Basic load ratings dynamic kN		Basic load ratings static kgf		Limiting speeds min-1	Bearing numbers	Dimensions mm				
d	D	T	$r_{s\,min}$ 1)	C_a	C_{oa}	C_a	C_{oa}	oil		D_1	d_1	B_1	C	A
340	460	73	3	1 240	5 800	126 000	590 000	820	**29268**	395	445	21	37	183
	540	122	5	2 650	10 700	270 000	1 090 000	610	**29368**	428	520	41	59	192
	620	170	7.5	4 400	17 500	445 000	1 790 000	500	**29468**	462	590	61	82	201
360	500	85	4	1 510	7 050	154 000	720 000	720	**29272**	423	485	25	44	194
	560	122	5	2 710	11 100	276 000	1 130 000	590	**29372**	448	540	41	59	202
	640	170	7.5	4 500	18 500	460 000	1 890 000	490	**29472**	480	610	61	82	210
380	520	85	4	1 590	7 650	162 000	780 000	700	**29276**	441	505	27	42	202
	600	132	6	3 200	13 300	325 000	1 360 000	550	**29376**	477	580	44	63	216
	670	175	7.5	4 900	19 700	500 000	2 010 000	470	**29476**	504	640	63	85	230
400	540	85	4	1 620	7 950	165 000	810 000	680	**29280**	460	526	27	42	212
	620	132	6	3 400	14 500	345 000	1 480 000	530	**29380**	494	596	44	64	225
	710	185	7.5	5 450	22 100	555 000	2 250 000	440	**29480**	534	680	67	89	236
420	580	95	5	2 100	10 400	214 000	1 060 000	620	**29284**	489	564	30	46	225
	650	140	6	3 600	15 500	365 000	1 580 000	500	**29384**	520	626	48	68	235
	730	185	7.5	5 500	22 800	560 000	2 330 000	430	**29484**	556	700	67	89	244
440	600	95	5	2 150	10 900	219 000	1 110 000	600	**29288**	508	585	30	49	235
	680	145	6	3 800	16 400	385 000	1 680 000	480	**29388**	548	655	49	70	245
	780	206	9.5	6 400	26 200	650 000	2 670 000	390	**29488**	588	745	74	100	260
460	620	95	5	2 150	11 000	219 000	1 120 000	590	**29292**	530	605	30	46	245
	710	150	6	4 200	18 500	430 000	1 880 000	460	**29392**	567	685	51	72	257
	800	206	9.5	6 600	27 900	670 000	2 840 000	380	**29492**	608	765	74	100	272
480	650	103	5	2 400	12 000	245 000	1 220 000	550	**29296**	556	635	33	55	259
	730	150	6	4 200	18 700	430 000	1 910 000	450	**29396**	590	705	51	72	270
	850	224	9.5	7 500	31 500	765 000	3 200 000	350	**29496**	638	810	81	108	280
500	670	103	5	2 540	13 000	259 000	1 330 000	530	**292/500**	574	654	33	55	268
	750	150	6	4 300	19 300	435 000	1 970 000	440	**293/500**	611	725	51	74	280
	870	224	9.5	7 850	33 000	805 000	3 350 000	340	**294/500**	661	830	81	107	290

1) Smallest allowable dimension for chamfer dimension *r*.

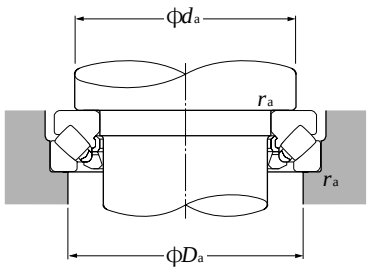

Equivalent bearing load
dynamic
$P_a = F_a + 1.2F_r$
static
$P_{oa} = F_a + 2.7F_r$
when $\frac{F_r}{F_a} \leqq 0.55$

Abutment and fillet dimensions mm			Mass kg
d_a min	D_a max	r_{as} max	(approx.)
395	420	2.5	34.4
430	470	4	107
465	530	6	230
420	455	3	50.5
450	495	4	112
485	550	6	240
440	475	3	53.4
480	525	5	143
510	575	6	267
460	490	3	55.8
500	550	5	148
540	610	6	321
490	525	4	76.6
525	575	5	172
560	630	6	333
510	545	4	79.6
550	600	5	195
595	670	8	428
530	570	4	82.8
575	630	5	221
615	690	8	443
555	595	4	98.6
595	650	5	228
645	730	8	552
575	615	4	102
615	670	5	235
670	750	8	569

Locknuts, Lockwashers & Lockplates

Contents

Locknuts ····· C- 2

Nuts ····· C- 8

Lockwashers ····· C-12

Lockplates ····· C-15

Snap rings for rolling bearings ····· C-16

Locknuts, Lockwashers & Lockplates

(For adapter sleeve, withdrawal sleeve and shaft)
Series AN

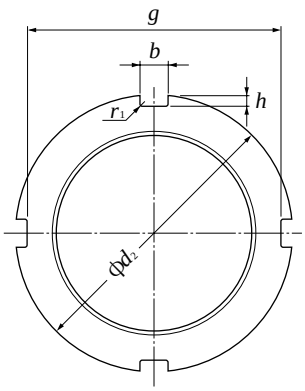

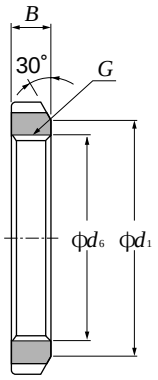

Bearing numbers	Dimensions mm									Mass kg	Reference	
	thread								r_1		bore no.[2] of adapter	lock-[3] washer No.
	G[1]	d_2	d_1	g	b	h	d_6	B	max	(approx.)		
AN00	M10 × 0.75	18	13.5	14	3	2	10.5	4	0.4	0.005	—	**AW00**
AN01	M12 × 1	22	17	18	3	2	12.5	4	0.4	0.007	—	**AW01**
AN02	M15 × 1	25	21	21	4	2	15.5	5	0.4	0.01	—	**AW02**
AN03	M17 × 1	28	24	24	4	2	17.5	5	0.4	0.013	—	**AW03**
AN04	M20 × 1	32	26	28	4	2	20.5	6	0.4	0.019	04	**AW04**
AN05	M25 × 1.5	38	32	34	5	2	25.8	7	0.4	0.025	05	**AW05**
AN06	M30 × 1.5	45	38	41	5	2	30.8	7	0.4	0.043	06	**AW06**
AN07	M35 × 1.5	52	44	48	5	2	35.8	8	0.4	0.053	07	**AW07**
AN08	M40 × 1.5	58	50	53	6	2.5	40.8	9	0.5	0.085	08	**AW08**
AN09	M45 × 1.5	65	56	60	6	2.5	45.8	10	0.5	0.119	09	**AW09**
AN10	M50 × 1.5	70	61	65	6	2.5	50.8	11	0.5	0.148	10	**AW10**
AN11	M55 × 2	75	67	69	7	3	56	11	0.5	0.158	11	**AW11**
AN12	M60 × 2	80	73	74	7	3	61	11	0.5	0.174	12	**AW12**
AN13	M65 × 2	85	79	79	7	3	66	12	0.5	0.203	13	**AW13**
AN14	M70 × 2	92	85	85	8	3.5	71	12	0.5	0.242	14	**AW14**
AN15	M75 × 2	98	90	91	8	3.5	76	13	0.5	0.287	15	**AW15**
AN16	M80 × 2	105	95	98	8	3.5	81	15	0.6	0.397	16	**AW16**
AN17	M85 × 2	110	102	103	8	3.5	86	16	0.6	0.451	17	**AW17**
AN18	M90 × 2	120	108	112	10	4	91	16	0.6	0.556	18	**AW18**
AN19	M95 × 2	125	113	117	10	4	96	17	0.6	0.658	19	**AW19**
AN20	M100 × 2	130	120	122	10	4	101	18	0.6	0.698	20	**AW20**
AN21	M105 × 2	140	126	130	12	5	106	18	0.7	0.845	21	**AW21**
AN22	M110 × 2	145	133	135	12	5	111	19	0.7	0.965	22	**AW22**
AN23	M115 × 2	150	137	140	12	5	116	19	0.7	1.01	—	**AW23**
AN24	M120 × 2	155	138	145	12	5	121	20	0.7	1.08	24	**AW24**
AN25	M125 × 2	160	148	150	12	5	126	21	0.7	1.19	—	**AW25**
AN26	M130 × 2	165	149	155	12	5	131	21	0.7	1.25	26	**AW26**
AN27	M135 × 2	175	160	163	14	6	136	22	0.7	1.55	—	**AW27**
AN28	M140 × 2	180	160	168	14	6	141	22	0.7	1.56	28	**AW28**
AN29	M145 × 2	190	171	178	14	6	146	24	0.7	2	—	**AW29**
AN30	M150 × 2	195	171	183	14	6	151	24	0.7	2.03	30	**AW30**
AN31	M155 × 3	200	182	186	16	7	156.5	25	0.7	2.21	—	**AW31**
AN32	M160 × 3	210	182	196	16	7	161.5	25	0.7	2.59	32	**AW32**
AN33	M165 × 3	210	193	196	16	7	166.5	26	0.7	2.43	—	**AW33**
AN34	M170 × 3	220	193	206	16	7	171.5	26	0.7	2.8	34	**AW34**
AN36	M180 × 3	230	203	214	18	8	181.5	27	0.7	3.07	36	**AW36**
AN38	M190 × 3	240	214	224	18	8	191.5	28	0.7	3.39	38	**AW38**
AN40	M200 × 3	250	226	234	18	8	201.5	29	0.7	3.69	40	**AW40**

1) Standard thread shapes and dimensions are as per **JIS B0207** (metric thread).
2) Uses adapter series **H31, H2**, and **H23**
3) Can also use washers with straight inner tabs (code "**X**").

Reference withdrawal sleeve No.								Shaft mm (for shaft)
AH30	AH240	AH31	AH241	AH2	AH32	AH3	AH23	
–	–	–	–	–	–	–	–	10
–	–	–	–	–	–	–	–	12
–	–	–	–	–	–	–	–	15
–	–	–	–	–	–	–	–	17
–	–	–	–	–	–	–	–	20
–	–	–	–	–	–	–	–	25
–	–	–	–	–	–	–	–	30
–	–	–	–	–	–	–	–	35
–	–	–	–	–	–	–	–	40
–	–	–	–	**AH208**	–	**AH 308**	**AH 2308**	45
–	–	–	–	**AH209**	–	**AH 309**	**AH 2309**	50
–	–	–	–	**AH210**	–	**AHX310**	**AHX2310**	55
–	–	–	–	**AH211**	–	**AHX311**	**AHX2311**	60
–	–	–	–	**AH212**	–	**AHX312**	**AHX2312**	65
–	–	–	–	–	–	–	–	70
–	–	–	–	**AH213**	–	**AH 313**	**AH 2313**	75
–	–	–	–	**AH214**	–	**AH 314**	**AHX2314**	80
–	–	–	–	**AH215**	–	**AH 315**	**AHX2315**	85
–	–	–	–	**AH216**	–	**AH 316**	**AHX2316**	90
–	–	–	–	**AH217**	–	**AHX317**	**AHX2317**	95
–	–	–	–	**AH218**	**AHX3218**	**AHX318**	**AHX2318**	100
–	–	–	–	**AH219**	–	**AHX319**	**AHX2319**	105
–	–	–	–	**AH220**	**AHX3220**	**AHX320**	**AHX2320**	110
–	–	–	**AH24122**	**AH221**	–	**AHX321**	–	115
–	–	**AHX3122**	–	**AH222**	–	**AHX322**	–	120
–	**AH24024**	–	–	–	**AHX3222**	–	**AHX2322**	125
AHX3024	–	**AHX3124**	**AH24124**	**AH224**	–	**AHX324**	–	130
–	**AH24026**	–	–	–	**AHX3224**	–	**AHX2324**	135
AHX3026	–	**AHX3126**	**AH24126**	**AH226**	–	**AHX326**	–	140
–	**AH24028**	–	–	–	**AHX3226**	–	**AHX2326**	145
AHX3028	–	**AHX3128**	**AH24128**	**AH228**	–	**AHX328**	–	150
–	**AH24030**	–	–	–	**AHX3228**	–	**AHX2328**	155
AHX3030	–	–	**AH24130**	**AH230**	–	–	–	160
–	–	**AHX3130**	–	–	**AHX3230**	**AHX330**	**AHX2330**	165
AH 3032	**AH24032**	–	**AH24132**	**AH232**	–	–	–	170
AH 3034	**AH24034**	**AH 3132**	**AH24134**	**AH234**	**AH 3232**	**AH 332**	**AH 2332**	180
AH 3036	**AH24036**	**AH 3134**	**AH24136**	**AH236**	**AH 3234**	**AH 334**	**AH 2334**	190
–	**AH24038**	**AH 3136**	**AH24138**	–	**AH 3236**	–	**AH 2336**	200

(For adapter sleeve, withdrawal sleeve and shaft)
Series AN

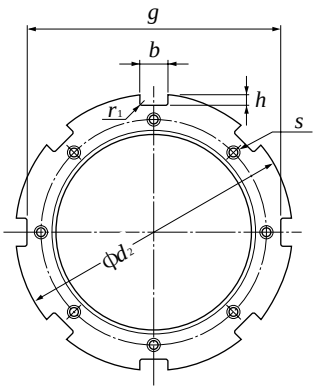

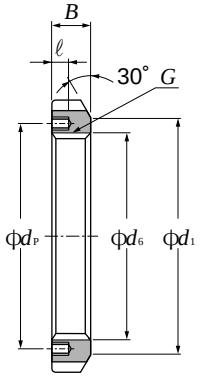

Bearing numbers	Dimensions mm												Mass kg
	thread								r_1		thread		
	$G^{1)}$	d_2	d_1	g	b	h	d_6	B	max	l	$s^{2)}$	d_P	(approx.)
AN 44	Tr220 × 4	280	250	260	20	10	222	32	0.8	15	M 8 × 1.25	238	5.2
AN 48	Tr240 × 4	300	270	280	20	10	242	34	0.8	15	M 8 × 1.25	258	5.95
AN 52	Tr260 × 4	330	300	306	24	12	262	36	0.8	18	M10 × 1.5	281	8.05
AN 56	Tr280 × 4	350	320	326	24	12	282	38	0.8	18	M10 × 1.5	301	9.05
AN 60	Tr300 × 4	380	340	356	24	12	302	40	0.8	18	M10 × 1.5	326	11.8
AN 64	Tr320 × 5	400	360	376	24	12	322.5	42	0.8	18	M10 × 1.5	345	13.1
AN 68	Tr340 × 5	440	400	410	28	15	342.5	55	1	21	M12 × 1.75	372	23.1
AN 72	Tr360 × 5	460	420	430	28	15	362.5	58	1	21	M12 × 1.75	392	25.1
AN 76	Tr380 × 5	490	450	454	32	18	382.5	60	1	21	M12 × 1.75	414	30.9
AN 80	Tr400 × 5	520	470	484	32	18	402.5	62	1	27	M16 × 2	439	36.9
AN 84	Tr420 × 5	540	490	504	32	18	422.5	70	1	27	M16 × 2	459	43.5
AN 88	Tr440 × 5	560	510	520	36	20	442.5	70	1	27	M16 × 2	477	45.3
AN 92	Tr460 × 5	580	540	540	36	20	462.5	75	1	27	M16 × 2	497	50.4
AN 96	Tr480 × 5	620	560	580	36	20	482.5	75	1	27	M16 × 2	527	62.2
AN100	Tr500 × 5	630	580	584	40	23	502.5	80	1	27	M16 × 2	539	63.3

1) Standard thread shapes and dimensions are as per **JIS B0216** (metric trapezoidal screw thread).
2) Thread dimensions are as per **JIS B0205** (metric coarse screw thread).
3) Applied to adapter series **H31, H32**, and **H23**

bore no.[3] of adapter	Reference lock-plate No.	Shaft mm (for shaft)
44	**AL 44**	220
48	**AL 44**	240
52	**AL 52**	260
56	**AL 52**	280
60	**AL 60**	300
64	**AL 64**	320
68	**AL 68**	340
72	**AL 68**	360
76	**AL 76**	380
80	**AL 80**	400
84	**AL 80**	420
88	**AL 88**	440
92	**AL 88**	460
96	**AL 96**	480
/500	**AL100**	500

(For adapter sleeve and shaft)
Series ANL

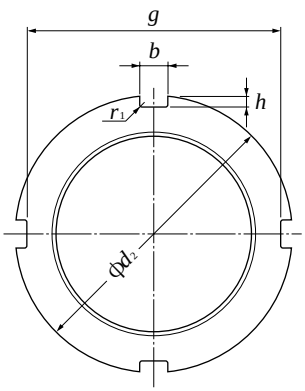

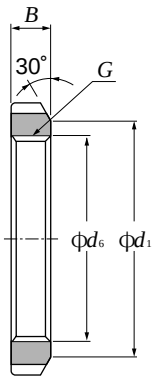

Bearing numbers	Dimensions mm									Mass kg	Reference bore no.[2] of adapter	Reference lock-washer no.[3]	Reference shaft mm
	thread G[1]	d_2	d_1	g	b	h	d_6	B	r_1 max	(approx.)			(for shaft)
ANL24	M120 × 2	145	133	135	12	5	121	20	0.7	0.78	24	**AWL24**	120
ANL26	M130 × 2	155	143	145	12	5	131	21	0.7	0.88	26	**AWL26**	130
ANL28	M140 × 2	165	151	153	14	6	141	22	0.7	0.99	28	**AWL28**	140
ANL30	M150 × 2	180	164	168	14	6	151	24	0.7	1.38	30	**AWL30**	150
ANL32	M160 × 3	190	174	176	16	7	161.5	25	0.7	1.56	32	**AWL32**	160
ANL34	M170 × 3	200	184	186	16	7	171.5	26	0.7	1.72	34	**AWL34**	170
ANL36	M180 × 3	210	192	194	18	8	181.5	27	0.7	1.95	36	**AWL36**	180
ANL38	M190 × 3	220	202	204	18	8	191.5	28	0.7	2.08	38	**AWL38**	190
ANL40	M200 × 3	240	218	224	18	8	201.5	29	0.7	2.98	40	**AWL40**	200

1) Standard thread shapes and dimensions are as per **JIS B0207** (metric fine thread).
2) Applied to adapter series **H30**.
3) Applicable also to washers with straight inner tabs (code "**X**").

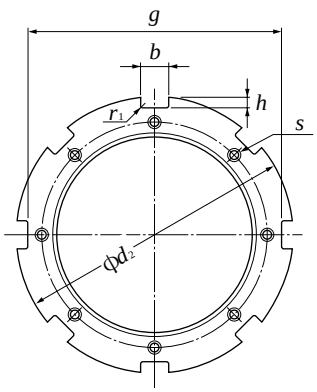

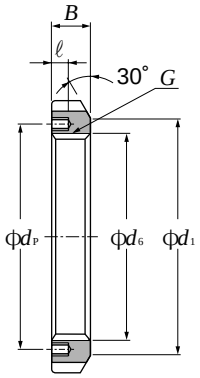

Bearing numbers	Dimensions mm												Mass kg
	thread $G^{1)}$	d_2	d_1	g	b	h	d_6	B	r_1 max	l	thread $s^{2)}$	d_P	(approx.)
ANL 44	Tr220 × 4	260	242	242	20	9	222	30	0.8	12	M 6 × 1	229	3.09
ANL 48	Tr240 × 4	290	270	270	20	10	242	34	0.8	15	M 8 × 1.25	253	5.16
ANL 52	Tr260 × 4	310	290	290	20	10	262	34	0.8	15	M 8 × 1.25	273	5.67
ANL 56	Tr280 × 4	330	310	310	24	10	282	38	0.8	15	M 8 × 1.25	293	6.78
ANL 60	Tr300 × 4	360	336	336	24	12	302	42	0.8	15	M 8 × 1.25	316	9.62
ANL 64	Tr320 × 5	380	356	356	24	12	322.5	42	0.8	15	M 8 × 1.25	335	9.94
ANL 68	Tr340 × 5	400	376	376	24	12	342.5	45	1	15	M 8 × 1.25	355	11.7
ANL 72	Tr360 × 5	420	394	394	28	13	362.5	45	1	15	M 8 × 1.25	374	12
ANL 76	Tr380 × 5	450	422	422	28	14	382.5	48	1	18	M10 × 1.5	398	14.9
ANL 80	Tr400 × 5	470	442	442	28	14	402.5	52	1	18	M10 × 1.5	418	16.9
ANL 84	Tr420 × 5	490	462	462	32	14	422.5	52	1	18	M10 × 1.5	438	17.4
ANL 88	Tr440 × 5	520	490	490	32	15	442.5	60	1	21	M12 × 1.75	462	26.2
ANL 92	Tr460 × 5	540	510	510	32	15	462.5	60	1	21	M12 × 1.75	482	29.6
ANL 96	Tr480 × 5	560	530	530	36	15	482.5	60	1	21	M12 × 1.75	502	28.3
ANL100	Tr500 × 5	580	550	550	36	15	502.5	68	1	21	M12 × 1.75	522	33.6

1) Standard thread shapes and dimensions are as per **JIS B0216** (metric trapezoidal screw thread).
2) Thread dimensions are as per **JIS B0205** (metric coarse screw thread).
3) Applied to adapter series **H30**.

Reference bore no.[3)] of adapter	lock-plate no.	shaft mm (for shaft)	Bearing numbers
44	ALL44	220	**ANL 44**
48	ALL48	240	**ANL 48**
52	ALL48	260	**ANL 52**
56	ALL56	280	**ANL 56**
60	ALL60	300	**ANL 60**
64	ALL64	320	**ANL 64**
68	ALL64	340	**ANL 68**
72	ALL72	360	**ANL 72**
76	ALL76	380	**ANL 76**
80	ALL76	400	**ANL 80**
84	ALL84	420	**ANL 84**
88	ALL88	440	**ANL 88**
92	ALL88	460	**ANL 92**
96	ALL96	480	**ANL 96**
/500	ALL96	500	**ANL100**

(For withdrawal and shaft)
Series HN

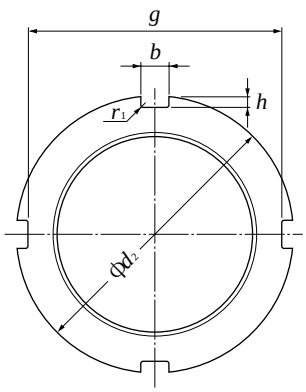

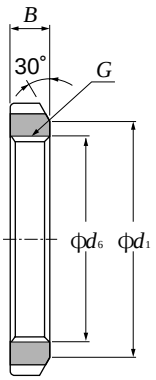

Bearing numbers	Dimensions									Mass	Reference		
	thread	mm								kg	withdrawal sleeve no.		
									r_1		AH240	AH31	AH241
	$G^{1)}$	d_2	d_1	g	b	h	d_6	B	max	(approx.)			
HN 42	Tr210 × 4	270	238	250	20	10	212	30	0.8	4.75	**AH24040**	**AH 3138**	**AH24140**
HN 44	Tr220 × 4	280	250	260	20	10	222	32	0.8	5.35	**—**	**AH 3140**	**—**
HN 46	Tr230 × 4	290	260	270	20	10	232	34	0.8	5.8	**AH24044H**	**—**	**AH24144H**
HN 48	Tr240 × 4	300	270	280	20	10	242	34	0.8	6.2	**—**	**AH 3144**	**—**
HN 50	Tr250 × 4	320	290	300	20	10	252	36	0.8	7	**AH24048H**	**—**	**—**
HN 52	Tr260 × 4	330	300	306	24	12	262	36	0.8	8.55	**—**	**AH 3148**	**AH24148H**
HN 54	Tr270 × 4	340	310	316	24	12	272	38	0.8	9.2	**AH24052H**	**—**	**—**
HN 56	Tr280 × 4	350	320	326	24	12	282	38	0.8	10	**—**	**—**	**AH24152H**
HN 58	Tr290 × 4	370	330	346	24	12	292	40	0.8	11.8	**AH24056H**	**AH 3152**	**—**
HN 60	Tr300 × 4	380	340	356	24	12	302	40	0.8	12	**—**	**—**	**AH24156H**
HN 62	Tr310 × 5	390	350	366	24	12	312.5	42	0.8	13.4	**AH24060H**	**AH 3156**	**—**
HN 64	Tr320 × 5	400	360	376	24	12	322.5	42	0.8	13.5	**—**	**—**	**AH24160H**
HN 66	Tr330 × 5	420	380	390	28	15	332.5	52	1	20.4	**AH24064H**	**AH 3160**	**—**
HN 68	Tr340 × 5	440	400	410	28	15	342.5	55	1	24.5	**—**	**—**	**AH24164H**
HN 70	Tr350 × 5	450	410	420	28	15	352.5	55	1	25.2	**—**	**AH 3164**	**—**
HN 72	Tr360 × 5	460	420	430	28	15	362.5	58	1	27.5	**—**	**—**	**AH24168H**
HN 74	Tr370 × 5	470	430	440	28	15	372.5	58	1	28.2	**—**	**AH 3168**	**—**
HN 76	Tr380 × 5	490	450	454	32	18	382.5	60	1	33.5	**—**	**—**	**AH24172H**
HN 80	Tr400 × 5	520	470	484	32	18	402.5	62	1	40	**—**	**AH 3172**	**AH24176H**
HN 84	Tr420 × 5	540	490	504	32	18	422.5	70	1	46.9	**—**	**AH 3176**	**AH24180H**
HN 88	Tr440 × 5	560	510	520	36	20	442.5	70	1	48.5	**—**	**AH 3180**	**AH24184H**
HN 92	Tr460 × 5	580	540	540	36	20	462.5	75	1	55	**—**	**AH 3184**	**AH24188H**
HN 96	Tr480 × 5	620	560	580	36	20	482.5	75	1	67	**—**	**AHX3188**	**AH24192H**
HN100	Tr500 × 5	630	590	590	40	23	502.5	80	1	69	**—**	**—**	**AH24196H**
HN102	Tr510 × 6	650	590	604	40	23	513	80	1	75	**—**	**AHX3192**	**—**
HN106	Tr530 × 6	670	610	624	40	23	533	80	1	78	**—**	**AHX3196**	**AH241/500H**
HN110	Tr550 × 6	700	640	654	40	23	553	80	1	92.5	**—**	**AHX31/500**	**—**

1) Standard thread shapes and dimensions are as per **JIS B0216** (metric trapezoidal screw thread).

Reference withdrawal sleeve no. AH22	AH32	AH23
AH2238	**AH 3238**	**AH2338**
AH2240	**AH 3240**	**AH2340**
—	—	—
AH2244	—	**AH2344**
—	—	—
AH2248	—	**AH2348**
—	—	—
—	—	—
AH2252	—	**AH2352**
—	—	—
AH2256	—	**AH2356**
—	—	—
AH2260	**AH 3260**	—
—	—	—
AH2264	**AH 3264**	—
—	—	—
—	**AH 3268**	—
—	—	—
—	**AH 3272**	—
—	**AH 3276**	—
—	**AH 3280**	—
—	**AH 3284**	—
—	**AHX3288**	—
—	—	—
—	**AHX3292**	—
—	**AHX3296**	—
—	**AHX32/500**	—

(For withdrawal and shaft)
Series HNL

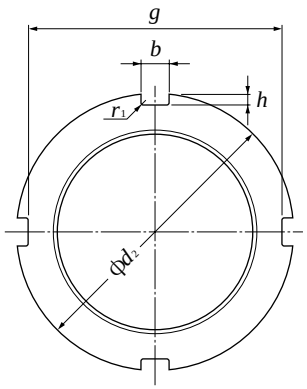

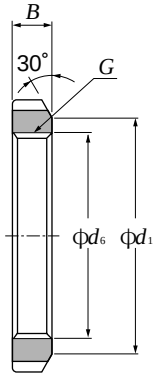

Bearing numbers	Dimensions mm									Mass kg	Reference withdrawal sleeve no.		
	thread $G^{1)}$	d_2	d_1	g	b	h	d_6	B	r_1 max	(approx.)	AH30	AH24D	AH2
HNL 41	Tr205 × 4	250	232	234	18	8	207	30	0.8	3.43	**AH 3038**	–	**AH238**
HNL 43	Tr215 × 4	260	242	242	20	9	217	30	0.8	3.72	**AH 3040**	–	**AH240**
HNL 47	Tr235 × 4	280	262	262	20	9	237	34	0.8	4.6	**AH 3044**	–	**AH244**
HNL 52	Tr260 × 4	310	290	290	20	10	262	34	0.8	5.8	**AH 3048**	–	**AH248**
HNL 56	Tr280 × 4	330	310	310	24	10	282	38	0.8	6.72	**AH 3052**	–	**AH252**
HNL 60	Tr300 × 4	360	336	336	24	12	302	42	0.8	9.6	**AH 3056**	–	**AH256**
HNL 64	Tr320 × 5	380	356	356	24	12	322.5	42	1	10.3	**AH 3060**	–	–
HNL 69	Tr345 × 5	410	384	384	28	13	347.5	45	1	11.5	**AH 3064**	–	–
HNL 72	Tr360 × 5	420	394	394	28	13	362.5	45	1	12.1	–	**AH24068H**	–
HNL 73	Tr365 × 5	430	404	404	28	13	367.5	48	1	14.2	**AH 3068**	–	–
HNL 76	Tr380 × 5	450	422	422	28	14	382.5	48	1	16	–	**AH24072H**	–
HNL 77	Tr385 × 5	450	422	422	28	14	387.5	48	1	15	**AH 3072**	–	–
HNL 80	Tr400 × 5	470	442	442	28	14	402.5	52	1	18.5	–	**AH24076H**	–
HNL 82	Tr410 × 5	480	452	452	32	14	412.5	52	1	19	**AH 3076**	–	–
HNL 84	Tr420 × 5	490	462	462	32	14	422.5	52	1	19.4	–	**AH24080H**	–
HNL 86	Tr430 × 5	500	472	472	32	14	432.5	52	1	19.8	**AH 3080**	–	–
HNL 88	Tr440 × 5	520	490	490	32	15	442.5	60	1	27	–	**AH24084H**	–
HNL 90	Tr450 × 5	520	490	490	32	15	452.5	60	1	23.8	**AH 3084**	–	–
HNL 92	Tr460 × 5	540	510	510	32	15	462.5	60	1	28	–	**AH24088H**	–
HNL 94	Tr470 × 5	540	510	510	32	15	472.5	60	1	25	**AHX3088**	–	–
HNL 96	Tr480 × 5	560	530	530	36	15	482.5	60	1	29.5	–	**AH24092H**	–
HNL 98	Tr490 × 5	580	550	550	36	15	492.5	60	1	34	**AHX3092**	–	–
HNL100	Tr500 × 5	580	550	550	36	15	502.5	68	1	35	–	**AH24096H**	–
HNL104	Tr520 × 6	600	570	570	36	15	523	68	1	37	**AHX3096**	–	–
HNL106	Tr530 × 6	630	590	590	40	20	533	68	1	47	–	**AH240/500H**	–
HNL108	Tr540 × 6	630	590	590	40	20	543	68	1	43.5	**AHX30/500**	–	–

1) Standard thread shapes and dimensions are as per **JIS B0216** (metric trapezoidal screw thread).

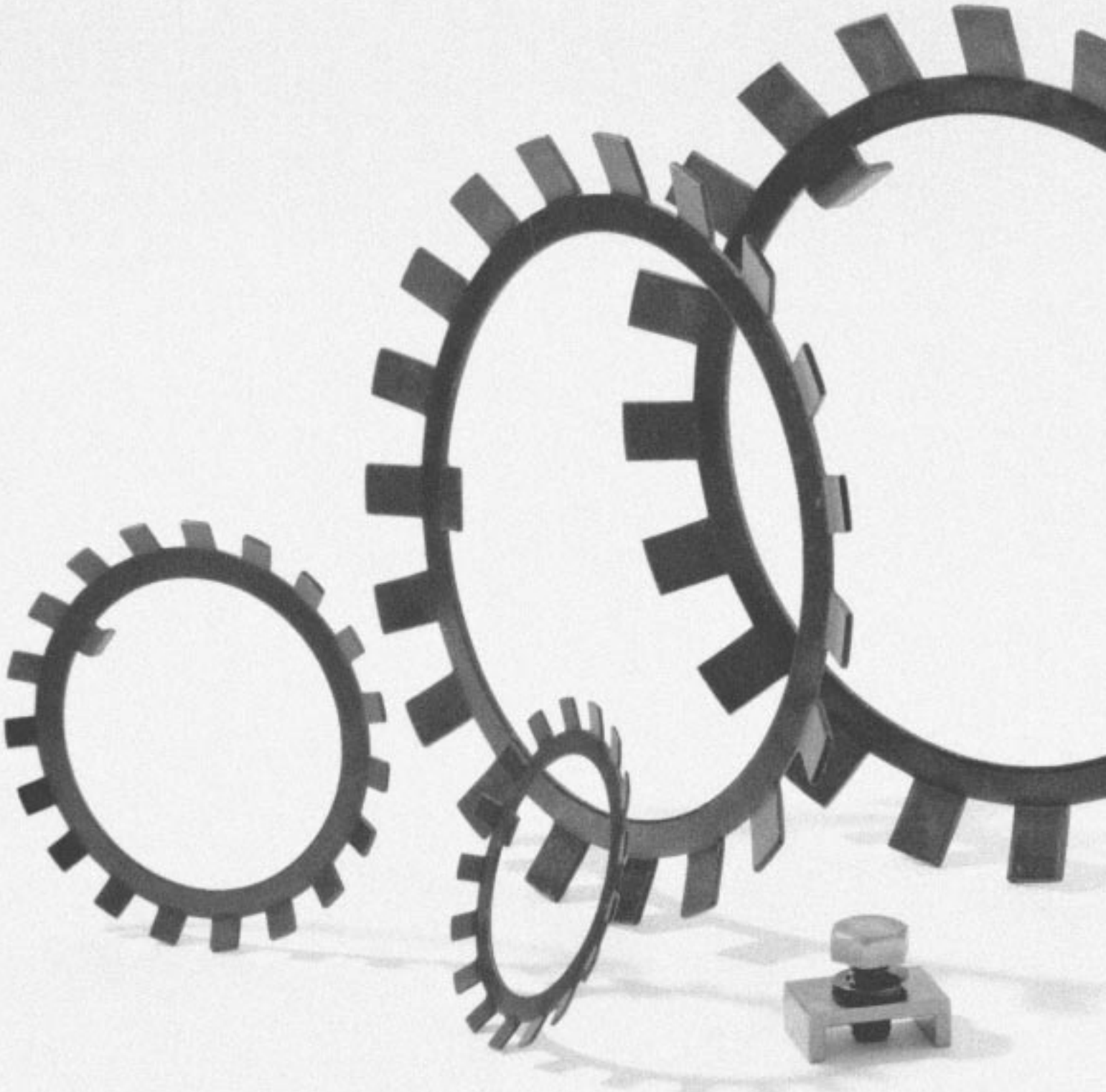

Series AW

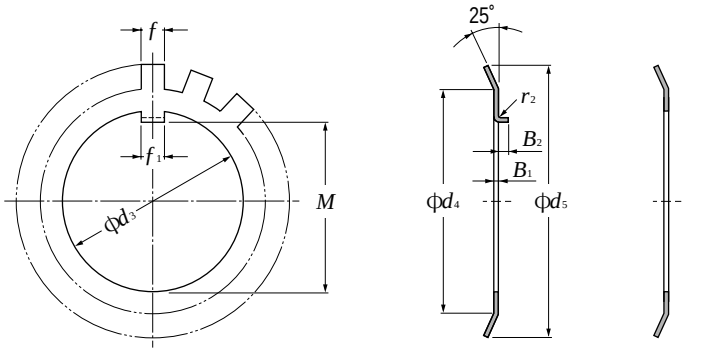

Bent inner tab type **Straight inner tab type**

Bearing numbers		Dimensions mm									No.of tabs	Mass
									bent inner tab type			kg
bent inner tab type	straight inner tab type	d_3	M	f_1	B_1	f	d_4	d_5	r_2	B_2		100 pieces (approx.)
AW00	**AW00X**	10	8.5	3	1	3	13.5	21	0.5	2	9	0.131
AW01	**AW01X**	12	10.5	3	1	3	17	25	0.5	2	11	0.192
AW02	**AW02X**	15	13.5	4	1	4	21	28	1	2.5	13	0.253
AW03	**AW03X**	17	15.5	4	1	4	24	32	1	2.5	13	0.313
AW04	**AW04X**	20	18.5	4	1	4	26	36	1	2.5	13	0.35
AW05	**AW05X**	25	23	5	1.2	5	32	42	1	2.5	13	0.64
AW06	**AW06X**	30	27.5	5	1.2	5	38	49	1	2.5	13	0.78
AW07	**AW07X**	35	32.5	6	1.2	5	44	57	1	2.5	15	1.04
AW08	**AW08X**	40	37.5	6	1.2	6	50	62	1	2.5	15	1.23
AW09	**AW09X**	45	42.5	6	1.2	6	56	69	1	2.5	17	1.52
AW10	**AW10X**	50	47.5	6	1.2	6	61	74	1	2.5	17	1.6
AW11	**AW11X**	55	52.5	8	1.2	7	67	81	1	4	17	1.96
AW12	**AW12X**	60	57.5	8	1.5	7	73	86	1.2	4	17	2.53
AW13	**AW13X**	65	62.5	8	1.5	7	79	92	1.2	4	19	2.9
AW14	**AW14X**	70	66.5	8	1.5	8	85	98	1.2	4	19	3.34
AW15	**AW15X**	75	71.5	8	1.5	8	90	104	1.2	4	19	3.56
AW16	**AW16X**	80	76.5	10	1.8	8	95	112	1.2	4	19	4.64
AW17	**AW17X**	85	81.5	10	1.8	8	102	119	1.2	4	19	5.24
AW18	**AW18X**	90	86.5	10	1.8	10	108	126	1.2	4	19	6.23
AW19	**AW19X**	95	91.5	10	1.8	10	113	133	1.2	4	19	6.7
AW20	**AW20X**	100	96.5	12	1.8	10	120	142	1.2	6	19	7.65
AW21	**AW21X**	105	100.5	12	1.8	12	126	145	1.2	6	19	8.26
AW22	**AW22X**	110	105.5	12	1.8	12	133	154	1.2	6	19	9.4
AW23	**AW23X**	115	110.5	12	2	12	137	159	1.5	6	19	10.8
AW24	**AW24X**	120	115	14	2	12	138	164	1.5	6	19	10.5
AW25	**AW25X**	125	120	14	2	12	148	170	1.5	6	19	11.8
AW26	**AW26X**	130	125	14	2	12	149	175	1.5	6	19	11.3
AW27	**AW27X**	135	130	14	2	14	160	185	1.5	6	19	14.4
AW28	**AW28X**	140	135	16	2	14	160	192	1.5	8	19	14.2
AW29	**AW29X**	145	140	16	2	14	171	202	1.5	8	19	16.8
AW30	**AW30X**	150	145	16	2	14	171	205	1.5	8	19	15.5
AW31	**AW31X**	155	147.5	16	2.5	16	182	212	1.5	8	19	20.9
AW32	**AW32X**	160	154	18	2.5	16	182	217	1.5	8	19	22.2
AW33	**AW33X**	165	157.5	18	2.5	16	193	222	1.5	8	19	24.1
AW34	**AW34X**	170	164	18	2.5	16	193	232	1.5	8	19	24.7
AW36	**AW36X**	180	174	20	2.5	18	203	242	1.5	8	19	26.8
AW38	**AW38X**	190	184	20	2.5	18	214	252	1.5	8	19	27.8
AW40	**AW40X**	200	194	20	2.5	18	226	262	1.5	8	19	29.3

1) Uses adapter series **H31, H2, H32, H3**, and **H23**.

bore no.[1] of adapter	Reference locknut no.	shaft mm (for shaft)
–	**AN00**	10
–	**AN01**	12
–	**AN02**	15
–	**AN03**	17
04	**AN04**	20
05	**AN05**	25
06	**AN06**	30
07	**AN07**	35
08	**AN08**	40
09	**AN09**	45
10	**AN10**	50
11	**AN11**	55
12	**AN12**	60
13	**AN13**	65
14	**AN14**	70
15	**AN15**	75
16	**AN16**	80
17	**AN17**	85
18	**AN18**	90
19	**AN19**	95
20	**AN20**	100
21	**AN21**	105
22	**AN22**	110
–	**AN23**	115
24	**AN24**	120
–	**AN25**	125
26	**AN26**	130
–	**AN27**	135
28	**AN28**	140
–	**AN29**	145
30	**AN30**	150
–	**AN31**	155
32	**AN32**	160
–	**AN33**	165
34	**AN34**	170
36	**AN36**	180
38	**AN38**	190
40	**AN40**	200

Allowable washer dimensions Units mm

Nominal bore dia. d_3 mm Over	up to/incl	Dimensional tolerance for distance from inner tab to bore surface ΔM High	Low	Dimension tolerance for width of inner tab Δ_{f1} High	Low
6	50	+0.3	0	+0.2	−0.2
50	80	+0.3	0	+0.5	−0.5
80	120	+0.5	0	+0.7	−0.7
120	200	+0.5	0	+1	−1

Above table is applicable to AWL series.

Note: Narrow slit type adapter sleeves appended with the **H2, H3**,and **H23** series code suffix "**X**", use straight inner tab washers (marked with "**X**"); wide slit type adapter sleeves without the suffix "**X**" can either straight or bent inner tab washers.

Series AWL

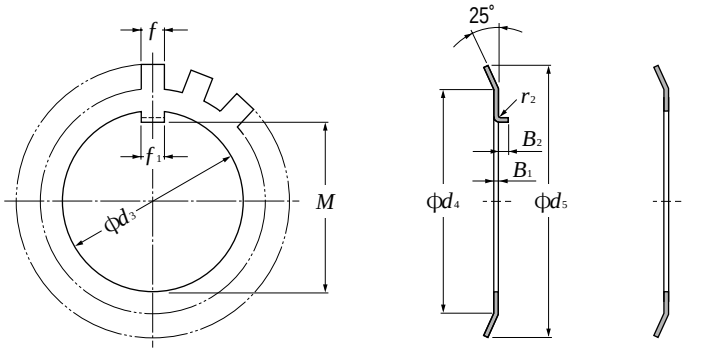

Bent inner tab type **Straight inner tab type**

Bearing numbers		Dimensions mm							NO.of tabs Mass kg				Reference		
bent inner tab type	straight inner tab type	d_3	M	f_1	B_1	f	d_4	d_5	bent inner tab type r_2	bent inner tab type B_2		100 pieces (approx.)	bore no.[1] of adapter	locknut no.	shaft mm (for shaft)
AWL24	**AWL24X**	120	115	14	2	12	133	155	1.5	6	19	7.7	24	**ANL24**	120
AWL26	**AWL26X**	130	125	14	2	12	143	165	1.5	6	19	8.7	26	**ANL26**	130
AWL28	**AWL28X**	140	135	16	2	14	151	175	1.5	8	19	10.9	28	**ANL28**	140
AWL30	**AWL30X**	150	145	16	2	14	164	190	1.5	8	19	11.3	30	**ANL30**	150
AWL32	**AWL32X**	160	154	18	2.5	16	174	200	1.5	8	19	16.2	32	**ANL32**	160
AWL34	**AWL34X**	170	164	18	2.5	16	184	210	1.5	8	19	19	34	**ANL34**	170
AWL36	**AWL36X**	180	174	20	2.5	18	192	220	1.5	8	19	18	36	**ANL36**	180
AWL38	**AWL38X**	190	184	20	2.5	18	202	230	1.5	8	19	20.5	38	**ANL38**	190
AWL40	**AWL40X**	200	194	20	2.5	18	218	250	1.5	8	19	21.4	40	**ANL40**	200

1) Uses adapter series **H31, H32,** and **H23**.
Note: Wide slit type adapter sleeves without the suffix "**X**" can use either straight or bent inner tab washers.

Series AL, ALL

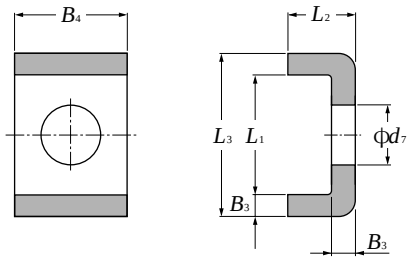

Bearing numbers	Dimensions mm						Mass kg 100 pieces (approx.)	Reference locknut no.
	B_3	B_4	L_2	d_7	L_1	L_3		
AL 44	4	20	12	9	22.5	30.5	2.6	**AN44,AN48**
AL 52	4	24	12	12	25.5	33.5	3.39	**AN52,AN56**
AL 60	4	24	12	12	30.5	38.5	3.79	**AN60**
AL 64	5	24	15	12	31	41	5.35	**AN64**
AL 68	5	28	15	14	38	48	6.65	**AN68,AN72**
AL 76	5	32	15	14	40	50	7.96	**AN76**
AL 80	5	32	15	18	45	55	8.2	**AN80,AN84**
AL 88	5	36	15	18	43	53	9	**AN88,AN92**
AL 96	5	36	15	18	53	63	10.4	**AN96**
AL100	5	40	15	18	45	55	10.5	**AN100**

Note: Series **AL** uses series **H31,H32**,and **H23** adapters.

Bearing numbers	Dimensions mm						Mass kg 100 pieces (approx.)	Reference locknut no.
	B_3	B_4	L_2	d_7	L_1	L_3		
ALL44	4	20	12	7	13.5	21.5	2.12	**ANL44**
ALL48	4	20	12	9	17.5	25.5	2.29	**ANL48,ANL52**
ALL56	4	24	12	9	17.5	25.5	2.92	**ANL56**
ALL60	4	24	12	9	20.5	28.5	3.16	**ANL60**
ALL64	5	24	15	9	21	31	4.56	**ANL64,ANL68**
ALL72	5	28	15	9	20	30	5.03	**ANL72**
ALL76	5	28	15	12	24	34	5.28	**ANL76,ANL80**
ALL84	5	32	15	12	24	34	6.11	**ANL84**
ALL88	5	32	15	14	28	38	6.45	**ANL88,ANL92**
ALL96	5	36	15	14	28	38	7.29	**ANL96,ANL100**

Note: Series **ALL** uses series **H30** adapters.

Snap rings
for dimension series 18 and 19 bearings

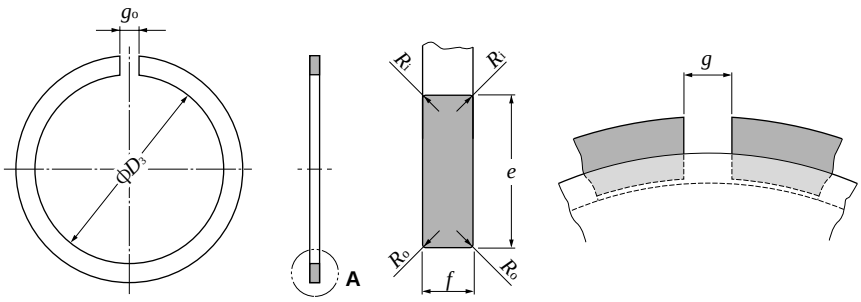

A (enlarged view)

Dimension unit: mm

Bearing No.	Dimensional tolerance of bore							snap ring fitted inside groove		nominal bearing outer diameter			Reference		applicable bearing dimension series	
		tolerance of ΔD_3							snap ring outer diameter				thickness variation		18	19
	D_3	Upper	Lower	e max	e min	f max	f min	g	D_2 max	D	R_i min	R_o min	V_f max	g_o	nominal bearing outer diameter d	
NR1022	20.5	0	− 0.3	2.00	1.85	0.7	0.6	2	24.8	22	0.2	0.1	0.06	1	−	10
NR1024	22.5	0	− 0.3	2.00	1.85	0.7	0.6	2	26.8	24	0.2	0.1	0.06	1	−	12
NR1028	26.4	0	− 0.3	2.05	1.90	0.85	0.75	3	30.8	28	0.25	0.15	0.06	2	−	15
NR1030	28.3	0	− 0.3	2.05	1.90	0.85	0.75	3	32.8	30	0.25	0.15	0.06	2	−	17
NR1032	30.3	0	− 0.3	2.05	1.90	0.85	0.75	3	34.8	32	0.25	0.15	0.06	2	20	−
NR1034	32.3	0	− 0.3	2.05	1.90	0.85	0.75	3	36.8	34	0.25	0.15	0.06	2	22	−
NR1037	35.3	0	− 0.3	2.05	1.90	0.85	0.75	3	39.8	37	0.25	0.15	0.06	2	25	20
NR1039	37.3	0	− 0.3	2.05	1.90	0.85	0.75	3	41.8	39	0.25	0.15	0.06	2	−	22
NR1040	38.3	0	− 0.3	2.05	1.90	0.85	0.75	3	42.8	40	0.25	0.15	0.06	2	28	−
NR1042	40.3	0	− 0.4	2.05	1.90	0.85	0.75	3	44.8	42	0.25	0.15	0.06	2	30	25
NR1044	42.3	0	− 0.4	2.05	1.90	0.85	0.75	4	46.8	44	0.25	0.15	0.06	2.5	32	−
NR1045	43.3	0	− 0.4	2.05	1.90	0.85	0.75	4	47.8	45	0.25	0.15	0.06	2.5	−	28
NR1047	45.3	0	− 0.4	2.05	1.90	0.85	0.75	4	49.8	47	0.25	0.15	0.06	2.5	35	30
NR1052	50.3	0	− 0.4	2.05	1.90	0.85	0.75	4	54.8	52	0.25	0.15	0.06	2.5	40	32
NR1055	53.3	0	− 0.4	2.05	1.90	0.85	0.75	4	57.8	55	0.25	0.15	0.06	2.5	−	35
NR1058	56.3	0	− 0.6	2.05	1.90	0.85	0.75	4	60.8	58	0.25	0.15	0.06	2.5	45	−
NR1062	60.2	0	− 0.6	2.05	1.90	0.85	0.75	4	64.8	62	0.25	0.15	0.06	2.5	−	40
NR1065	63.2	0	− 0.6	2.05	1.90	0.85	0.75	4	67.8	65	0.25	0.15	0.06	2.5	50	−
NR1068	66.2	0	− 0.6	2.05	1.90	0.85	0.75	5	70.8	68	0.25	0.15	0.06	3	−	45
NR1072	70.2	0	− 0.6	2.05	1.90	0.85	0.75	5	74.8	72	0.25	0.15	0.06	3	55	50
NR1078	75.7	0	− 0.6	3.25	3.10	1.12	1.02	5	82.7	78	0.4	0.3	0.06	3	60	−
NR1080	77.4	0	− 0.6	3.25	3.10	1.12	1.02	5	84.4	80	0.4	0.3	0.06	3	−	55
NR1085	82.4	0	− 0.6	3.25	3.10	1.12	1.02	5	89.4	85	0.4	0.3	0.06	3	65	60
NR1090	87.4	0	− 0.6	3.25	3.10	1.12	1.02	5	94.4	90	0.4	0.3	0.06	3	70	65
NR1095	92.4	0	− 0.6	3.25	3.10	1.12	1.02	5	99.4	95	0.4	0.3	0.06	3	75	−
NR1100	97.4	0	− 0.6	3.25	3.10	1.12	1.02	5	104.4	100	0.4	0.3	0.06	3	80	70
NR1105	101.9	0	− 0.8	4.04	3.89	1.12	1.02	5	110.7	105	0.4	0.3	0.06	3	−	75
NR1110	106.9	0	− 0.8	4.04	3.89	1.12	1.02	5	115.7	110	0.4	0.3	0.06	3	85	80
NR1115	111.9	0	− 0.8	4.04	3.89	1.12	1.02	5	120.7	115	0.4	0.3	0.06	3	90	−
NR1120	116.9	0	− 0.8	4.04	3.89	1.12	1.02	7	125.7	120	0.4	0.3	0.06	4	95	85
NR1125	121.8	0	− 0.8	4.04	3.89	1.12	1.02	7	130.7	125	0.4	0.3	0.06	4	100	90
NR1130	126.8	0	− 0.8	4.04	3.89	1.12	1.02	7	135.7	130	0.4	0.3	0.06	4	105	95
NR1140	136.8	0	− 1.0	4.04	3.89	1.7	1.6	7	145.7	140	0.6	0.5	0.06	4	110	100
NR1145	141.8	0	− 1.0	4.04	3.89	1.7	1.6	7	150.7	145	0.6	0.5	0.06	4	−	105
NR1150	146.8	0	− 1.2	4.04	3.89	1.7	1.6	7	155.7	150	0.6	0.5	0.06	4	120	110
NR1165	161	0	− 1.2	4.85	4.70	1.7	1.6	7	171.5	165	0.6	0.5	0.06	4	130	120
NR1175	171	0	− 1.2	4.85	4.70	1.7	1.6	10	181.5	175	0.6	0.5	0.06	6	140	−
NR1180	176	0	− 1.2	4.85	4.70	1.7	1.6	10	186.5	180	0.6	0.5	0.06	6	−	130
NR1190	186	0	− 1.4	4.85	4.70	1.7	1.6	10	196.5	190	0.6	0.5	0.06	6	150	140
NR1200	196	0	− 1.4	4.85	4.70	1.7	1.6	10	206.5	200	0.6	0.5	0.06	6	160	−

Groove

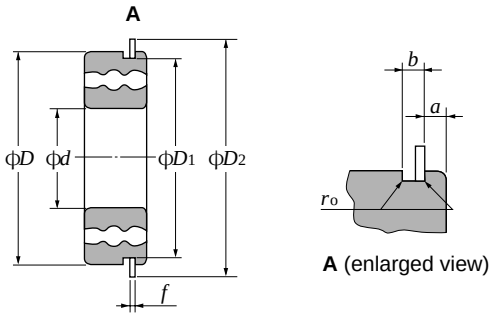

Dimension unit: mm

Nominal bearing outer diameter	Groove diameter		Dimension series				Groove width		Knuckle radius
			18		19				
			Groove position						
D	D_1		a				b		r_o
	max	min	max	min	max	min	max	min	max
22	20.8	**20.5**	–	–	1.05	0.90	1.05	0.8	0.2
24	22.8	**22.5**	–	–	1.05	0.90	1.05	0.8	0.2
28	26.7	**26.4**	–	–	1.30	1.15	1.20	0.95	0.25
30	28.7	**28.4**	–	–	1.30	1.15	1.20	0.95	0.25
32	30.7	**30.4**	1.30	1.15	–	–	1.20	0.95	0.25
34	32.7	**32.4**	1.30	1.15	–	–	1.20	0.95	0.25
37	35.7	**35.4**	1.30	1.15	1.70	1.55	1.20	0.95	0.25
39	37.7	**37.4**	–	–	1.70	1.55	1.20	0.95	0.25
40	38.7	**38.4**	1.30	1.15	–	–	1.20	0.95	0.25
42	40.7	**40**.4	1.30	1.15	1.70	1.55	1.20	0.95	0.25
44	42.7	**42**.4	1.30	1.15	–	–	1.20	0.95	0.25
45	43.7	**43**.4	–	–	1.70	1.55	1.20	0.95	0.25
47	45.7	**45**.4	1.30	1.15	1.70	1.55	1.20	0.95	0.25
52	50.7	**50**.4	1.30	1.15	1.70	1.55	1.20	0.95	0.25
55	53.7	**53**.4	–	–	1.70	1.55	1.20	0.95	0.25
58	56.7	**56.4**	1.30	1.15	–	–	1.20	0.95	0.25
62	60.7	**60.3**	–	–	1.70	1.55	1.20	0.95	0.25
65	63.7	**63.3**	1.30	1.15	–	–	1.20	0.95	0.25
68	66.7	**66.3**	–	–	1.70	1.55	1.20	0.95	0.25
72	70.7	**70.3**	1.70	1.55	1.70	1.55	1.20	0.95	0.25
78	76.2	**75.8**	1.70	1.55	–	–	1.6	1.3	0.4
80	77.9	**77.5**	–	–	2.1	1.9	1.6	1.3	0.4
85	82.9	**82.5**	1.70	1.55	2.1	1.9	1.6	1.3	0.4
90	87.9	**87.5**	1.70	1.55	2.1	1.9	1.6	1.3	0.4
95	92.9	**92.5**	1.70	1.55	–	–	1.6	1.3	0.4
100	97.9	**97.5**	1.70	1.55	2.5	2.3	1.6	1.3	0.4
105	102.6	**102.1**	–	–	2.5	2.3	1.6	1.3	0.4
110	107.6	**107.1**	2.1	1.9	2.5	2.3	1.6	1.3	0.4
115	112.6	**112.1**	2.1	1.9	–	–	1.6	1.3	0.4
120	117.6	**117.1**	2.1	1.9	3.3	3.1	1.6	1.3	0.4
125	122.6	**122.1**	2.1	1.9	3.3	3.1	1.6	1.3	0.4
130	127.6	**127.1**	2.1	1.9	3.3	3.1	1.6	1.3	0.4
140	137.6	**137.1**	**2.5**	2.3	3.3	3.1	2.2	1.9	0.6
145	142.6	**142.1**	–	–	3.3	3.1	2.2	1.9	0.6
150	147.6	**147.1**	2.5	2.3	3.3	3.1	2.2	1.9	0.6
165	161.8	**161.3**	3.3	3.1	3.7	3.5	2.2	1.9	0.6
175	171.8	**181.3**	3.3	3.1	–	–	2.2	1.9	0.6
180	176.8	**176.3**	–	–	3.7	3.5	2.2	1.9	0.6
190	186.8	**186.3**	3.3	3.1	3.7	3.5	2.2	1.9	0.6
200	196.8	**196.5**	3.3	3.1	–	–	2.2	1.9	0.6

Snap rings
for diameter series 0, 2, 3 and 4 bearings

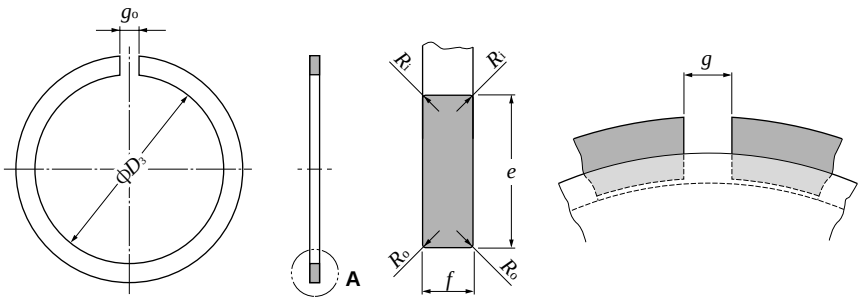

A (enlarged view)

Dimension unit: mm

Bearing No.	Dimensional tolerance of bore: D_3	tolerance of ΔD_3: Upper	Lower	e: max	min	f: max	min	snap ring fitted inside groove: g	snap ring outer diameter D_2: max	nominal bearing outer diameter D	Reference: R_i min	R_o min	thickness variation V_f max	g_o	applicable bearing dimension series 0: nominal bearing outer diameter d	2	3	4
NR 30	27.9	0	−0.4	3.25	3.10	1.12	1.02	3	34.7	30	0.4	0.3	0.06	2	–	10	9	8
NR 32	29.9	0	−0.4	3.25	3.10	1.12	1.02	3	36.7	32	0.4	0.3	0.06	2	15	12	–	9
NR 35	32.9	0	−0.4	3.25	3.10	1.12	1.02	3	39.7	35	0.4	0.3	0.06	2	17	15	10	–
NR 37	34.5	0	−0.4	3.25	3.10	1.12	1.02	3	41.3	37	0.4	0.3	0.06	2	–	–	12	10
NR 40	37.8	0	−0.4	3.25	3.10	1.12	1.02	3	44.6	40	0.4	0.3	0.06	2	–	17	–	–
NR 42	39.5	0	−0.5	3.25	3.10	1.12	1.02	3	46.3	42	0.4	0.3	0.06	2	20	–	15	12
NR 44	41.5	0	−0.5	3.25	3.10	1.12	1.02	3	48.3	44	0.4	0.3	0.06	2	22	–	–	–
NR 47	44.3	0	−0.5	4.04	3.89	1.12	1.02	4	52.7	47	0.4	0.3	0.06	2.5	25	20	17	–
NR 50	47.3	0	−0.5	4.04	3.89	1.12	1.02	4	55.7	50	0.4	0.3	0.06	2.5	–	22	–	–
NR 52	49.4	0	−0.5	4.04	3.89	1.12	1.02	4	57.9	52	0.4	0.3	0.06	2.5	28	25	20	15
NR 55	52.3	0	−0.5	4.04	3.89	1.12	1.02	4	60.7	55	0.4	0.3	0.06	2.5	30	–	–	–
NR 56	53.2	0	−0.6	4.04	3.89	1.12	1.02	4	61.7	56	0.4	0.3	0.06	2.5	–	–	22	–
NR 58	55.2	0	−0.6	4.04	3.89	1.12	1.02	4	63.7	58	0.4	0.3	0.06	2.5	32	28	–	–
NR 62	59.0	0	−0.6	4.04	3.89	1.7	1.6	4	67.7	62	0.6	0.5	0.06	2.5	35	30	25	17
NR 65	62.0	0	−0.6	4.04	3.89	1.7	1.6	4	70.7	65	0.6	0.5	0.06	2.5	–	32	–	–
NR 68	64.2	0	−0.6	4.85	4.70	1.7	1.6	5	74.6	68	0.6	0.5	0.06	3	40	–	28	–
NR 72	68.2	0	−0.6	4.85	4.70	1.7	1.6	5	78.6	72	0.6	0.5	0.06	3	–	35	30	20
NR 75	71.2	0	−0.6	4.85	4.70	1.7	1.6	5	81.6	75	0.6	0.5	0.06	3	45	–	32	–
NR 80	76.2	0	−0.6	4.85	4.70	1.7	1.6	5	86.6	80	0.6	0.5	0.06	3	50	40	35	25
NR 85	81.2	0	−0.6	4.85	4.70	1.7	1.6	5	91.6	85	0.6	0.5	0.06	3	–	45	–	–
NR 90	86.2	0	−0.6	4.85	4.70	2.46	2.36	5	96.5	90	0.6	0.5	0.06	3	55	50	40	30
NR 95	91.2	0	−0.6	4.85	4.70	2.46	2.36	5	101.6	95	0.6	0.5	0.06	3	60	–	–	–
NR100	96.2	0	−0.8	4.85	4.70	2.46	2.36	5	106.5	100	0.6	0.5	0.06	3	65	55	45	35
NR110	106.2	0	−0.8	4.85	4.70	2.46	2.36	5	116.6	110	0.6	0.5	0.06	3	70	60	50	40
NR115	111.2	0	−0.8	4.85	4.70	2.46	2.36	5	121.6	115	0.6	0.5	0.06	3	75	–	–	–
NR120	114.6	0	−0.8	7.21	7.06	2.82	2.72	7	129.7	120	0.6	0.5	0.06	4	–	65	55	45
NR125	119.6	0	−0.8	7.21	7.06	2.82	2.72	7	134.7	125	0.6	0.5	0.06	4	80	70	–	–
NR130	124.6	0	−0.8	7.21	7.06	2.82	2.72	7	139.7	130	0.6	0.5	0.06	4	85	75	60	50
NR140	134.6	0	−1.2	7.21	7.06	2.82	2.72	7	149.7	140	0.6	0.5	0.06	4	90	80	65	55
NR145	139.6	0	−1.2	7.21	7.06	2.82	2.72	7	154.7	145	0.6	0.5	0.06	4	95	–	–	–
NR150	144.5	0	−1.2	7.21	7.06	2.82	2.72	7	159.7	150	0.6	0.5	0.06	4	100	85	70	60
NR160	154.5	0	−1.2	7.21	7.06	2.82	2.72	7	169.7	160	0.6	0.5	0.06	4	105	90	75	65
NR170	162.9	0	−1.2	9.60	9.45	3.1	3.0	10	182.9	170	0.6	0.5	0.06	6	110	95	80	–
NR180	172.8	0	−1.2	9.60	9.45	3.1	3.0	10	192.9	180	0.6	0.5	0.06	6	120	100	85	70
NR190	182.8	0	−1.4	9.60	9.45	3.1	3.0	10	202.9	190	0.6	0.5	0.06	6	–	105	90	75
NR200	192.8	0	−1.4	9.60	9.45	3.1	3.0	10	212.9	200	0.6	0.5	0.06	6	130	110	95	80

Groove

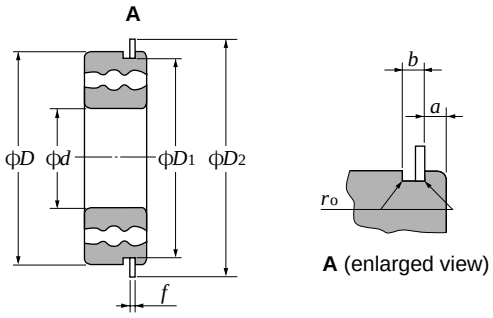

Dimension unit: mm

Nominal bearing outer diameter	Groove diameter		Dimension series				Groove width		Knuckle radius
			0		2, 3, 4				
			Groove position						
D	D_1		a				b		r_o
	max	min	max	min	max	min	max	min	max
30	28.17	27.91	–	–	2.06	1.90	1.65	1.35	0.4
32	30.15	29.90	2.06	1.90	2.06	1.90	1.65	1.35	0.4
35	33.17	32.92	2.06	1.90	2.06	1.90	1.65	1.35	0.4
37	34.77	34.52	–	–	2.06	1.90	1.65	1.35	0.4
40	38.10	37.85	–	–	2.06	1.90	1.65	1.35	0.4
42	39.75	39.50	2.06	1.90	2.06	1.90	1.65	1.35	0.4
44	41.75	41.50	2.06	1.90	–	–	1.65	1.35	0.4
47	44.60	44.35	2.06	1.90	2.46	2.31	1.65	1.35	0.4
50	47.60	47.35	–	–	2.46	2.31	1.65	1.35	0.4
52	49.73	49.48	2.06	1.90	2.46	2.31	1.65	1.35	0.4
55	52.60	52.35	2.08	1.88	–	–	1.65	1.35	0.4
56	53.60	53.35	–	–	2.46	2.31	1.65	1.35	0.4
58	55.60	55.35	2.08	1.88	2.46	2.31	1.65	1.35	0.4
62	59.61	59.11	2.08	1.88	3.28	3.07	2.2	1.9	0.6
65	62.60	62.10	–	–	3.28	3.07	2.2	1.9	0.6
68	64.82	64.31	2.49	2.29	3.28	3.07	2.2	1.9	0.6
72	68.81	68.30	–	–	3.28	3.07	2.2	1.9	0.6
75	71.83	71.32	2.49	2.29	3.28	3.07	2.2	1.9	0.6
80	76.81	76.30	2.49	2.29	3.28	3.07	2.2	1.9	0.6
85	81.81	81.31	–	–	3.28	3.07	2.2	1.9	0.6
90	86.79	86.28	2.87	2.67	3.28	3.07	3.0	2.7	0.6
95	91.82	91.31	2.87	2.67	–	–	3.0	2.7	0.6
100	96.80	96.29	2.87	2.67	3.28	3.07	3.0	2.7	0.6
110	106.81	106.30	2.87	2.67	3.28	3.07	3.0	2.7	0.6
115	111.81	111.30	2.87	2.67	–	–	3.0	2.7	0.6
120	115.21	114.71	–	–	4.06	3.86	3.4	3.1	0.6
125	120.22	119.71	2.87	2.67	4.06	3.86	3.4	3.1	0.6
130	125.22	124.71	2.87	2.67	4.06	3.86	3.4	3.1	0.6
140	135.23	134.72	3.71	3.45	4.90	4.65	3.4	3.1	0.6
145	140.23	139.73	3.71	3.45	–	–	3.4	3.1	0.6
150	145.24	144.73	3.71	3.45	4.90	4.65	3.4	3.1	0.6
160	155.22	154.71	3.71	3.45	4.90	4.65	3.4	3.1	0.6
170	163.65	163.14	3.71	3.45	5.69	5.44	3.8	3.5	0.6
180	173.66	173.15	3.71	3.45	5.69	5.44	3.8	3.5	0.6
190	183.64	183.13	–	–	5.69	5.44	3.8	3.5	0.6
200	193.65	193.14	5.69	5.44	5.69	5.44	3.8	3.5	0.6

Catalog List and Appendix Table Contents

Catalog list ····· D- 2

Appendix table 1: Boundary dimensions of radial bearings (Tapered roller bearings not included) ····· D- 4

Appendix table 2: Comparison of SI, CGS and gravity units ··· D- 6

Appendix table 3: Conversion to SI unit ····· D- 7

Appendix table 4: Tenth power multiples of SI unit ····· D- 7

Appendix table 5: Dimensional tolerance for shafts ····· D- 8

Appendix table 6: Dimensional tolerance for housing bore ····· D-10

Appendix table 7: Basic tolerance ····· D-12

Appendix table 8: Viscosity conversion table ····· D-13

Appendix table 9: Kgf to N conversion table ····· D-14

Appendix table 10: US customary to metric conversion table ··· D-15

Appendix table 11: Hardness conversion table (reference) ····· D-16

Appendix table 12: Greek alphabet list ····· D-17

Catalog List & Appendix Table

CATALOG TITLES	CATALOG No.
●BALL AND ROLLER BEARINGS	
Ball and Roller Bearings	2202/C/E/I/P/S
Large Bearings	2250/E/P
Miniature and Extra Small Ball Bearings	3013/E
Miniature Molded Rubber Bearings	3014/E
Ball Bearings Shield and Seal Types	3015/E
Care and Maintenance of Bearings	3017/E/S/P
HL Bearings	3020/E
Bearings with Solid Grease	3022/E/S/P
Large Size, Long Operating Life Bearing-EA type	3024/E/P
Tapered Roller Bearings ECO-Top	3026/E/S/C
Self-Aligning Spherical Roller Bearings LH Series	3027/E/S/C
Bearings for Clean Environment	3028/E
Insulated Bearings-Resin Coated Type	3204/E
Type E Spherical Roller Bearings	3701/E
Sealed Self-Aligning Roller Bearings-WA Type	3702/E/S
Spherical Roller Bearings-UA Type	3710/E
HUB BEARINGS	4601/E
Aerospace Bearings	8102/E
Precision Rolling Bearings for Machine Tools	8401/E
Super High-speed Precision Bearings for Main Spindles of Machine Tools	8403/E
●NEEDLE ROLLER BEARINGS	
Needle Roller Bearings	2300/E/I/P/S
Miniature Cam Followers	3601/E
●CONSTANT VELOCITY JOINTS	
Constant Velocity Joints for Automobiles	5601/JE
TRI-Ball Joint / Constant Velocity Joints	5602/E
Constant Velocity Joints for Industrial Machines	5603/E
●BEARING UNITS	
Bearing Units	2400/E/I/S
Bearing Units with Ductile Cast Iron Housing	3901/E
Bearing Units Steel Series	3902/E
Bearing Units Stainless Series	3903/E
Bearing Units Plastic Housing Series	3904/E
Triple-Sealed Bearings for Bearing Units	3905/E

CATALOG TITLES	CATALOG No.
●PLUMMER BLOCKS	
Plummer Blocks	2500E/S
●PRECISION BALL SCREWS	
Precision Ball Screws	6000/E
Rolled Ball Screws	6206/E
●PARTS FEEDER	
Parts Feeder	7018/E
NTN Parts Feeder with Standard Attachments (for Bolts or Washer)	7016/E
●CLUTCHES	
One-way Clutches (Overrunning Clutches)	6402/E
●PLAIN BEARINGS	
"BEAREE" NTN Engineering Plastics	5100/E
Miniature Plastic Sliding Screws	5112/E
NTN "BEARPHITE" Oil Impregnated Sintered Bearings	5202/E
Spherical Plain Bearings	5301/E
●HANDBOOK	
Bearing Units Handbook	9011/E/S
Rolling Bearings Handbook	9012/E
Needle Roller Bearings Handbook	9013/E
●GUIDE BOOK	
Parts Feeder Guide Book	7019/E
Automotive Products Guide Book	8021/E/D/F/C
New Products Guide	9208/E/C
Food Machinery Component Guide	9209/E
Product Catalog for Paper Manufacturing Machinery	9210/E
Steel Manufacturing Machinery Product Guide Book	9211/E
●ELECTRONIC CATALOG	
NTN Electronic Catalog (CD-ROM for Windows)	7903/E
NTN Autoparts Catalog (CD-ROM for Windows)	7905/E
Reference Kit Program -Bearing Interchange- (CD-ROM for Windows)	7907/E
●OTHERS	
Bearing Handling	9103/E/P/S

C:Chinese E:English F:French D:Germany I:Italian
K:Korean S:Spanish T:Thai TC: Taipei Chinese

Note : The above are basic numbers. Renewal of the suffix by a revision.

Appendix table 1: Boundary dimensions of radial bearings (Tapered roller bearings not included)-1

Single row radial ball bearings		67						68 78										69 79									160	60 70								
Double row radial ball bearings																																			
Cylindrical roller bearings									N28	N38	NN48							N19	N29	NN39	NN49						N10	N20	NN30	NN40						
Needle roller bearings											NA48										NA49	NA59	NA69													
Spherical roller bearings																				239	249								230	240						
Nominal bearing bore diameter d		Diameter series 7						Diameter series 8										Diameter series 9										Diameter series 0								
		Nominal outside diameter of bearing	Dimension series					Nominal outside diameter of bearing	Dimension series									Nominal outside diameter of bearing	Dimension series									Nominal outside diameter of bearing	Dimension series							
Number	Dimension	D	17	27	37	17~37		D	08	18	28	38	48	58	68	08	18~68	D	09	19	29	39	49	59	69	09	19~39	49~69		D	00	10	20	30	40	50	60	00	10~60
			Nominal width B			Chamfer dimension r_s min			Nominal width B							Chamfer dimension r_s min			Nominal width B							Chamfer dimension r_s min					Nominal width B							Chamfer dimension r_s min	
—	0.6	2	0.8	—	—	0.05	2.5	—	1	—	1.4	—	—	—	—	0.05		—	—	—	—	—	—	—	—	—	—	—	—	—	—	—	—	—	—	—	—	—
1	1	2.5	1	—	—	0.05	3	—	1	—	1.5	—	—	—	—	0.05		4	—	1.6	—	2.3	—	—	—	—	0.1	—		—	—	—	—	—	—	—	—	—	—	—
—	1.5	3	1	—	1.8	0.05	4	—	1.2	—	2	—	—	—	—	0.05		5	—	2	—	2.6	—	—	—	—	0.15	—		6	—	2.5	—	3	—	—	—	—	0.15
2	2	4	1.2	—	2	0.05	5	—	1.5	—	2.3	—	—	—	—	0.08		6	—	2.3	—	3	—	—	—	—	0.15	—		7	—	2.8	—	3.5	—	—	—	—	0.15
—	2.5	5	1.5	—	2.3	0.08	6	—	1.8	—	2.6	—	—	—	—	0.08		7	—	2.5	—	3.5	—	—	—	—	0.15	—		8	—	2.8	—	4	—	—	—	—	0.15
3	3	6	2	2.5	3	0.08	7	—	2	—	3	—	—	—	—	0.1		8	—	3	—	4	—	—	—	—	0.15	—		7	—	3	—	5	—	—	—	—	0.15
4	4	7	2	2.5	3	0.08	9	—	2.5	3.5	4	—	—	—	—	0.1		11	—	4	—	5	—	—	—	—	0.15	—		12	—	4	—	6	—	—	—	—	0.2
5	5	8	2	2.5	3	0.08	11	—	3	4	5	—	—	—	—	0.15		13	—	4	—	6	10	—	—	—	0.2	0.15		14	—	5	—	7	—	—	—	—	0.2
6	6	10	2.5	3	3.5	0.1	13	—	3.5	5	6	—	—	—	—	0.15		15	—	5	—	7	10	—	—	—	0.2	0.15		17	—	6	—	9	—	—	—	—	0.3
7	7	11	2.5	3	3.5	0.1	14	—	3.5	5	6	—	—	—	—	0.15		17	—	5	—	7	10	—	—	—	0.3	0.15		19	—	6	8	10	—	—	—	—	0.3
8	8	12	2.5	—	3.5	0.1	16	—	4	5	6	8	—	—	—	0.2		19	—	6	—	9	11	—	—	—	0.3	0.2		22	—	7	9	11	14	19	25	—	0.3
9	9	14	3	—	4.5	0.1	17	—	4	5	6	8	—	—	—	0.2		20	—	6	—	9	11	—	—	—	0.3	0.3		24	—	7	10	12	15	20	27	—	0.3
00	10	15	3	—	4.5	0.1	19	—	5	6	7	9	—	—	—	0.3		22	—	6	8	10	13	16	22	—	0.3	0.3		26	—	8	10	12	16	21	29	—	0.3
01	12	18	4	—	5	0.2	21	—	5	6	7	9	—	—	—	0.3		24	—	6	8	10	13	16	22	—	0.3	0.3		28	7	8	10	12	16	21	29	0.3	0.3
02	15	21	4	—	5	0.2	24	—	5	6	7	9	—	—	—	0.3		28	—	7	8.5	10	13	18	23	—	0.3	0.3		32	8	9	11	13	17	23	30	0.3	0.3
03	17	23	4	—	5	0.2	26	—	5	6	7	9	—	—	—	0.3		30	—	7	8.5	10	13	18	23	—	0.3	0.3		35	8	10	12	14	18	24	32	0.3	0.3
04	20	27	4	—	5	0.2	32	4	7	8	10	12	16	22	0.3	0.3		37	7	9	11	13	17	23	30	0.3	0.3	0.3		42	8	12	14	16	22	30	40	0.3	0.6
/22	22	—	—	—	—	—	34	4	7	—	10	—	16	22	0.3	0.3		39	7	9	11	13	17	23	30	0.3	0.3	0.3		44	8	12	14	16	22	30	40	0.3	0.6
05	25	32	4	—	5	0.2	37	4	7	8	10	12	16	22	0.3	0.3		42	7	9	11	13	17	23	30	0.3	0.3	0.3		47	8	12	14	16	22	30	40	0.3	0.6
/28	28	—	—	—	—	—	40	4	7	—	10	—	16	22	0.3	0.3		45	7	9	11	13	17	23	30	0.3	0.3	0.3		52	8	12	15	18	24	32	43	0.3	0.6
06	30	37	4	—	5	0.2	42	4	7	8	10	12	16	22	0.3	0.3		47	7	9	11	13	17	23	30	0.3	0.3	0.3		55	9	13	16	19	25	34	45	0.3	1
/32	32	—	—	—	—	—	44	4	7	—	10	—	16	22	0.3	0.3		52	7	10	13	15	20	27	36	0.3	0.6	0.6		58	9	13	16	20	26	35	47	0.3	1
07	35	44	5	—	—	0.3	47	4	7	8	10	12	16	22	0.3	0.3		55	7	10	13	15	20	27	36	0.3	0.6	0.6		62	9	14	17	20	27	36	48	0.3	1
08	40	—	—	—	—	—	52	4	7	8	10	12	16	22	0.3	0.3		62	8	12	14	16	22	30	40	0.3	0.6	0.6		68	9	15	18	21	28	38	50	0.3	1
09	45	—	—	—	—	—	58	4	7	8	10	13	18	23	0.3	0.3		68	8	12	14	16	22	30	40	0.3	0.6	0.6		75	10	16	19	23	30	40	54	0.3	1
10	50	—	—	—	—	—	65	5	7	10	12	15	20	27	0.3	0.3		72	8	12	14	16	22	30	40	0.3	0.6	0.6		80	10	16	19	23	30	40	54	0.6	1
11	55	—	—	—	—	—	72	7	9	11	13	17	23	30	0.3	0.3		80	9	13	16	19	25	34	45	0.3	1	1		90	11	18	22	26	35	46	63	0.6	1.1
12	60	—	—	—	—	—	78	7	10	12	14	18	24	32	0.3	0.3		85	9	13	16	19	25	34	45	0.3	1	1		95	11	18	22	26	35	46	63	0.6	1.1
13	65	—	—	—	—	—	85	7	10	13	15	20	27	36	0.3	0.6		90	9	13	16	19	25	34	45	0.6	1	1		100	11	18	22	26	35	46	63	0.6	1.1
14	70	—	—	—	—	—	90	8	10	13	15	20	27	36	0.3	0.6		100	10	16	19	23	30	40	54	0.6	1	1		110	13	20	24	30	40	54	71	0.6	1.1
15	75	—	—	—	—	—	95	8	10	13	15	20	27	36	0.3	0.6		105	10	16	19	23	30	40	54	0.6	1	1		115	13	20	24	30	40	54	71	0.6	1.1
16	80	—	—	—	—	—	100	8	10	13	15	20	27	36	0.3	0.6		110	10	16	19	23	30	40	54	0.6	1	1		125	14	22	27	34	45	60	80	0.6	1.1
17	85	—	—	—	—	—	110	9	13	16	19	25	34	45	0.3	1		120	11	18	22	26	35	46	63	0.6	1.1	1.1		130	14	22	27	34	45	60	80	0.6	1.1
18	90	—	—	—	—	—	115	9	13	16	19	25	34	45	0.3	1		125	11	18	22	26	35	46	63	0.6	1.1	1.1		140	16	24	30	37	50	67	90	1	1.5
19	95	—	—	—	—	—	120	9	13	16	19	25	34	45	0.3	1		130	11	18	22	26	35	46	63	0.6	1.1	1.1		145	16	24	30	37	50	67	90	1	1.5
20	100	—	—	—	—	—	125	9	13	16	19	25	34	45	0.3	1		140	13	20	24	30	40	54	71	0.6	1.1	1.1		150	16	24	30	37	50	67	100	1	1.5
21	105	—	—	—	—	—	130	9	13	16	19	25	34	45	0.3	1		145	13	20	24	30	40	54	71	0.6	1.1	1.1		160	18	26	33	41	56	75	109	1	2
22	110	—	—	—	—	—	140	10	16	19	23	30	40	54	0.6	1		150	13	20	24	30	40	54	71	0.6	1.1	1.1		170	19	28	36	45	60	80	109	1	2
24	120	—	—	—	—	—	150	10	16	19	23	30	40	54	0.6	1		165	14	22	27	34	45	60	80	0.6	1.1	1.1		180	19	28	36	46	60	80	109	1	2
26	130	—	—	—	—	—	165	11	18	22	26	35	46	63	0.6	1.1		180	16	24	30	37	50	67	90	1	1.5	1.5		200	22	33	42	52	69	95	125	1.1	2
28	140	—	—	—	—	—	175	11	18	22	26	35	46	63	0.6	1.1		190	16	24	30	37	50	67	90	1	1.5	1.5		210	22	33	42	53	69	65	125	1.1	2
30	150	—	—	—	—	—	190	13	20	24	30	40	54	71	0.6	1.1		210	19	28	36	45	60	80	109	1	2	2		225	24	35	45	56	75	100	136	1.1	2.1
32	160	—	—	—	—	—	200	13	20	24	30	40	54	71	0.6	1.1		220	19	28	36	45	60	80	109	1	2	2		240	25	38	48	60	80	109	145	1.5	2.1
34	170	—	—	—	—	—	215	14	22	27	34	45	60	80	0.6	1.1		230	19	28	36	45	60	80	109	1	2	2		260	28	42	54	67	90	122	160	1.5	2.1
36	180	—	—	—	—	—	225	14	22	27	34	45	60	80	0.6	1.1		250	22	33	42	52	69	95	125	1.1	2	2		280	31	46	60	74	100	136	180	2	2.1
38	190	—	—	—	—	—	240	16	24	30	37	50	67	90	1	1.5		260	22	33	42	52	69	95	125	1.1	2	2		290	31	46	60	75	100	136	180	2	2.1
40	200	—	—	—	—	—	250	16	24	30	37	50	67	90	1	1.5		280	25	38	48	60	80	109	145	1.5	2.1	2.1		310	34	51	66	82	109	150	200	2	2.1
44	220	—	—	—	—	—	270	16	24	30	37	50	67	90	1	1.5		300	25	38	48	60	80	109	145	1.5	2.1	2.1		340	37	56	72	90	118	160	218	2.1	3
48	240	—	—	—	—	—	300	19	28	36	45	60	80	100	1	2		320	25	38	48	60	80	109	145	1.5	2.1	2.1		360	37	56	72	92	118	160	218	2.1	3
52	260	—	—	—	—	—	320	19	28	36	45	60	80	100	1	2		360	31	46	60	75	100	136	180	2	2.1	2.1		400	44	65	82	104	140	190	250	3	4
56	280	—	—	—	—	—	350	22	33	42	52	69	95	125	1.1	2		380	31	46	60	75	100	136	180	2	2.1	2.1		420	44	65	82	106	140	190	250	3	4
60	300	—	—	—	—	—	380	25	38	48	60	80	109	145	1.5	2.1		420	37	56	72	90	118	160	218	2.1	3	3		460	50	74	95	118	160	218	290	4	4
64	320	—	—	—	—	—	400	25	38	48	60	80	109	145	1.5	2.1		440	37	56	72	90	118	160	218	2.1	3	3		480	50	74	95	121	160	218	290	4	4
68	340	—	—	—	—	—	420	25	38	48	60	80	109	145	1.5	2.1		460	37	56	72	90	118	160	218	2.1	3	3		520	57	82	106	133	180	243	325	4	5
72	360	—	—	—	—	—	440	25	38	48	60	80	109	145	1.5	2.1		480	37	56	72	90	118	160	218	2.1	3	3		540	57	82	106	134	180	243	325	4	5
76	380	—	—	—	—	—	480	31	46	60	75	100	136	180	2	2.1		520	44	65	82	106	140	190	250	3	4	4		560	57	82	106	135	180	243	325	4	5
80	400	—	—	—	—	—	500	31	46	60	75	100	136	180	2	2.1		540	44	65	82	106	140	190	250	3	4	4		600	63	90	118	148	200	272	355	5	5
84	420	—	—	—	—	—	520	31	46	60	75	100	136	180	2	2.1		560	44	65	82	106	140	190	250	3	4	4		620	63	90	118	150	200	272	355	5	5
88	440	—	—	—	—	—	540	31	46	60	75	100	136	180	2	2.1		600	50	74	95	118	160	218	290	4	4	4		650	67	94	122	157	212	280	375	5	6
92	460	—	—	—	—	—	580	37	56	72	90	118	160	218	2.1	3		620	50	74	95	118	160	218	290	4	4	4		680	71	100	128	163	218	300	400	5	6
96	480	—	—	—	—	—	600	37	56	72	90	118	160	218	2.1	3		650	54	78	100	128	170	230	308	4	5	5		700	71	100	128	165	218	300	400	5	6
/500	500	—	—	—	—	—	620	37	56	72	90	118	160	218	2.1	3		670	54	78	100	128	170	230	308	4	5	5		720	71	100	128	167	218	300	400	5	6
/530	530	—	—	—	—	—	650	37	56	72	90	118	160	218	2.1	3		710	57	82	106	136	180	243	325	4	5	5		780	80	112	145	185	250	335	450	6	6
/560	560	—	—	—	—	—	680	37	56	72	90	118	160	218	2.1	3		750	60	85	112	140	190	258	345	5	5	5		820	82	115	150	195	258	355	462	6	6
/600	600	—	—	—	—	—	730	42	60	78	98	128	175	236	3	3		800	63	90	118	150	200	272	355	5	5	5		870	85	118	155	200	272	365	488	6	6
/630	630	—	—	—	—	—	780	48	69	88	112	150	200	272	3	4		850	71	100	128	165	218	300	400	5	6	6		920	92	128	170	212	290	388	515	6	7.5
/670	670	—	—	—	—	—	820	48	69	88	112	150	200	272	3	4		900	73	103	136	170	230	308	412	5	6	6		980	100	136	180	230	308	425	560	6	7.5
/710	710	—	—	—	—	—	870	50	74	95	118	160	218	290	4	4		950	78	106	140	180	243	325	438	5	6	6		1030	103	140	185	236	315	438	580	6	7.5
/750	750	—	—	—	—	—	920	54	78	100	128	170	230	308	4	5		1000	80	112	145	185	250	335	450	6	6	6		1090	109	150	195	250	335	462	615	7.5	7.5
/800	800	—	—	—	—	—	980	57	82	106	136	180	243	325	4	5		1060	82	115	150	195	258	355	462	6	6	6		1150	112	155	200	258	345	475	630	7.5	7.5
/850	850	—	—	—	—	—	1030	57	82	106	136	180	243	325	4	5		1120	85	118	155	200	272	365	488	6	6	6		1220	118	165	212	272	365	500	670	7.5	7.5
/900	900	—	—	—	—	—	1090	60	85	112	140	190	258	345	5	5		1180	88	122	165	206	280	375	500	6	6	6		1280	122	170	218	280	375	515	690	7.5	7.5
/950	950	—	—	—	—	—	1150	63	63	118	150	200	272	355	5	5		1250	95	132	175	224	300	400	545	6	7.5	7.5		1300	132	180	236	300	412	560	730	7.5	7.5
/1000	1000	—	—	—	—	—	1220	71	90	128	165	218	300	400	5	6		1320	103	140	185	236	315	438	580	6	7.5	7.5		1420	136	185	243	308	412	560	750	7.5	7.5
/1060	1060	—	—	—	—	—	1280	71	100	128	165	218	300	400	5	6		1400	109	150	195	250	335	462	615	7.5	7.5	7.5		1500	140	195	250	325	438	600	800	9.5	9.5
/1120	1120	—	—	—	—	—	1360	78	106	140	180	243	325	438	5	6		1460	109	150	195	250	335	462	615	7.5	7.5	7.5		1580	145	200	265	345	462	615	825	9.5	9.5
/1180	1180	—	—	—	—	—	1420	78	106	140	180	243	325	438	5	6		1540	115	160	206	272	355	488	650	7.5	7.5	7.5		1660	155	212	272	355	475	650	875	9.5	9.5
/1250	1250	—	—	—	—	—	1500	80	112	145	185	250	335	450	6	6		1630	122	170	218	280	375	515	690	7.5	7.5	7.5		1750	—	218	290	375	500	—	—	—	9.5
/1320	1320	—	—	—	—	—	1600	88	122	165	206	280	375	500	6	6		1720	128	175	230	300	400	545	710	7.5	7.5	7.5		1850	—	230	300	400	530	—	—	—	12
/1400	1400	—	—	—	—	—	1700	95	132	175	224	300	400	545	6	7.5		1820	—	185	243	315	425	—	—	—	9.5	9.5		1950	—	243	315	412	545	—	—	—	12
/1500	1500	—	—	—	—	—	1820	—	140	185	243	315	—	—	—	7.5		1950	—	195	258	335	450	—	—	—	9.5	9.5		2120	—	272	355	462	615	—	—	—	12
/1600	1600	—	—	—	—	—	1950	—	155	200	265	345	—	—	—	7.5		2060	—	200	265	345	462	—	—	—	9.5	9.5		2240	—	280	365	475	630	—	—	—	12
/1700	1700	—	—	—	—	—	2060	—	160	206	272	355	—	—	—	7.5		2180	—	212	280	355	475	—	—	—	9.5	9.5		2360	—	290	375	500	650	—	—	—	15
/1800	1800	—	—	—	—	—	2180	—	165	218	290	375	—	—	—	9.5		2300	—	218	290	375	500	—	—	—	12	12		2500	—	308	400	530	690	—	—	—	15
/1900	1900	—	—	—	—	—	2300	—	175	230	300	400	—	—	—	9.5		2430	—	230	308	400	530	—	—	—	12	12		—	—	—	—	—	—	—	—	—	—
/2000	2000	—	—	—	—	—	2430	—	190	250	325	425	—	—	—	9.5		—	—	—	—	—	—	—	—	—	—	—		—	—	—	—	—	—	—	—	—

Appendix table 1: Boundary dimensions of radial bearings (Tapered roller bearings not included)-2

Single row radial ball bearings											62 72			1,22	1,32						63 73		623	633				64 74		
Double row radial ball bearings											12			42 22	52 32						13		43 23	53 33						
Cylindrical roller bearings					NN31						N2			N22	N32						N3		N23	N33				N4		
Needle roller bearings																														
Spherical roller bearings					231	241								222	232						213		223							
Nominal bearing bore diameter *d*	Diameter series 1								Diameter series 2										Diameter series 3									Diameter series 4			
	Nominal outside diameter of bearing *D*	Dimension series							Nominal outside diameter of bearing *D*	Dimension series									Nominal outside diameter of bearing *D*	Dimension series							Nominal outside diameter of bearing *D*	Dimension series		
Number	Dimension	01	11	21	31	41	01	11~41		82	02	12	22	32	42	82	02~42		83	03	13	23	33	83	03~33		04	24	
		Nominal width *B*						Chamfer dimension *r* s min		Nominal width *B*						Chamfer dimension *r* s min			Nominal width *B*					Chamfer dimension *r* s min			Nominal width *B*		Chamfer dimension *r* s min
—	—	—	—	—	—	—	—	—	—	—	—	—	—	—	—	—	—	—	—	—	—	—	—	—	—	—	—	—	—
1	—	—	—	—	—	—	—	—	—	—	—	—	—	—	—	—	—	—	—	—	—	—	—	—	—	—	—	—	—
—	—	—	—	—	—	—	—	—	—	—	—	—	—	—	—	—	—	—	—	—	—	—	—	—	—	—	—	—	—
2	—	—	—	—	—	—	—	—	—	—	—	—	—	—	—	—	—	—	—	—	—	—	—	—	—	—	—	—	—
—	—	—	—	—	—	—	—	—	—	—	—	—	—	—	—	—	—	—	—	—	—	—	—	—	—	—	—	—	—
3	3	—	—	—	—	—	—	—	10	2.5	4	—	—	5	—	0.1	0.15	13	—	5	—	—	7	—	0.2	—	—	—	—
4	4	—	—	—	—	—	—	—	13	3	5	—	—	7	—	0.15	0.2	16	—	5	—	—	9	—	0.3	—	—	—	—
5	5	—	—	—	—	—	—	—	16	3.5	5	—	—	8	—	0.15	0.3	19	—	6	—	—	10	—	0.3	—	—	—	—
6	6	—	—	—	—	—	—	—	19	4	6	—	—	10	—	0.2	0.3	22	—	7	—	11	13	—	0.3	—	—	—	—
7	7	—	—	—	—	—	—	—	22	5	7	—	—	11	—	0.3	0.3	26	—	9	—	13	15	—	0.3	—	—	—	—
8	8	—	—	—	—	—	—	—	24	5	8	—	—	12	—	0.3	0.3	28	—	9	—	13	15	—	0.3	30	10	14	0.6
9	9	—	—	—	—	—	—	—	26	6	8	—	—	13	—	0.3	0.3	30	—	10	—	14	16	—	0.6	32	11	15	0.6
00	10	—	—	—	—	—	—	—	30	7	9	—	14	14.3	—	0.3	0.6	35	9	11	—	17	19	0.3	0.6	37	12	16	0.6
01	12	—	—	—	—	—	—	—	32	7	10	—	14	15.9	—	0.3	0.6	37	9	12	—	17	19	0.3	1	42	13	19	1
02	15	—	—	—	—	—	—	—	35	8	11	—	14	15.9	20	0.3	0.6	42	9	13	—	17	19	0.3	1	52	15	24	1.1
03	17	—	—	—	—	—	—	—	40	8	12	—	16	17.5	22	0.3	0.6	47	10	14	—	19	22.2	0.6	1	62	17	29	1.1
04	20	—	—	—	—	—	—	—	47	9	14	—	18	20.6	27	0.3	1	52	10	15	—	21	22.2	0.6	1.1	72	19	33	1.1
/22	22	—	—	—	—	—	—	—	50	9	14	—	18	20.6	27	0.3	1	56	11	16	—	21	25	0.6	1.1	—	—	—	—
05	25	—	—	—	—	—	—	—	52	10	15	—	18	20.6	27	0.3	1	62	12	17	—	24	25.4	0.6	1.1	80	21	36	1.5
/28	28	—	—	—	—	—	—	—	58	10	16	—	19	23	30	0.6	1	68	13	18	—	24	30	0.6	1.1	—	—	—	—
06	30	—	—	—	—	—	—	—	62	10	16	—	20	23.8	32	0.6	1	72	13	19	—	27	30.2	0.6	1.1	90	23	40	1.5
/32	32	—	—	—	—	—	—	—	65	11	17	—	21	25	33	0.6	1	75	14	20	—	28	32	0.6	1.1	—	—	—	—
07	35	—	—	—	—	—	—	—	72	12	17	—	23	27	37	0.6	1.1	80	14	21	—	31	34.9	0.6	1.5	100	25	43	1.5
08	40	—	—	—	—	—	—	—	80	13	18	—	23	30.2	40	0.6	1.1	90	16	23	—	33	36.5	1	1.5	110	27	46	2
09	45	—	—	—	—	—	—	—	85	13	19	—	23	30.2	40	0.6	1.1	100	17	25	—	36	39.7	1	1.5	120	29	50	2
10	50	—	—	—	—	—	—	—	90	13	20	—	23	30.2	40	0.6	1.1	110	19	27	—	40	44.4	1	2	130	31	53	2.1
11	55	—	—	—	—	—	—	—	100	14	21	—	25	33.3	45	1	1.5	120	21	29	—	43	49.2	1.1	2	140	33	57	2.1
12	60	—	—	—	—	—	—	—	110	16	22	—	28	36.5	50	1	1.5	130	22	31	—	46	54	1.1	2.1	150	35	60	2.1
13	65	—	—	—	—	—	—	—	125	18	23	—	31	38.1	56	1	1.5	140	24	33	—	48	58.7	1.1	2.1	160	37	64	2.1
14	70	—	—	—	—	—	—	—	125	18	24	—	31	39.7	56	1	1.5	150	25	35	—	51	63.5	1.5	2.1	180	42	74	3
15	75	—	—	—	—	—	—	—	130	18	25	—	31	41.3	56	1	1.5	160	27	37	—	55	68.3	1.5	2.1	190	45	77	3
16	80	—	—	—	—	—	—	—	140	19	26	—	33	44.4	60	1	2	170	28	39	—	58	68.3	1.5	2.1	200	48	80	3
17	85	—	—	—	—	—	—	—	150	21	28	—	36	49.2	65	1.1	2	180	30	41	—	60	73	2	3	210	52	86	4
18	90	150	—	—	—	60	—	2	160	22	30	—	40	52.4	69	1.1	2	190	30	43	—	64	73	2	3	225	54	90	4
19	95	160	—	—	—	65	—	2	170	24	32	—	43	55.6	75	1.1	2.1	200	33	45	—	67	77.8	2	3	240	55	95	4
20	100	165	21	30	39	52	65	1.1	2	180	25	34	—	46	60.3	80	1.5	2.1	215	36	47	51	73	82.6	2.1	3	250	58	98	4
21	105	175	22	33	42	56	69	1.1	2	190	27	36	—	50	65.1	85	1.5	2.1	225	37	49	53	77	87.3	2.1	3	260	60	100	4
22	110	180	22	33	42	56	69	1.1	2	200	28	38	—	53	69.8	90	1.5	2.1	240	42	50	57	80	92.1	3	3	280	65	108	4
24	120	200	25	38	48	62	80	1.5	2	215	—	40	42	58	76	95	—	2.1	260	44	55	62	86	106	3	3	310	72	118	5
26	130	210	25	38	48	64	80	1.5	2	230	—	40	46	64	80	100	—	3	280	48	58	66	93	112	3	4	340	78	128	5
28	140	225	27	40	50	68	85	1.5	2.1	250	—	42	50	68	88	109	—	3	300	50	62	70	102	118	4	4	360	82	132	5
30	150	250	31	46	60	80	100	2	2.1	270	—	45	54	73	96	118	—	3	320	—	65	75	108	128	—	4	380	85	138	5
32	160	270	34	51	66	86	109	2	2.1	290	—	48	58	80	104	128	—	3	340	—	68	79	114	136	—	4	400	88	142	5
34	170	280	34	51	66	88	109	2	2.1	310	—	52	62	86	110	140	—	4	360	—	72	84	120	140	—	4	420	92	145	5
36	180	300	37	56	72	96	118	2.1	3	320	—	52	62	86	112	140	—	4	380	—	75	88	126	150	—	4	440	95	150	6
38	190	320	42	60	78	104	128	3	3	340	—	55	65	92	120	150	—	4	400	—	78	92	132	155	—	5	460	98	155	6
40	200	340	44	65	82	112	140	3	3	360	—	58	70	98	128	160	—	4	420	—	80	97	138	165	—	5	480	102	160	6
44	220	370	48	69	88	120	150	3	4	400	—	65	78	108	144	180	—	4	460	—	88	106	145	180	—	5	540	115	180	6
48	240	400	50	74	95	128	160	4	4	440	—	72	85	120	160	200	—	4	500	—	95	114	155	195	—	5	580	122	190	6
52	260	440	57	82	106	144	180	4	4	480	—	80	90	130	174	218	—	5	540	—	102	123	165	206	—	6	620	132	206	7.5
56	280	460	57	82	106	146	180	4	5	500	—	80	90	130	176	218	—	5	580	—	108	132	175	224	—	6	670	140	224	7.5
60	300	500	63	90	118	160	200	5	5	540	—	85	98	140	192	243	—	5	620	—	109	140	185	236	—	7.5	710	150	236	7.5
64	320	540	71	100	128	176	218	5	5	580	—	92	105	150	208	258	—	5	670	—	112	155	200	258	—	7.5	750	155	250	9.5
68	340	580	78	106	140	190	243	5	5	620	—	92	118	165	224	280	—	6	710	—	118	165	212	272	—	7.5	800	164	265	9.5
72	360	600	78	106	140	192	243	5	5	650	—	95	122	170	232	290	—	6	750	—	125	170	224	290	—	7.5	850	180	280	9.5
76	380	620	78	106	140	194	243	5	5	680	—	95	132	175	240	300	—	6	780	—	128	175	230	300	—	7.5	900	190	300	9.5
80	400	650	80	112	145	200	250	6	6	720	—	103	140	185	256	315	—	6	820	—	136	185	243	308	—	7.5	950	200	315	12
84	420	700	88	122	165	224	280	6	6	760	—	109	150	195	272	335	—	7.5	850	—	136	190	250	315	—	9.5	980	206	325	12
88	440	720	88	122	165	226	280	6	6	790	—	112	155	200	280	345	—	7.5	900	—	145	200	265	345	—	9.5	1030	212	335	12
92	460	760	95	132	175	240	300	6	7.5	830	—	118	165	212	296	365	—	7.5	950	—	155	212	280	365	—	9.5	1060	218	345	12
96	480	790	100	136	180	248	308	6	7.5	870	—	125	170	224	310	388	—	7.5	980	—	160	218	290	375	—	9.5	1120	230	365	15
/500	500	830	106	145	190	264	325	7.5	7.5	920	—	136	185	243	336	412	—	7.5	1030	—	170	230	300	388	—	12	1150	236	375	15
/530	530	870	109	150	195	272	335	7.5	7.5	980	—	145	200	258	355	450	—	9.5	1090	—	180	243	325	412	—	12	1220	250	400	15
/560	560	920	115	160	206	280	355	7.5	7.5	1030	—	150	206	272	365	475	—	9.5	1150	—	190	258	335	438	—	12	1280	258	412	15
/600	600	980	122	170	218	300	375	7.5	7.5	1090	—	155	212	280	388	488	—	9.5	1220	—	200	272	355	462	—	15	1360	272	438	15
/630	630	1030	128	175	230	315	400	7.5	7.5	1150	—	165	230	300	412	515	—	12	1280	—	206	280	375	488	—	15	1420	280	450	15
/670	670	1090	136	185	243	336	412	7.5	7.5	1220	—	175	243	315	438	545	—	12	1360	—	218	300	400	515	—	15	1500	290	475	15
/710	710	1150	140	195	250	345	438	9.5	9.5	1280	—	180	250	325	450	560	—	12	1420	—	224	308	412	530	—	15	—	—	—	—
/750	750	1220	150	206	272	365	475	9.5	9.5	1360	—	195	265	345	475	615	—	15	1500	—	236	325	438	560	—	15	—	—	—	—
/800	800	1280	155	212	272	375	475	9.5	9.5	1420	—	200	272	355	488	615	—	15	1600	—	258	355	462	600	—	15	—	—	—	—
/850	850	1360	165	224	290	400	500	12	12	1500	—	206	280	375	515	650	—	15	1700	—	272	375	488	630	—	19	—	—	—	—
/900	900	1420	165	230	300	412	515	12	12	1580	—	218	300	388	515	670	—	15	1780	—	280	388	500	650	—	19	—	—	—	—
/950	950	1500	175	243	315	438	545	12	12	1660	—	230	315	412	530	710	—	15	1850	—	290	400	515	670	—	19	—	—	—	—
/1000	1000	1580	185	258	335	462	580	12	12	1750	—	243	330	425	560	750	—	15	1950	—	300	412	545	710	—	19	—	—	—	—
/1060	1060	1660	190	265	345	475	600	12	15	—	—	—	—	—	—	—	—	—	—	—	—	—	—	—	—	—	—	—	—	—
/1120	1120	1750	—	280	365	475	630	—	15	—	—	—	—	—	—	—	—	—	—	—	—	—	—	—	—	—	—	—	—	—
/1180	1180	1850	—	290	388	500	670	—	15	—	—	—	—	—	—	—	—	—	—	—	—	—	—	—	—	—	—	—	—	—
/1250	1250	1950	—	308	400	530	710	—	15	—	—	—	—	—	—	—	—	—	—	—	—	—	—	—	—	—	—	—	—	—
/1320	1320	2060	—	325	425	560	750	—	15	—	—	—	—	—	—	—	—	—	—	—	—	—	—	—	—	—	—	—	—	—
/1400	1400	2180	—	345	450	580	775	—	19	—	—	—	—	—	—	—	—	—	—	—	—	—	—	—	—	—	—	—	—	—
/1500	1500	2300	—	355	462	600	800	—	19	—	—	—	—	—	—	—	—	—	—	—	—	—	—	—	—	—	—	—	—	—

Appendix table 2: Comparison of SI, CGS and gravity units-1

Quantity / Unit system	Length L	Mass M	Time T	Acceleration	Force	Stress	Pressure	Energy
SI	m	kg	s	m/s^2	N	Pa	Pa	J
CGS system	cm	g	s	Gal	dyn	dyn/cm^2	dyn/cm^2	erg
Gravitation system	m	$kgf \cdot s^2/m$	s	m/s^2	kgf	kgf/m^2	kgf/m^2	$kgf \cdot m$

Appendix table 3: SI-customary unit conversion table-1

Quantity	Unit designation	Symbol	Conversion rate to SI	SI unit designation	Symbol
Angle	Degree	°	π/180	Radian	rad
	Minute	′	π/10 800		
	Second	″(sec)	π/648 000		
Length	Meter	m	1	Meter	m
	Micron	μ	10^{-6}		
	Angstrom	Å	10^{-10}		
Area	Square meter	m^2	1	Square meter	m^2
	Are	a	10^2		
	Hectare	ha	10^4		
Volume	Cubic meter	m^3	1	Cubic meter	m^3
	Liter	R.L	10^{-3}		
Mass	Kilogram	kg	1	Kilogram	kg
	Ton	t	10^3		
	Kilogram force / square second per meter	$kgf \cdot s^2/m$	9.806 65		
Time	Second	s	1	Second	s
	Minute	min	60		
	Hour	h	3 600		
	Day	d	86 400		
Speed	Meters per second	m/s	1	Meters per second	m/s
	Knot	kn	1 852/3 600		
Frequency and vibration	Cycle	s^{-1} (pps)	1	Hertz	Hz
Revolutions (rotational speed)	Revolutions per minute (rpm)	rpm(r/min)	1/60	Per second	s^{-1}
Angular speed	Radians per second	rad/s	1	Radians per second	rad/s
Acceleration	Meters per square second	m/s^2	1	Meters per second square	m/s^2
	G	G	9.806 65		
Force	Kilogram force	kgf	9.806 65	Newton	N
	Ton force	tf	9 806.65		
	Dyne	dyn	10^{-5}		
Force moment	Kilogram force / meter	$kgf \cdot m$	9.806 65	Newton meter	$N \cdot m$
Inertia moment	Kilogram force / meter / square second	$kgf \cdot m \cdot s^2$	9.806 65	Kilogram / square meter	$kg \cdot m^2$
Stress	Kilogram force per square meter	kgf/m^2	9.806 65	Pascal or newton per square meter	Pa or N/m^2
Pressure	Kilogram force per square meter	kgf/m^2	9.806 65	Pascal	Pa
	Meter water column	mH_2O	9 806.65		
	Meter of mercury	mHg	101 325/0.76		
	Torr	Torr	101 325/760		
	Atmosphere	atm	101 325		
	Bar	bar	10^5		
Energy	Erg	erg	10^{-7}	Joule	J
	IT calorie	cal_{IT}	4.186 8		
	Kilogram force / meter	$kgf \cdot m$	9.806 65		
	Kilowatt hour	$kW \cdot h$	3.600×10^6		
	Metric horsepower per hour	$PS \cdot h$	$2.647\ 79 \times 10^6$		
Power rate and power	Watt	W	1	Watt	W
	Metric horsepower	PS	735.5		
	Kilogram force / meter per second	$kgf \cdot m/s$	9.806 65		

Appendix table 2: Comparison of SI, CGS and gravity units-2

Quantity / Unit system	Power rate	Temperature	Viscosity	Dynamic viscosity	Magnetic flux	Flux density	Magnetic field strength
SI	W	K	Pa・s	m^2/s	Wb	T	A/m
CGS system	erg/s	℃	P	St	Mx	Gs	Oe
Gravitation system	kgf・m/s	℃	kgf・s/m^2	m^2/s	—	—	—

Appendix table 3: SI-customary unit conversion table-2

Quantity	Unit designation	Symbol	Conversion rate to SI	SI unit designation	Symbol
Viscosity	Poise	P	10^{-1}	Pascal second	Pa・s
	Centipoise	cP	10^{-3}		
	Kilogram force / square second per meter	kgf・s/m^2	9.806 65		
Dynamic viscosity	Stoke	St	10^{-4}	Square meter per second	m^2/s
	Centistoke	cSt	10^{-6}		
Temperature	Degree	˚C	+273.15	Kelvin	K
Radioactive	Curie	Ci	3.7×10^{10}	Becquerel	Bq
Dosage	Roentgen	R	2.58×10^{-4}	Coulombs per kilogram	C/kg
Absorption dosage	Rad	rad	10^{-2}	Gray	Gy
Dosage equivalent	Rem	rem	10^{-2}	Sievert	Sv
Magnetic flux	Maxwell	Mx	10^{-8}	Weber	Wb
Flux density	Gamma	**γ**	10^{-9}	Tesla	T
	Gauss	Gs	10^{-4}		
Magnetic field strength	Oersted	Oe	$10^3/4\pi$	Amperes per meter	A/m
Quantity of electricity	Coulomb	C	1	Coulomb	C
Potential difference	Volt	V	1	Volt	V
Electric resistance	Ohm	**Ω**	1	Ohm	**Ω**
Current	Ampere	A	1	Ampere	A

Appendix table 4: Tenth power multiples of SI unit

Multiples of unit	Prefix		Multiples of unit	Prefix	
	Name	Symbol		Name	Symbol
10^{18}	Exa	E	10^{-1}	Deci	d
10^{15}	Peta	P	10^{-2}	Centi	c
10^{12}	Tera	T	10^{-3}	Mili	m
10^{9}	Giga	G	10^{-6}	Micro	**μ**
10^{6}	Mega	M	10^{-9}	Nano	n
10^{3}	Kilo	k	10^{-12}	Pico	p
10^{2}	Hecto	h	10^{-15}	Femto	f
10	Deca	da	10^{-18}	Ato	a

Appendix table 5: Dimensional tolerance for shafts

Diameter division mm over	incl.	a13 high	a13 low	c12 high	c12 low	d6 high	d6 low	e6 high	e6 low	e13 high	e13 low	f5 high	f5 low	f6 high	f6 low	g5 high	g5 low	g6 high	g6 low
3	6	− 270	− 450	− 70	− 190	− 30	− 38	− 20	− 28	− 20	− 200	−10	−15	− 10	− 18	− 4	− 9	− 4	− 12
6	10	− 280	− 500	− 80	− 230	− 40	− 49	− 25	− 34	− 25	− 245	−13	−19	− 13	− 22	− 5	−11	− 5	− 14
10	18	− 290	− 560	− 95	− 275	− 50	− 61	− 32	− 43	− 32	− 302	−16	−24	− 16	− 27	− 6	−14	− 6	− 17
18	30	− 300	− 630	−110	− 320	− 65	− 78	− 40	− 53	− 40	− 370	−20	−29	− 20	− 33	− 7	−16	− 7	− 20
30	40	− 310	− 700	−120	− 370	− 80	− 96	− 50	− 66	− 50	− 440	−25	−36	− 25	− 41	− 9	−20	− 9	− 25
40	50	− 320	− 710	−130	− 380														
50	65	− 340	− 800	−140	− 440	−100	−119	− 60	− 79	− 60	− 520	−30	−43	− 30	− 49	−10	−23	−10	− 29
65	80	− 360	− 820	−150	− 450														
80	100	− 380	− 920	−170	− 520	−120	−142	− 72	− 94	− 72	− 612	−36	−51	− 36	− 58	−12	−27	−12	− 34
100	120	− 410	− 950	−180	− 530														
120	140	− 460	−1 090	−200	− 600	−145	−170	− 85	−110	− 85	− 715	−43	−61	− 43	− 68	−14	−32	−14	− 39
140	160	− 520	−1 150	−210	− 610														
160	180	− 580	−1 210	−230	− 630														
180	200	− 660	−1 380	−240	− 700	−170	−199	−100	−129	−100	− 820	−50	−70	− 50	− 79	−15	−35	−15	− 44
200	225	− 740	−1 460	−260	− 720														
225	250	− 820	−1 540	−280	− 740														
250	280	− 920	−1 730	−300	− 820	−190	−222	−110	−142	−110	− 920	−56	−79	− 56	− 88	−17	−40	−17	− 49
280	315	−1 050	−1 860	−330	− 850														
315	355	−1 200	−2 090	−360	− 930	−210	−246	−125	−161	−125	−1 015	−62	−87	− 62	− 98	−18	−43	−18	− 54
355	400	−1 350	−2 240	−400	− 970														
400	450	−1 500	−2 470	−440	−1 070	−230	−270	−135	−175	−135	−1 105	−68	−95	− 68	−108	−20	−47	−20	− 60
450	500	−1 650	−2 620	−480	−1 110														
500	560	−	−	−	−	−260	−304	−145	−189	−	−	−	−	− 76	−120	−	−	−22	− 66
560	630																		
630	710	−	−	−	−	−290	−340	−160	−210	−	−	−	−	− 80	−130	−	−	−24	− 74
710	800																		
800	900	−	−	−	−	−320	−376	−170	−226	−	−	−	−	− 86	−142	−	−	−26	− 82
900	1 000																		
1 000	1 120	−	−	−	−	−350	−416	−195	−261	−	−	−	−	− 98	−164	−	−	−28	− 94
1 120	1 250																		
1 250	1 400	−	−	−	−	−390	−468	−220	−298	−	−	−	−	−110	−188	−	−	−30	−108
1 400	1 600																		

Diameter division mm over	incl.	j5 high	j5 low	js5 high	js5 low	j6 high	j6 low	js6 high	js6 low	j7 high	j7 low	k4 high	k4 low	k5 high	k5 low	k6 high	k6 low	m5 high	m5 low
3	6	+3	− 2	+ 2.5	− 2.5	+ 6	− 2	+ 4	− 4	+ 8	− 4	+ 5	+1	+ 6	+1	+ 9	+1	+ 9	+ 4
6	10	+4	− 2	+ 3	− 3	+ 7	− 2	+ 4.5	− 4.5	+10	− 5	+ 5	+1	+ 7	+1	+10	+1	+12	+ 6
10	18	+5	− 3	+ 4	− 4	+ 8	− 3	+ 5.5	− 5.5	+12	− 6	+ 6	+1	+ 9	+1	+12	+1	+15	+ 7
18	30	+5	− 4	+ 4.5	− 4.5	+ 9	− 4	+ 6.5	− 6.5	+13	− 8	+ 8	+2	+11	+2	+15	+2	+17	+ 8
30	40	+6	− 5	+ 5.5	− 5.5	+11	− 5	+ 8	− 8	+15	−10	+ 9	+2	+13	+2	+18	+2	+20	+ 9
40	50																		
50	65	+6	− 7	+ 6.5	− 6.5	+12	− 7	+ 9.5	− 9.5	+18	−12	+10	+2	+15	+2	+21	+2	+24	+11
65	80																		
80	100	+6	− 9	+ 7.5	− 7.5	+13	− 9	+11	−11	+20	−15	+13	+3	+18	+3	+25	+3	+28	+13
100	120																		
120	140	+7	−11	+ 9	− 9	+14	−11	+12.5	−12.5	+22	−18	+15	+3	+21	+3	+28	+3	+33	+15
140	160																		
160	180																		
180	200	+7	−13	+10	−10	+16	−13	+14.5	−14.5	+25	−21	+18	+4	+24	+4	+33	+4	+37	+17
200	225																		
225	250																		
250	280	+7	−16	+11.5	−11.5	+16	−16	+16	−16	+26	−26	+20	+4	+27	+4	+36	+4	+43	+20
280	315																		
315	355	+7	−18	+12.5	−12.5	+18	−18	+18	−18	+29	−28	+22	+4	+29	+4	+40	+4	+46	+21
355	400																		
400	450	+7	−20	+13.5	−13.5	+20	−20	+20	−20	+31	−32	+25	+5	+32	+5	+45	+5	+50	+23
450	500																		
500	560	−	−	−	−	−	−	+22	−22	−	−	−	−	−	−	+44	0	−	−
560	630																		
630	710	−	−	−	−	−	−	+25	−25	−	−	−	−	−	−	+50	0	−	−
710	800																		
800	900	−	−	−	−	−	−	+28	−28	−	−	−	−	−	−	+56	0	−	−
900	1 000																		
1 000	1 120	−	−	−	−	−	−	+33	−33	−	−	−	−	−	−	+66	0	−	−
1 120	1 250																		
1 250	1 400	−	−	−	−	−	−	+39	−39	−	−	−	−	−	−	+78	0	−	−
1 400	1 600																		

Unit μm

h4		h5		h6		h7		h8		h9		h10		h11		h13		js4		Diameter division mm	
high	low	high	low	high	low	high	low	high	low	high	low	high	low	high	low	high	low	high	low	over	incl.
0	− 4	0	− 5	0	− 8	0	− 12	0	− 18	0	− 30	0	− 48	0	− 75	0	−180	+ 2	− 2	3	6
0	− 4	0	− 6	0	− 9	0	− 15	0	− 22	0	− 36	0	− 58	0	− 90	0	−220	+ 2	− 2	6	10
0	− 5	0	− 8	0	−11	0	− 18	0	− 27	0	− 43	0	− 70	0	−110	0	−270	+ 2.5	− 2.5	10	18
0	− 6	0	− 9	0	−13	0	− 21	0	− 33	0	− 52	0	− 84	0	−130	0	−330	+ 3	− 3	18	30
0	− 7	0	− 11	0	−16	0	− 25	0	− 39	0	− 62	0	−100	0	−160	0	−390	+ 3.5	− 3.5	30 40	40 50
0	− 8	0	−13	0	−19	0	− 30	0	− 46	0	− 74	0	−120	0	−190	0	−460	+ 4	− 4	50 65	65 80
0	−10	0	−15	0	−22	0	− 35	0	− 54	0	− 87	0	−140	0	−220	0	−540	+ 5	− 5	80 100	100 120
0	−12	0	−18	0	−25	0	− 40	0	− 63	0	−100	0	−160	0	−250	0	−630	+ 6	− 6	120 140 160	140 160 180
0	−14	0	−20	0	−29	0	− 46	0	− 72	0	−115	0	−185	0	−290	0	−720	+ 7	− 7	180 200 225	200 225 250
0	−16	0	−23	0	−32	0	− 52	0	− 81	0	−130	0	−210	0	−320	0	−810	+ 8	− 8	250 280	280 315
0	−18	0	−25	0	−36	0	− 57	0	− 89	0	−140	0	−230	0	−360	0	−890	+ 9	− 9	315 355	355 400
0	−20	0	−27	0	−40	0	− 63	0	− 97	0	−155	0	−250	0	−400	0	−970	+10	−10	400 450	450 500
—	—	—	—	0	−44	0	− 70	0	−110	0	−175	0	−280	0	−440	0	—	—	—	500 560	560 630
—	—	—	—	0	−50	0	− 80	0	−125	0	−200	0	−320	0	−500	0	—	—	—	630 710	710 800
—	—	—	—	0	−56	0	− 90	0	−140	0	−230	0	−360	0	−560	0	—	—	—	800 900	900 1 000
—	—	—	—	0	−66	0	−105	0	−165	0	−260	0	−420	0	−660	0	—	—	—	1 000 1 120	1 120 1 250
—	—	—	—	0	−78	0	−125	0	−195	0	−310	0	−500	0	−780	0	—	—	—	1 250 1 400	1 400 1 600

Unit μm

m6		n5		n6		p5		p6		r6		r7		Basic tolerance				Diameter division mm	
high	low	high	low	high	low	high	low	high	low	high	low	high	low	IT2	IT3	IT5	IT7	over	incl.
+ 12	+ 4	+13	+ 8	+ 16	+ 8	+17	+12	+ 20	+ 12	+ 23	+ 15	+ 27	+ 15	1.5	2.5	5	12	3	6
+ 15	+ 6	+16	+10	+ 19	+10	+21	+15	+ 24	+ 15	+ 28	+ 19	+ 34	+ 19	1.5	2.5	6	15	6	10
+ 18	+ 7	+20	+12	+ 23	+12	+26	+18	+ 29	+ 18	+ 34	+ 23	+ 41	+ 23	2	3	8	18	10	18
+ 21	+ 8	+24	+15	+ 28	+15	+31	+22	+ 35	+ 22	+ 41	+ 28	+ 49	+ 28	2.5	4	9	21	18	30
+ 25	+ 9	+28	+17	+ 33	+17	+37	+26	+ 42	+ 26	+ 50	+ 34	+ 59	+ 34	2.5	4	11	25	30 40	40 50
+ 30	+11	+33	+20	+ 39	+20	+45	+32	+ 51	+ 32	+ 60 + 62	+ 41 + 43	+ 71 + 73	+ 41 + 43	3	5	13	30	50 65	65 80
+ 35	+13	+38	+23	+ 45	+23	+52	+37	+ 59	+ 37	+ 73 + 76	+ 51 + 54	+ 86 + 89	+ 51 + 54	4	6	15	35	80 100	100 120
+ 40	+15	+45	+27	+ 52	+27	+61	+43	+ 68	+ 43	+ 88 + 90 + 93	+ 63 + 65 + 68	+103 +105 +108	+ 63 + 65 + 68	5	8	18	40	120 140 160	140 160 180
+ 46	+17	+51	+31	+ 60	+31	+70	+50	+ 79	+ 50	+106 +109 +113	+ 77 + 80 + 84	+123 +126 +130	+ 77 + 80 + 84	7	10	20	46	180 200 225	200 225 250
+ 52	+20	+57	+34	+ 66	+34	+79	+56	+ 88	+ 56	+126 +130	+ 94 + 98	+146 +150	+ 94 + 98	8	12	23	52	250 280	280 315
+ 57	+21	+62	+37	+ 73	+37	+87	+62	+ 98	+ 62	+144 +150	+108 +114	+165 +171	+108 +114	9	13	25	57	315 355	355 400
+ 63	+23	+67	+40	+ 80	+40	+95	+68	+108	+ 68	+166 +172	+126 +132	+189 +195	+126 +132	10	15	27	63	400 450	450 500
+ 70	+26	—	—	+ 88	+44	—	—	+122	+ 78	+194 +199	+150 +155	+220 +225	+150 +155	—	—	—	70	500 560	560 630
+ 80	+30	—	—	+100	+50	—	—	+138	+ 88	+225 +235	+175 +185	+255 +265	+175 +185	—	—	—	80	630 710	710 800
+ 90	+34	—	—	+112	+56	—	—	+156	+100	+266 +276	+210 +220	+300 +310	+210 +220	—	—	—	90	800 900	900 1 000
+106	+40	—	—	+132	+66	—	—	+186	+120	+316 +326	+250 +260	+355 +365	+250 +260	—	—	—	105	1 000 1 120	1 120 1 250
+126	+48	—	—	+156	+78	—	—	+218	+140	+378 +408	+300 +330	+425 +455	+300 +330	—	—	—	125	1 250 1 400	1 400 1 600

Appendix table 6: Dimensional tolerance for housing bore

Diameter division mm over	incl.	E7 high	E7 low	E10 high	E10 low	E11 high	E11 low	E12 high	E12 low	F6 high	F6 low	F7 high	F7 low	F8 high	F8 low	G6 high	G6 low	G7 high	G7 low	H6 high	H6 low
3	6	+ 32	+ 20	+ 68	+ 20	+ 95	+ 20	+140	+ 20	+ 18	+ 10	+ 22	+ 10	+ 28	+ 10	+ 12	+ 4	+ 16	+ 4	+ 8	0
6	10	+ 40	+ 25	+ 83	+ 25	+115	+ 25	+175	+ 25	+ 22	+ 13	+ 28	+ 13	+ 35	+ 13	+ 14	+ 5	+ 20	+ 5	+ 9	0
10	18	+ 50	+ 32	+102	+ 32	+142	+ 32	+212	+ 32	+ 27	+ 16	+ 34	+ 16	+ 43	+ 16	+ 17	+ 6	+ 24	+ 6	+11	0
18	30	+ 61	+ 40	+124	+ 40	+170	+ 40	+250	+ 40	+ 33	+ 20	+ 41	+ 20	+ 53	+ 20	+ 20	+ 7	+ 28	+ 7	+13	0
30	40	+ 75	+ 50	+150	+ 50	+210	+ 50	+300	+ 50	+ 41	+ 25	+ 50	+ 25	+ 64	+ 25	+ 25	+ 9	+ 34	+ 9	+16	0
40	50																				
50	65	+ 90	+ 60	+180	+ 60	+250	+ 60	+360	+ 60	+ 49	+ 30	+ 60	+ 30	+ 76	+ 30	+ 29	+10	+ 40	+10	+19	0
65	80																				
80	100	+107	+ 72	+212	+ 72	+292	+ 72	+422	+ 72	+ 58	+ 36	+ 71	+ 36	+ 90	+ 36	+ 34	+12	+ 47	+12	+22	0
100	120																				
120	140	+125	+ 85	+245	+ 85	+335	+ 85	+485	+ 85	+ 68	+ 43	+ 83	+ 43	+106	+ 43	+ 39	+14	+ 54	+14	+25	0
140	160																				
160	180																				
180	200	+146	+100	+285	+100	+390	+100	+560	+100	+ 79	+ 50	+ 96	+ 50	+122	+ 50	+ 44	+15	+ 61	+15	+29	0
200	225																				
225	250																				
250	280	+162	+110	+320	+110	+430	+110	+630	+110	+ 88	+ 56	+108	+ 56	+137	+ 56	+ 49	+17	+ 69	+17	+32	0
280	315																				
315	355	+182	+125	+355	+125	+485	+125	+695	+125	+ 98	+ 62	+119	+ 62	+151	+ 62	+ 54	+18	+ 75	+18	+36	0
355	400																				
400	450	+198	+135	+385	+135	+535	+135	+765	+135	+108	+ 68	+131	+ 68	+165	+ 68	+ 60	+20	+ 83	+20	+40	0
450	500																				
500	560	+215	+145	–	–	–	–	–	–	+120	+ 76	+146	+ 76	+186	+ 76	+ 66	+22	+ 92	+22	+44	0
560	630																				
630	710	+240	+160	–	–	–	–	–	–	+130	+ 80	+160	+ 80	+205	+ 80	+ 74	+24	+104	+24	+50	0
710	800																				
800	900	+260	+170	–	–	–	–	–	–	+142	+ 86	+176	+ 86	+226	+ 86	+ 82	+26	+116	+26	+56	0
900	1 000																				
1 000	1 120	+300	+195	–	–	–	–	–	–	+164	+ 98	+203	+ 98	+263	+ 98	+ 94	+28	+133	+28	+66	0
1 120	1 250																				
1 250	1 400	+345	+220	–	–	–	–	–	–	+188	+110	+235	+110	+305	+110	+108	+30	+155	+30	+78	0
1 400	1 600																				
1 600	1 800	+390	+240	–	–	–	–	–	–	+212	+120	+270	+120	+350	+120	+124	+32	+182	+32	+92	0
1 800	2 000																				

Unit μm

Diameter division mm over	incl.	K6 high	K6 low	K7 high	K7 low	M6 high	M6 low	M7 high	M7 low	N6 high	N6 low	N7 high	N7 low	P6 high	P6 low	P7 high	P7 low	R6 high	R6 low	R7 high	R7 low
3	6	+2	– 6	+ 3	– 9	– 1	– 9	0	– 12	– 5	– 13	– 4	– 16	– 9	– 17	– 8	– 20	– 12	– 20	– 11	– 23
6	10	+2	– 7	+ 5	– 10	– 3	– 12	0	– 15	– 7	– 16	– 4	– 19	– 12	– 21	– 9	– 24	– 16	– 25	– 13	– 28
10	18	+2	– 9	+ 6	– 12	– 4	– 15	0	– 18	– 9	– 20	– 5	– 23	– 15	– 26	– 11	– 29	– 20	– 31	– 16	– 34
18	30	+2	–11	+ 6	– 15	– 4	– 17	0	– 21	–11	– 24	– 7	– 28	– 18	– 31	– 14	– 35	– 24	– 37	– 20	– 41
30	40	+3	–13	+ 7	– 18	– 4	– 20	0	– 25	–12	– 28	– 8	– 33	– 21	– 37	– 17	– 42	– 29	– 42	– 25	– 50
40	50																				
50	65	+4	–15	+ 9	– 21	– 5	– 24	0	– 30	–14	– 33	– 9	– 39	– 26	– 45	– 21	– 51	– 35	– 54	– 30	– 60
65	80																	– 37	– 56	– 32	– 62
80	100	+4	–18	+10	– 25	– 6	– 28	0	– 35	–16	– 38	–10	– 45	– 30	– 52	– 24	– 59	– 44	– 66	– 38	– 73
100	120																	– 47	– 69	– 41	– 76
120	140	+4	–21	+12	– 28	– 8	– 33	0	– 40	–20	– 45	– 12	– 52	– 36	– 61	– 28	– 68	– 56	– 81	– 48	– 88
140	160																	– 58	– 83	– 50	– 90
160	180																	– 61	– 86	– 53	– 93
180	200	+5	–24	+13	– 33	– 8	– 37	0	– 46	–22	– 51	–14	– 60	– 41	– 70	– 33	– 79	– 68	– 97	– 60	–106
200	225																	– 71	–100	– 63	–109
225	250																	– 75	–104	– 67	–113
250	280	+5	–27	+16	– 36	– 9	– 41	0	– 52	–25	– 57	–14	– 66	– 47	– 79	– 36	– 88	– 85	–117	– 74	–126
280	315																	– 89	–121	– 78	–130
315	355	+7	–29	+17	– 40	–10	– 46	0	– 57	–26	– 62	–16	– 73	– 51	– 87	– 41	– 98	– 97	–133	– 87	–144
355	400																	–103	–139	– 93	–150
400	450	+8	–32	+18	– 45	–10	– 50	0	– 63	–27	– 67	–17	– 80	– 55	– 95	– 45	–108	–113	–153	–103	–166
450	500																	–119	–159	–109	–172
500	560	0	–44	0	– 70	–26	– 70	–26	– 96	–44	– 88	–44	–114	– 78	–122	– 78	–148	–150	–194	–150	–220
560	630																	–155	–199	–155	–225
630	710	0	–50	0	– 80	–30	– 80	–30	–100	–50	–100	–50	–130	– 88	–138	– 88	–168	–175	–225	–175	–225
710	800																	–185	–235	–185	–265
800	900	0	–56	0	– 90	–34	– 90	–34	– 124	–56	–112	–56	–146	–100	–156	–100	–190	–210	–266	–210	–300
900	1 000																	–220	–276	–220	–310
1 000	1 120	0	–66	0	–105	–40	–106	–40	–145	–66	–132	–66	–171	–120	–186	–120	–225	–250	–316	–250	–355
1 120	1 250																	–260	–326	–260	–365
1 250	1 400	0	–78	0	–125	–48	–126	–48	–173	–78	–156	–78	–203	–140	–213	–140	–265	–300	–378	–300	–425
1 400	1 600																	–330	–408	–330	–455
1 600	1 800	0	–92	0	–150	–58	–150	–58	–208	–92	–184	–92	–242	–170	–262	–170	–320	–370	–462	–370	–520
1 800	2 000																	–400	–492	–400	–550

Unit μm

H7		H8		H9		H10		H11		H13		J6		Js6		J7		Js7		K5		Diameter division mm	
high	low	high	low	high	low	high	low	high	low	high	low	high	low	high	low	high	low	high	low	high	low	over	incl.
+ 12	0	+ 18	0	+ 30	0	+ 48	0	+ 75	0	+180	0	+ 5	−3	+ 4	− 4	+ 6	− 6	+ 6	− 6	0	− 5	3	6
+ 15	0	+ 22	0	+ 36	0	+ 58	0	+ 90	0	+220	0	+ 5	−4	+ 4.5	− 4.5	+ 8	− 7	+ 7.5	− 7.5	+1	− 5	6	10
+ 18	0	+ 27	0	+ 43	0	+ 70	0	+110	0	+270	0	+ 6	−5	+ 5.5	− 5.5	+10	− 8	+ 9	− 9	+2	− 6	10	18
+ 21	0	+ 33	0	+ 52	0	+ 84	0	+130	0	+330	0	+ 8	−5	+ 6.5	− 6.5	+12	− 9	+10.5	−10.5	+1	− 8	18	30
+ 25	0	+ 39	0	+ 62	0	+100	0	+160	0	+390	0	+10	−6	+ 8	− 8	+14	−11	+12.5	−12.5	+2	− 9	30 40	40 50
+ 30	0	+ 46	0	+ 74	0	+120	0	+190	0	+460	0	+13	−6	+ 9.5	− 9.5	+18	−12	+15	−15	+3	−10	50 65	65 80
+ 35	0	+ 54	0	+ 87	0	+140	0	+220	0	+540	0	+16	−6	+11	−11	+22	−13	+17.5	−17.5	+2	−13	80 100	100 120
+ 40	0	+ 63	0	+100	0	+160	0	+250	0	+630	0	+18	−7	+12.5	−12.5	+26	−14	+20	−20	+3	−15	120 140 160	140 160 180
+ 46	0	+ 72	0	+115	0	+185	0	+290	0	+720	0	+22	−7	+14.5	−14.5	+30	−16	+23	−23	+2	−18	180 200 225	200 225 250
+ 52	0	+ 81	0	+130	0	+210	0	+320	0	+810	0	+25	−7	+16	−16	+36	−16	+26	−26	+3	−20	250 280	280 315
+ 57	0	+ 89	0	+140	0	+230	0	+360	0	+890	0	+29	−7	+18	−18	+39	−18	+28.5	−28.5	+3	−22	315 355	355 400
+ 63	0	+ 97	0	+155	0	+250	0	+400	0	+970	0	+33	−7	+20	−20	+43	−20	+31.5	−31.5	+2	−25	400 450	450 500
+ 70	0	+110	0	+175	0	+280	0	+440	0	−	0	−	−	+22	−22	−	−	+35	−35	−	−	500 560	560 630
+ 80	0	+125	0	+200	0	+320	0	+500	0	−	0	−	−	+25	−25	−	−	+40	−40	−	−	630 710	710 800
+ 90	0	+140	0	+230	0	+360	0	+560	0	−	0	−	−	+28	−28	−	−	+45	−45	−	−	800 900	900 1 000
+105	0	+165	0	+260	0	+420	0	+660	0	−	0	−	−	+33	−33	−	−	+52.5	−52.5	−	−	1 000 1 120	1 120 1 250
+125	0	+195	0	+310	0	+500	0	+780	0	−	0	−	−	+39	−39	−	−	+62.5	−62.5	−	−	1 250 1 400	1 400 1 600
+150	0	+230	0	+370	0	+600	0	+920	0	−	0	−	−	+46	−46	−	−	+75	−75	−	−	1 600 1 800	1 800 2 000

Appendix table 7: Basic tolerance

Unit μm

Diameter division mm		IT basic tolerance class									
over	incl.	IT1	IT2	IT3	IT4	IT5	IT6	IT7	IT8	IT9	IT10
—	3	0.8	1.2	2	3	4	6	10	14	25	40
3	6	1	1.5	2.5	4	5	8	12	18	30	48
6	10	1	1.5	2.5	4	6	9	15	22	36	58
10	18	1.2	2	3	5	8	11	18	27	43	70
18	30	1.5	2.5	4	6	9	13	21	33	52	84
30	50	1.5	2.5	4	7	11	16	25	39	62	100
50	80	2	3	5	8	13	19	30	46	74	120
80	120	2.5	4	6	10	15	22	35	54	87	140
120	180	3.5	5	8	12	18	25	40	63	100	160
180	250	4.5	7	10	14	20	29	46	72	115	185
250	315	6	8	12	16	23	32	52	81	130	210
315	400	7	9	13	18	25	36	57	89	140	230
400	500	8	10	15	20	27	40	63	97	155	250
500	630	9	11	16	22	30	44	70	110	175	280
630	800	10	13	18	25	35	50	80	125	200	320
800	1 000	11	15	21	29	40	56	90	140	230	360
1 000	1 250	13	18	24	34	46	66	105	165	260	420
1 250	1 600	15	21	29	40	54	78	125	195	310	500
1 600	2 000	18	25	35	48	65	92	150	230	370	600
2 000	2 500	22	30	41	57	77	110	175	280	440	700
2 500	3 150	26	36	50	69	93	135	210	330	540	860

Appendix table 8: Viscosity conversion table

Kinematic viscosity mm^2/s	Saybolt SUS (second)	Redwood R"(second)	Engler E (degree)
2.7	35	32.2	1.18
4.3	40	36.2	1.32
5.9	45	40.6	1.46
7.4	50	44.9	1.60
8.9	55	49.1	1.75
10.4	60	53.5	1.88
11.8	65	57.9	2.02
13.1	70	62.3	2.15
14.5	75	67.6	2.31
15.8	80	71.0	2.42
17.0	85	75.1	2.55
18.2	90	79.6	2.68
19.4	95	84.2	2.81
20.6	100	88.4	2.95
23.0	110	97.1	3.21
25.0	120	105.9	3.49
27.5	130	114.8	3.77
29.8	140	123.6	4.04
32.1	150	132.4	4.32
34.3	160	141.1	4.59
36.5	170	150.0	4.88
38.8	180	158.8	5.15
41.0	190	167.5	5.44
43.2	200	176.4	5.72
47.5	220	194.0	6.28
51.9	240	212	6.85
56.5	260	229	7.38
60.5	280	247	7.95
64.9	300	265	8.51
70.3	325	287	9.24
75.8	350	309	9.95
81.2	375	331	10.7
86.8	400	353	11.4
92.0	425	375	12.1
97.4	450	397	12.8

Kinematic viscosity mm^2/s	Saybolt SUS (second)	Redwood R"(second)	Engler E (degree)
103	475	419	13.5
108	500	441	14.2
119	550	485	15.6
130	600	529	17.0
141	650	573	18.5
152	700	617	19.9
163	750	661	21.3
173	800	705	22.7
184	850	749	24.2
195	900	793	25.6
206	950	837	27.0
217	1 000	882	28.4
260	1 200	1 058	34.1
302	1 400	1 234	39.8
347	1 600	1 411	45.5
390	1 800	1 587	51
433	2 000	1 763	57
542	2 500	2 204	71
650	3 000	2 646	85
758	3 500	3 087	99
867	4 000	3 526	114
974	4 500	3 967	128
1 082	5 000	4 408	142
1 150	5 500	4 849	156
1 300	6 000	5 290	170
1 400	6 500	5 730	185
1 510	7 000	6 171	199
1 630	7 500	6 612	213
1 740	8 000	7 053	227
1 850	8 500	7 494	242
1 960	9 000	7 934	256
2 070	9 500	8 375	270
2 200	10 000	8 816	284

Appendix table 9: Kgf to N conversion table

kgf		N	kgf		N	kgf		N
0.1020	**1**	9.8066	3.4670	**34**	333.43	6.8321	**67**	657.04
0.2039	**2**	19.613	3.5690	**35**	343.23	6.9341	**68**	666.85
0.3059	**3**	29.420	3.6710	**36**	353.04	7.0361	**69**	676.66
0.4079	**4**	39.227	3.7730	**37**	362.85	7.1380	**70**	686.46
0.5099	**5**	49.033	3.8749	**38**	372.65	7.2400	**71**	696.27
0.6118	**6**	58.840	3.9769	**39**	382.46	7.3420	**72**	706.08
0.7138	**7**	68.646	4.0789	**40**	392.27	7.4440	**73**	715.88
0.8158	**8**	78.453	4.1808	**41**	402.07	7.5459	**74**	725.69
0.9177	**9**	88.260	4.2828	**42**	411.88	7.6479	**75**	735.50
1.0197	**10**	98.066	4.3848	**43**	421.68	7.7499	**76**	745.30
1.1217	**11**	107.87	4.4868	**44**	431.49	7.8518	**77**	755.11
1.2237	**12**	117.68	4.5887	**45**	441.30	7.9538	**78**	764.92
1.3256	**13**	127.49	4.6907	**46**	451.10	8.0558	**79**	774.72
1.4276	**14**	137.29	4.7927	**47**	460.91	8.1578	**80**	784.53
1.5296	**15**	147.10	4.8946	**48**	470.72	8.2597	**81**	794.34
1.6316	**16**	156.91	4.9966	**49**	480.52	8.3617	**82**	804.14
1.7335	**17**	166.71	5.0986	**50**	490.33	8.4637	**83**	813.95
1.8355	**18**	176.52	5.2006	**51**	500.14	8.5656	**84**	823.76
1.9375	**19**	186.33	5.3025	**52**	509.94	8.6676	**85**	833.56
2.0394	**20**	196.13	5.4045	**53**	519.75	8.7696	**86**	843.37
2.1414	**21**	205.94	5.5065	**54**	529.56	8.8716	**87**	853.18
2.2434	**22**	215.75	5.6085	**55**	539.36	8.9735	**88**	862.98
2.3454	**23**	225.55	5.7104	**56**	549.17	9.0755	**89**	872.79
2.4473	**24**	235.36	5.8124	**57**	558.98	9.1775	**90**	882.60
2.5493	**25**	245.17	5.9144	**58**	568.78	9.2794	**91**	892.40
2.6513	**26**	254.97	6.0163	**59**	578.59	9.3814	**92**	902.21
2.7532	**27**	264.78	6.1183	**60**	588.40	9.4834	**93**	912.02
2.8552	**28**	274.59	6.2203	**61**	598.20	9.5854	**94**	921.82
2.9572	**29**	284.39	6.3223	**62**	608.01	9.6873	**95**	931.63
3.0592	**30**	294.20	6.4242	**63**	617.82	9.7893	**96**	941.44
3.1611	**31**	304.01	6.5262	**64**	627.62	9.8913	**97**	951.24
3.2631	**32**	313.81	6.6282	**65**	637.43	9.9932	**98**	961.05
3.3651	**33**	323.62	6.7302	**66**	647.24	10.0952	**99**	970.86

〔How to read the table〕 If for example you want to convert 10 kgf to N, find "10" in the middle column of the first set of columns on the right. Look in the N column directly to the right of "10," and you will see that 10 kgf equals 98.066 N. Oppositely, to convert 10 N to kgf, look in the kgf column to the right of "10" and you will see that 10 N equals 1.0197 kgf.

1kgf＝9.80665N
1N＝0.101972kgf

Appendix table 10: Inch-millimetre conversion table

inch		0"	1"	2"	3"	4"	5"	6"	7"	8"	9"
fraction	decimal										
			25.400	50.800	76.200	101.600	127.000	152.400	177.800	203.200	228.600
1/64	0.015625	0.397	25.797	51.197	76.597	101.997	127.397	152.797	178.197	203.597	228.997
1/32	0.031250	0.794	26.194	51.594	76.994	102.394	127.794	153.194	178.594	203.994	229.394
3/64	0.046875	1.191	26.591	51.991	77.391	102.791	128.191	153.591	178.991	204.391	229.791
1/16	0.062500	1.588	26.988	52.388	77.788	103.188	128.588	153.988	179.388	204.788	230.188
5/64	0.078125	1.984	27.384	52.784	78.184	103.584	128.984	154.384	179.784	205.184	230.584
3/32	0.093750	2.381	27.781	53.181	48.581	103.981	129.381	154.781	180.181	205.581	230.981
7/64	0.109375	2.778	28.178	53.578	78.978	104.378	129.778	155.178	180.578	205.978	231.378
1/ 8	0.125000	3.175	28.575	53.975	79.375	104.775	130.175	155.575	180.975	206.375	231.775
9/64	0.140625	3.572	28.972	54.372	79.772	105.172	130.572	155.972	181.372	206.772	232.172
5/32	0.156250	3.969	29.369	54.769	80.169	105.569	130.969	156.369	181.769	207.169	232.569
11/64	0.171875	4.366	29.766	55.166	80.566	105.966	131.366	156.766	182.166	207.566	232.966
3/16	0.187500	4.762	30.162	55.562	80.962	106.362	131.762	157.162	182.562	207.962	233.362
13/64	0.203125	5.159	30.559	55.959	81.359	106.759	132.159	157.559	182.959	208.359	233.759
7/32	0.218750	5.556	30.956	56.356	81.756	107.156	132.556	157.956	183.356	208.756	234.156
15/64	0.234375	5.953	31.353	56.753	82.153	107.553	132.953	158.353	183.753	209.153	234.553
1/ 4	0.250000	6.350	31.750	57.150	82.550	107.950	133.350	158.750	184.150	209.550	234.950
17/64	0.265625	6.747	32.147	57.547	82.947	108.347	133.747	159.147	184.547	209.947	235.347
9/32	0.281250	7.144	32.544	57.944	83.344	108.744	134.144	159.544	184.944	210.344	235.744
19/64	0.296875	7.541	32.941	58.341	83.741	109.141	134.541	159.941	185.341	210.741	236.141
5/16	0.312500	7.938	33.338	58.738	84.138	109.538	134.938	160.338	185.738	211.138	236.538
21/64	0.328125	8.334	33.734	59.134	84.534	109.934	135.334	160.734	186.134	211.534	236.934
11/32	0.343750	8.731	34.131	59.531	84.931	110.331	135.731	161.131	186.531	211.931	237.331
23/64	0.359375	9.128	34.528	59.928	85.328	110.728	136.128	161.528	186.928	212.328	237.728
3/ 8	0.375000	9.525	34.925	60.325	85.725	111.125	136.525	161.925	187.325	212.725	238.125
25/64	0.390625	9.922	35.322	60.722	86.122	111.522	136.922	162.322	187.722	213.122	238.522
13/32	0.406250	10.319	35.719	61.119	86.519	111.919	137.319	162.719	188.119	213.519	238.919
27/64	0.421875	10.716	36.116	61.516	86.916	112.316	137.716	163.116	188.516	213.916	239.316
7/16	0.437500	11.112	36.512	61.912	87.312	112.721	138.112	163.512	188.912	214.312	239.712
29/64	0.453125	11.509	36.909	62.309	87.709	113.109	138.509	163.909	189.309	214.709	240.109
15/32	0.468750	11.906	37.306	62.706	88.106	113.506	138.906	164.306	189.706	215.106	240.506
31/64	0.484375	12.303	37.703	63.103	88.503	113.903	139.303	164.703	190.103	215.503	240.903
1/ 2	0.500000	12.700	38.100	63.500	88.900	114.300	139.700	165.100	190.500	215.900	241.300
33/64	0.515625	13.097	38.497	63.897	89.297	114.697	140.097	165.497	190.897	216.297	241.697
17/32	0.531250	13.494	38.894	64.294	89.694	115.094	140.494	165.894	191.294	216.694	242.094
35/64	0.546875	13.891	39.291	64.691	90.091	115.491	140.891	166.291	191.691	217.091	242.491
9/16	0.562500	14.288	39.688	65.088	90.488	115.888	141.283	166.688	192.088	217.488	242.888
37/64	0.578125	14.684	40.084	65.484	90.884	116.284	141.684	167.084	192.484	217.884	243.284
19/32	0.593750	15.081	40.481	65.881	91.281	116.681	142.081	167.481	192.881	218.281	243.681
39/64	0.609375	15.478	40.878	66.278	91.678	117.078	142.478	167.878	193.278	218.678	244.078
5/ 8	0.625000	15.875	41.275	66.675	92.075	117.475	142.875	168.275	193.675	219.075	244.475
41/64	0.640625	16.272	41.672	67.072	92.472	117.872	143.272	168.672	194.072	219.472	244.872
21/32	0.656250	16.669	42.069	67.469	92.869	118.269	143.669	169.069	194.469	219.869	245.269
43/64	0.671875	17.066	42.466	67.866	93.266	118.666	144.066	169.466	194.866	220.266	245.666
11/16	0.687500	17.462	42.862	68.262	93.662	119.062	144.462	169.862	195.262	220.662	246.062
45/64	0.703125	17.859	43.259	68.659	94.059	119.459	144.859	170.259	195.659	221.056	246.459
23/32	0.718750	18.256	43.656	69.056	94.456	119.856	145.256	170.656	196.056	221.456	246.856
47/64	0.734375	18.653	44.053	69.453	94.853	120.253	145.653	171.053	196.453	221.853	247.253
3/ 4	0.750000	19.050	44.450	69.850	95.250	120.650	146.050	171.450	196.850	222.250	247.650
49/64	0.765625	19.447	44.847	70.247	95.647	121.047	146.447	171.847	197.247	222.647	248.047
25/32	0.781250	19.844	45.244	70.644	96.044	121.444	146.844	172.244	197.644	223.044	248.444
51/64	0.796875	20.241	45.641	71.041	96.441	121.841	147.241	172.641	198.041	223.441	248.841
13/16	0.812500	20.638	46.038	71.438	96.838	122.238	147.638	173.038	198.438	223.838	249.238
53/64	0.828125	21.034	46.434	71.834	97.234	122.634	148.034	173.434	198.834	224.234	249.634
27/32	0.843750	21.431	46.831	72.231	97.631	123.031	148.431	173.831	199.231	224.631	250.031
55/64	0.859375	21.828	47.228	72.628	98.028	123.428	148.828	174.228	199.628	225.028	250.428
7/ 8	0.875000	22.225	47.625	73.025	98.425	123.825	149.225	174.625	200.025	225.425	250.825
57/64	0.890625	22.622	48.022	73.422	98.822	124.222	149.622	175.022	200.422	225.822	251.222
39/32	0.906250	23.019	48.419	73.819	99.219	124.619	150.019	175.419	200.819	226.219	251.619
59/64	0.921875	23.416	48.816	74.216	99.616	125.016	150.416	175.816	201.216	226.616	252.016
15/16	0.937500	23.812	49.212	74.612	100.012	125.412	150.812	176.212	201.612	227.012	252.412
61/64	0.953125	24.209	49.609	75.009	100.409	125.809	151.209	176.609	202.009	227.409	252.809
31/32	0.968750	24.606	50.006	75406	100.806	126.206	151.606	177.006	202.406	227.806	253.206
63/64	0.984375	25.003	50.403	75.803	101.203	126.603	152.003	177.403	202.803	228.203	253.603

Appendix table 11: Hardness conversion table (reference)

Rockwell hardness	Picker's hardness	Brinell hardness		Rockwell hardness		Shore hardness
C scale 1471.0N {150kgf}		Standard steel balls	Tungsten carbide steel balls	A scale 588.4N {60kgf}	B scale 980.7N {100kgf}	
68	940			85.6		97
67	900			85.0		95
66	865			84.5		92
65	832		739	83.9		91
64	800		722	83.4		88
63	772		705	82.8		87
62	746		688	82.3		85
61	720		670	81.8		83
60	697		654	81.2		81
59	674		634	80.7		80
58	653		615	80.1		78
57	633		595	79.6		76
56	613		577	79.0		75
55	595	—	560	78.5		74
54	577	—	543	78.0		72
53	560	—	525	77.4		71
52	544	500	512	76.8		69
51	528	487	496	76.3		68
50	513	475	481	75.9		67
49	498	464	469	75.2		66
48	484	451	455	74.7		64
47	471	442	443	74.1		63
46	458	432	432	73.6		62
45	446	421	421	73.1		60
44	434	409	409	72.5		58
43	423	400	400	72.0		57
42	412	390	390	71.5		56
41	402	381	381	70.9		55
40	392	371	371	70.4	—	54
39	382	362	362	69.9	—	52
38	372	353	353	69.4	—	51
37	363	344	344	68.9	—	50
36	354	336	336	68.4	(109.0)	49
35	345	327	327	67.9	(108.5)	48
34	336	319	319	67.4	(108.0)	47
33	327	311	311	66.8	(107.5)	46
32	318	301	301	66.3	(107.0)	44
31	310	294	294	65.8	(106.0)	43
30	302	286	286	65.3	(105.5)	42
29	294	279	279	64.7	(104.5)	41
28	286	271	271	64.3	(104.0)	41
27	279	264	264	63.8	(103.0)	40
26	272	258	258	63.3	(102.5)	38
25	266	253	253	62.8	(101.5)	38
24	260	247	247	62.4	(101.0)	37
23	254	243	243	62.0	100.0	36
22	248	237	237	61.5	99.0	35
21	243	231	231	61.0	98.5	35
20	238	226	226	60.5	97.8	34
(18)	230	219	219	—	96.7	33
(16)	222	212	212	—	95.5	32
(14)	213	203	203	—	93.9	31
(12)	204	194	194	—	92.3	29
(10)	196	187	187		90.7	28
(8)	188	179	179		89.5	27
(6)	180	171	171		87.1	26
(4)	173	165	165		85.5	25
(2)	166	158	158		83.5	24
(0)	160	152	152		81.7	24

Note 1: Quoted from hardness conversion table (SAE J417)

Appendix table 12: Greek alphabet list

Upright	Italic		Reading
Upper case	Upper case	Lower case	
Α	*Α*	α	Alpha
Β	*Β*	β	Beta
Γ	*Γ*	γ	Gamma
Δ	*Δ*	δ	Delta
Ε	*Ε*	ε	Epsilon
Ζ	*Ζ*	ζ	Zeta
Η	*Η*	η	Eta
Θ	*Θ*	θ	Theta
Ι	*Ι*	ι	Iota
Κ	*Κ*	κ	Kappa
Λ	*Λ*	λ	Lambda
Μ	*Μ*	μ	Mu
Ν	*Ν*	ν	Nu
Ξ	*Ξ*	ξ	Xi
Ο	*Ο*	ο	Omicron
Π	*Π*	π	Pi
Ρ	*Ρ*	ρ	Rho
Σ	*Σ*	σ	Sigma
Τ	*Τ*	τ	Tau
Υ	*Υ*	υ	Upsolon
Φ	*Φ*	φ	Phi
Χ	*Χ*	χ	Khi
Ψ	*Ψ*	ψ	Psi
Ω	*Ω*	ω	Omega